TRW

Total Ozone Mapping Spectrometer Earth Probe (TOMS-EP)

# Critical Design Review Data Package

Day 3
5 August 1992

CDRL No. SE-22
Contract No. NAS5-31488

THIS MATERIAL WAS DEVELOPED UNDER CONTRACT NAS5-31488 AND MAY BE REPRODUCED BY AND/OR FOR THE U.S. GOVERNMENT PURSUANT TO FAR CLAUSE 52.227-14 (JUNE 1987).

COPYRIGHT © 1992 TRW, INC.

# TOMS-EP CDR Agenda
# Day 1 3 August 1992

| Time | Subject | Presenter |
|---|---|---|
| 8:00 | **Mission Objectives** | |
| 8:30 | **Project Overview** | D. Stager |
| | PDR Actions/Open Issues | |
| | Subcontractors | R. Hlavaty |
| | Performance Assurance Implementation | E. Starr |
| 9:30 | **Key Requirements Vs. Capabilities** | B. Dobrotin |
| 10:30 | **System Implementation** | |
| | System Description | B. Dobrotin |
| | System Design Integration: | |
| | Mechanical Integration | D. Nicolson |
| | Electrical Integration, Command and Telemetry | W. Jhang |
| 12:00 | LUNCH | |
| 1:00 | **Interfaces:** | |
| | Launch Vehicle Interfaces and Integration | J. Giglio |
| | Spacecraft Bus to Instrument | B. Dobrotin |
| | Spacecraft/Ground | T. Watson |
| 2:30 | **Spacecraft Modes/Redundancy Management** | L. Fesq |
| 3:30 | **System Performance** | |
| | Mass Properties | L. Petty |
| | Alignment Budgets | W. Akle |
| | Electrical Power Energy Balance | D. Muleady |

# TOMS-EP CDR Agenda
# Day 2 4 August 1992

| Time | Subject | Presenter |
|---|---|---|
| 8:00 | **TRW Eagle Test Bed (ETB) - M2 High Bay** | T. Petersen |
| | **Subsystem Design and Verification** | |
| 9:00 | Structure and Mechanisms Subsystem (SMS) | J. Castan |
| 10:00 | Thermal Subsystem | D. Wanous |
| 11:00 | Orbit Adjust Subsystem (OAS) | A. Alicastro |
| 12:00 | LUNCH | |
| 1:00 | Communications and Data Handling Subsystem (C&DHS) | J. Kinney |
| 2:00 | Electrical Power & Distribution Subsystem (EPDS) | S. Foroozan |
| 3:00 | Attitude Control and Determination Subsystem (ACDS) | H. Schmeichel |
| 4:00 | Flight Software | D. Stuart |

# TOMS-EP CDR Agenda
# Day 3 5 August 1992

| Time | Subject | Presenter |
|---|---|---|
| 8:00 | **System Verification** | B. Dobrotin |
| 8:30 | Spacecraft Verification | J. Giglio |
| 9:30 | EMC/EMI Verification | R. Bal |
| | **Spacecraft Integration, Test, Launch and Mission Operations** | |
| 10:30 | System Integration, Test and Launch | J. Durschinger |
| 12:00 | LUNCH | |
| 1:00 | Mission Operations | T. Watson |
| 2:00 | **Performance Assurance** | E. Starr |
| 2:15 | Reliability/FMEA | W. Woerner |
| 2:40 | System Safety | D. McGraw |
| 3:10 | Contamination Control | K. Henderson |
| 3:40 | Materials and Processes | M. Hirsch |
| 4:05 | EEE Parts | G. Penney |
| 4:50 | Hardware Quality Assurance | L. Irwin |
| 5:15 | Software Quality Assurance | G. Walsh |

# TOMS-EP
# System Verification

B. Dobrotin

# Verification Objective

- Assure that the TOMS-EP hardware and software meet the requirements of the system specification per NASA/GSFC GEVS

- Presentation of TRW approach is in three parts:
  - That which is done on ETB
  - Total spacecraft verification program
  - EMC/EMI details

# Eagle Test Bed Verification Approach

- Verify at most cost effective level of assembly
- Verify on Eagle Test Bed instead of Spacecraft System I&T
- Thorough ETB integration and checkout provide assurance of successful TOMS-EP verification

# TOMS-EP Eagle Test Bed Use

- STM qualification to TOMS-EP structural requirements
  - TRW funded
- Verify subsystem operation prior to I&T
  - TFS verification (include LFBT)
  - SAR operational verification
  - EMC testing

# TOMS-EP Structural Verification

- Structural dynamic loads analyses, verification data
- Initial separation shock environment data
- Array hinge performance verification data
- Solar array structural performance verification data
- Alignment stability data

# Structural Test Model (STM) Test Flow

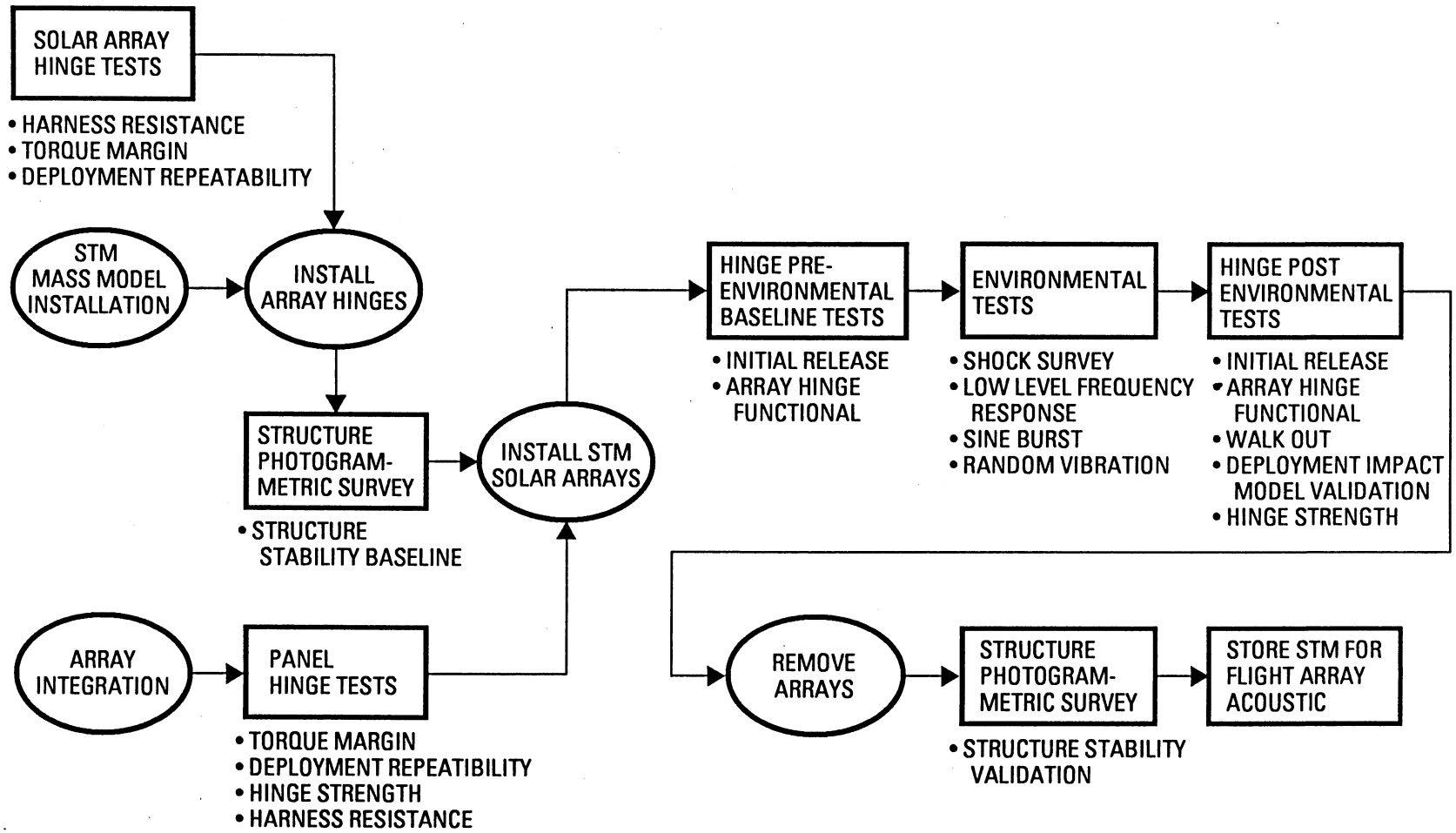

# TOMS-EP/ETB Subsystem Verification

- ACDS LFBT
  - Verification is to simulation results

- EPDS Dynamic Performance Verification
  - Verifies integrated operation:

    Hardware: ARM

    Software: Charge control

- TFS øB Verification
  - Verification to Software Requirements Specification
  - Primary focus on hardware/software integration

# ETB Integration Testing Provides High Confidence for TOMS-EP Verification

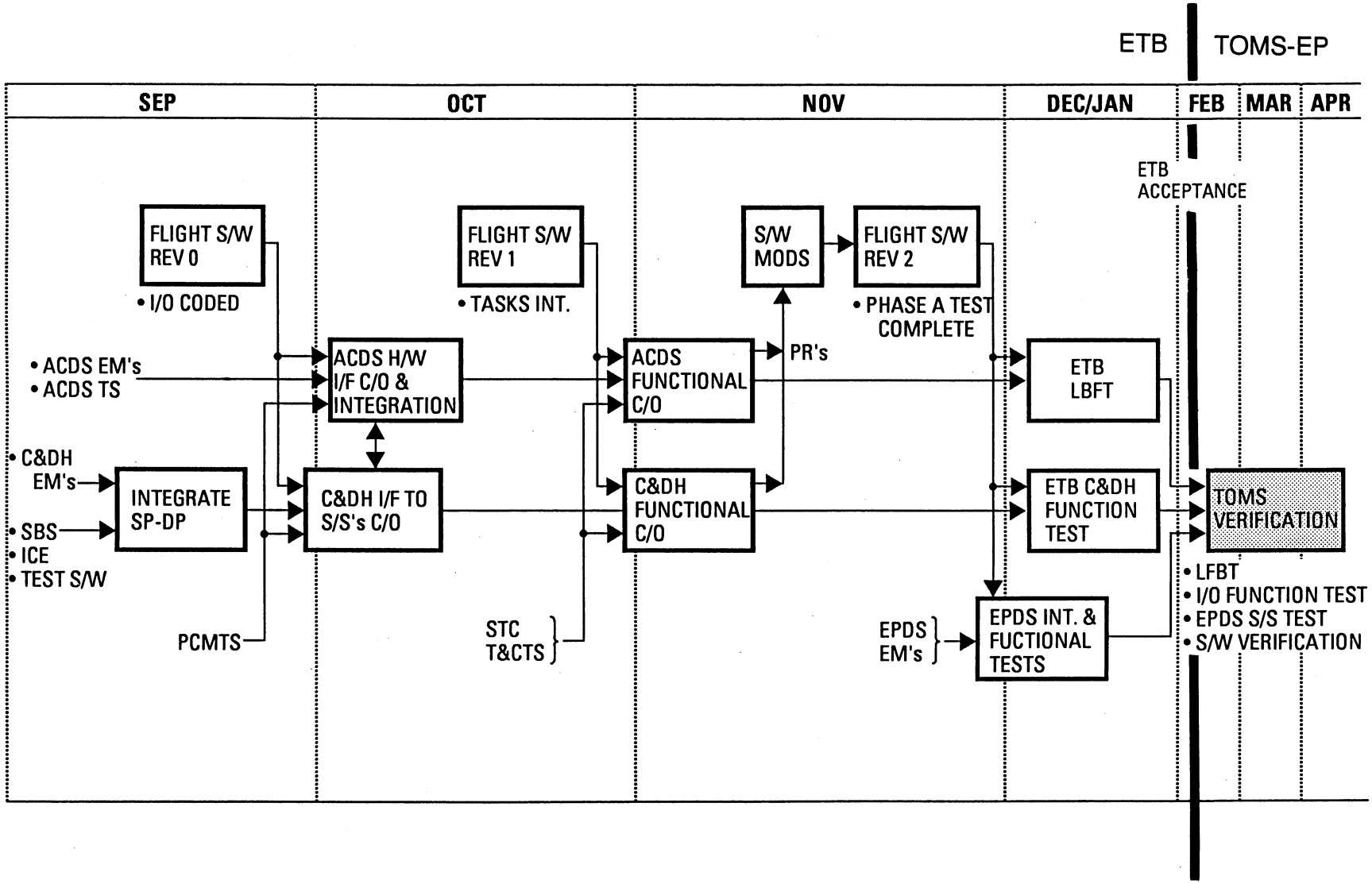

# TOMS-EP/ETB EMC Testing

- Perform all conducted emissions testing on ETB
- Specific tests:
  - Primary bus ripple
  - Equipment switching transients
  - Conducted susceptibility
- Provides characterization of noise on power and signal lines
  - Validation of SEMCAP analysis

# TOMS-EP
# Spacecraft Verification

John Giglio

TRW

## VERIFICATION OBJECTIVE:

- ASSURE THAT THE TOMS-EP HARDWARE AND SOFTWARE MEET THE REQUIREMENTS OF THE SPECIFICATIONS

## VERIFICATION APPROACH

- VERIFY PROTOFLIGHT HARDWARE
- VERIFY AT MOST COST EFFECTIVE LEVEL OF ASSEMBLY
- GAIN EARLY DESIGN CONFIDENCE BY USING EAGLE TEST BED
- USE PREVIOUSLY QUALIFIED AND FLOWN HARDWARE WHERE POSSIBLE

# VERIFICATION METHODOLOGY

- ESTABLISH AND FLOWDOWN VERIFICATION REQUIREMENTS

- DEFINE METHODS FOR VERIFICATION OF REQUIREMENTS

  - TEST
  - ANALYSIS
  - DEMONSTRATION
  - INSPECTION

- DOCUMENT VERIFICATION METHODS IN VERIFICATION MATRICIES IN APPROPRIATE SPECIFICATIONS

- ESTABLISH VERIFICATION REQUIREMENTS TRACEABILITY TO SUPPORT S/C SELL-OFF

# Verification Process Flow

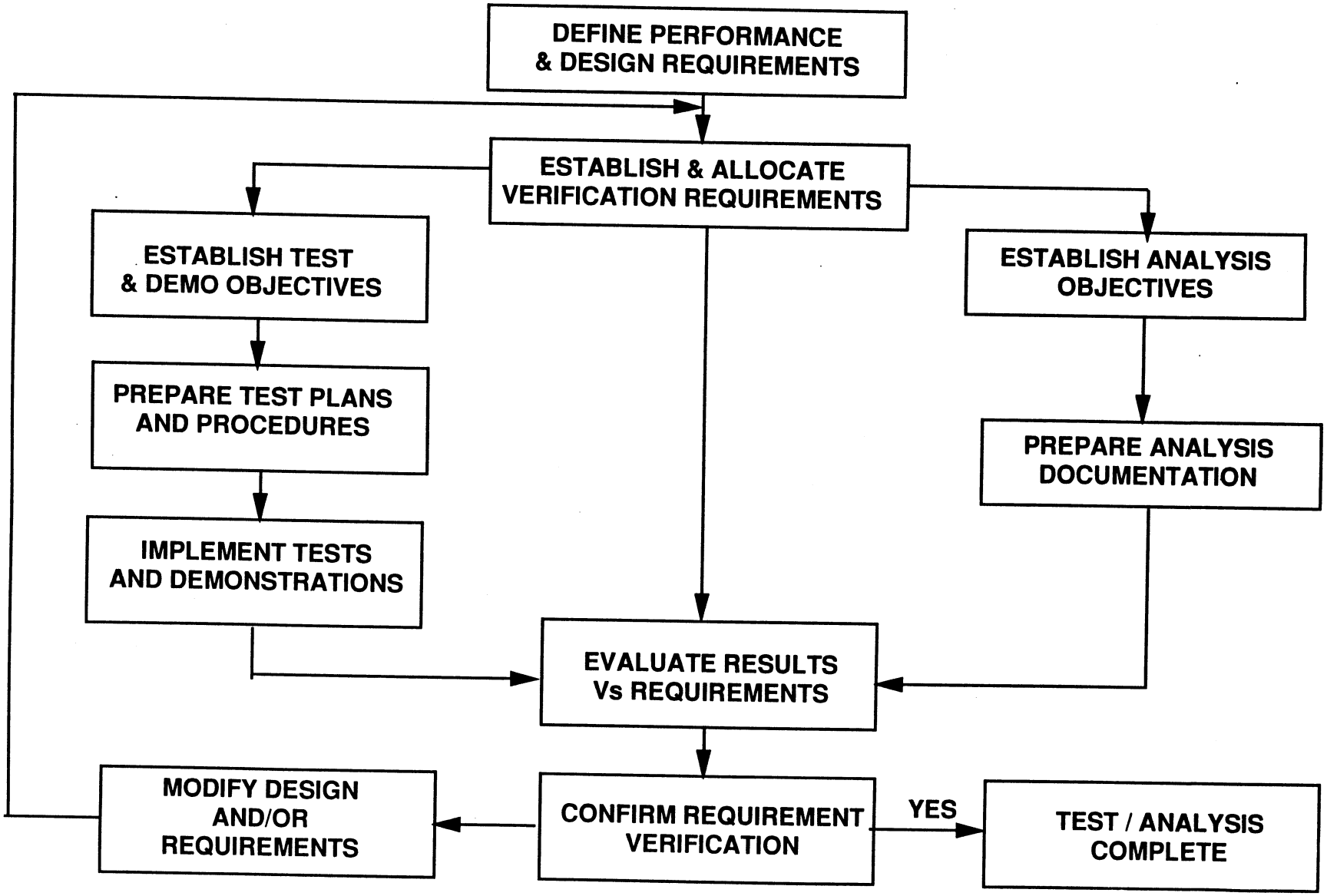

# Verification Requirements Flowdown

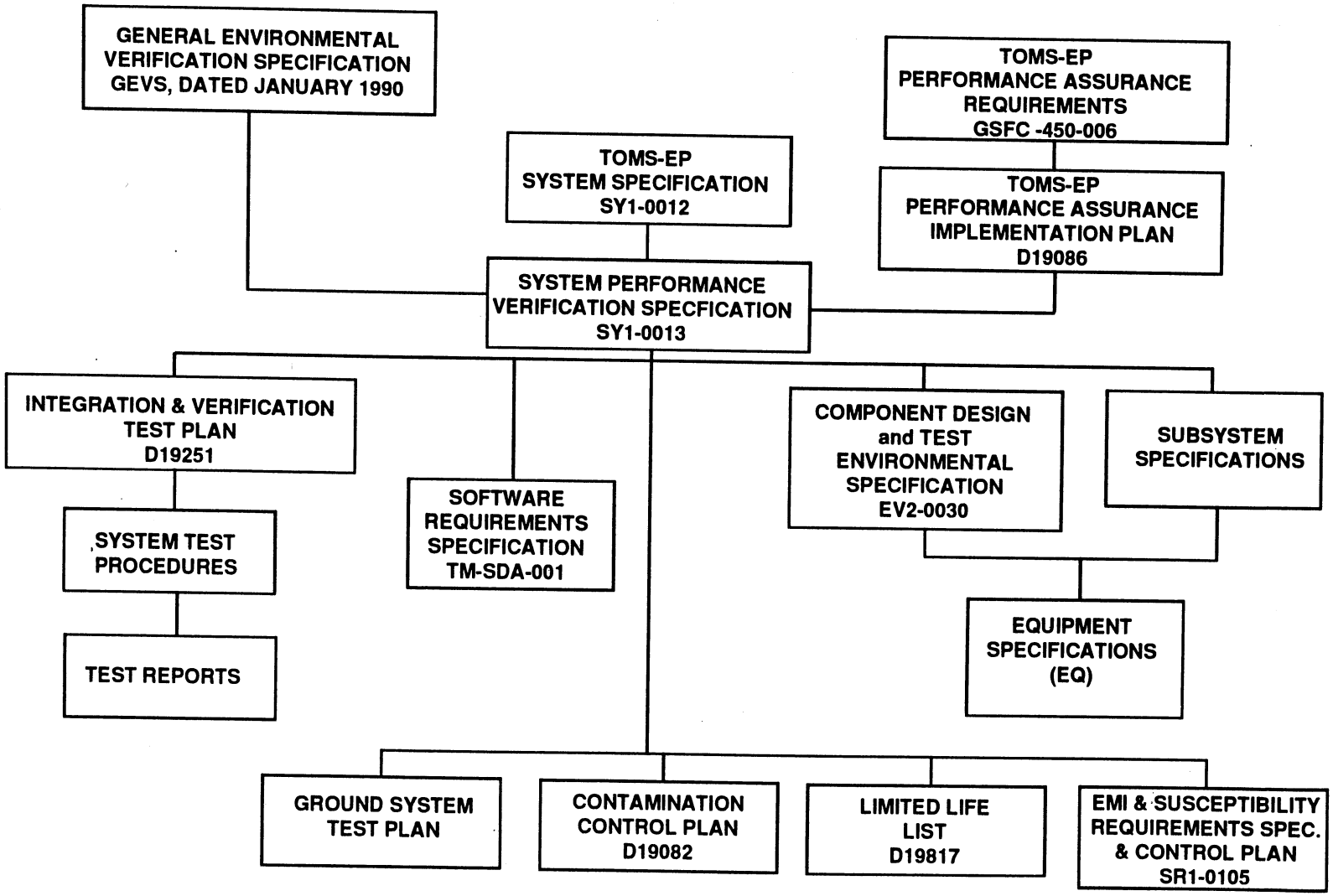

TRW

# VERIFICATION TOOLS

- SYSTEM VERIFICATION MATRIX (APPENDIX B, SY1-0013)
  DEFINES VERIFICATION METHODS AND RESPONSIBILITIES
- VERIFICATION TEST MATRIX (SY1-0013 AND IV&T PLAN D19251)
  DEFINES SYSTEM AND COMPONENT LEVEL TEST REQUIREMENTS
- VERIFICATION TRACEABILITY MATRIX ( DATABASE MAINTAINED BY SE)
  (TO BE COMPLETED 45 DAYS AFTER CDR)
  DEFINES VERIFICATION REQUIREMENTS AND METHODS TRACEABILITY
- GEVS TO TOMS-EP TRACEABILITY MATRIX (APPENDIX A, SY1-0013)
  PROVIDES TRACEABILITY OF REQUIREMENTS AND APPROACH FOR VERIFICATION

# System Verification Matrix Example

| SY1-0012 Paragraph No. | SY1-0012 Paragraph Title | Verification Method | | | | Traceability To GSFC 450-005 | Verification Documentation |
|---|---|---|---|---|---|---|---|
| | | T | A | I | D | | |
| 3 | REQUIREMENTS | | | | | Title only | |
| | | | | | | | |
| 3.1 | ITEM DEFINITION | | | | | Definition | |
| 3.1.1 | Prime Item Diagram | | | | | Description | |
| 3.1.2 | Spacecraft Bus Interfaces | | | | | Title only | |
| 3.1.2.1 | TOMS-EP to SELV Intfc Requirements | | | x | | 5.1.1, 7.0 | Inspection of records |
| 3.1.2.1.1 | Spacecraft Envelope | | | x | | 5.1.1, 7.1 | Inspection of interface drawings |
| 3.1.2.1.2 | Umbilical Interface | | | x | | 5.1.1, 7.2 | Inspection of drawings |
| 3.1.2.1.3 | Payload Attach Fitting (PAF) | | | x | | 6.1.1, 7.1 | Inspection of drawings |
| 3.1.2.1.4 | Launch and Separation Loads | X | x | | | 6.1.2 | Test, loads analysis |
| 3.1.2.1.5 | Spacecraft Stowed Balance | x | x | | | 6.1.3 | Mass properties analysis - weight and balance test |
| 3.1.2.1.6 | Separation Conditions | | x | | | 5.1.1, 7.3 | Spacecraft Mode Definition D19829 |
| 3.1.2.1.7 | Spacecraft Separation Signal | | | x | | 5.1.1 | Inspection of interface drawings |
| 3.1.2.1.8 | Spacecraft to SELV Ops. Interfaces | X | X | X | | 5.1.1 | Pegasus to S/C ICD |
| 3.1.2.2 | TOMS Instrument Interfaces | | | x | | 4.1.2, 5.1.12 | Inspection of drawings, ICDs, specifications |
| 3.1.2.2.1 | Pointing | | x | | | 5.2.1, 5.2.2, 5.2.3 | Alignment Budgets D19254 |
| 3.1.2.2.2 | Instrument FOVs | | x | | | 5.2.4 | Alignment Budgets D19254 |
| 3.1.2.2.3 | Instrument Power State | x | x | x | | 4.1.6, 6.2.4 | Mode Description (D19829), s/w test, instr test |
| 3.1.2.2.4 | Sun Avoidance | x | x | | | 4.1.7 | Software testing, Mode Description |
| 3.1.2.2.5 | Instrument Weight and CG | | x | | | 6.1.3 | Structural analysis, mass properties analysis |
| 3.1.2.2.6 | Instrument-to-Spacecraft Alignment | x | | | | 5.2.2 | Installation/alignment |
| 3.1.2.2.7 | Instrument Access | | | x | | 5.2.5 | Inspection of drawings |
| 3.1.2.2.8 | Instrument Mechanical Accomodation | | | x | | 5.2 | Inspection of drawings |
| 3.1.2.2.9 | Instrument Power Requirements | x | x | | | 6.2.2, 6.2.3 | Integration test, power analysis |
| 3.1.2.2.10 | Instrument Thermal Requirements | | x | | | 6.3 a & b | Thermal analysis |
| 3.1.2.2.11 | Instrument Command and Telemetry | x | x | | | 5.1.5, 6.4.1 | Software testing, C&DH analysis |
| 3.1.2.2.12 | Magnetics | x | x | | | 8.3 | EMC analysis, EMC test |
| 3.1.2.3 | Flt Segment to Gnd Segment Interface | x | x | | | 4.1.4, 9.5, 6.5.1.2 | Comm analysis, End-to-end test |
| 3.1.2.3.1 | Ground-to-Space Command Format | x | | | | 4.1.4 | End-to-end test |
| 3.1.2.3.2 | Space-to-Ground Telemetry Formats | x | | | | 4.1.4 | End-to-end test |
| 3.1.2.3.3 | Space-to-Ground Ops. Interfaces | x | | | | 4.1.4 | End-to-end test |
| 3.1.2.4 | POCC GSE/Spacecraft GSE Interfaces | x | | | | 4.1.4, 9.4 | End-to-end test |

# Verification Test Matrix Example

- **DOCUMENTED IN SY1-0013 AND FLOWED DOWN TO IV&T PLAN D19251**

**LEGEND**

LEVEL OF ASSEMBLY:
S/C- SPACECRAFT
I - INSTRUMENT
S - SUBSYSTEM
C - COMPONENT

UNIT TYPE:
PT - PROTOTYPE
PF - PROTOFLIGHT
F - FLIGHT
S - SPARE
EM -ENGRG. MODEL

QUALIFICATION STATUS:
1. COMPLETE QUALIFICATION REQUIRED
2. PARTIAL QUALIFICATION REQUIRED (SEE REMARKS)
3. QUALIFIED BY USE ON PRIOR PROGRAM (SEE REMARKS)
4. OTHERWISE QUALIFIED (SEE REMARKS)
5.QUALIFIED ON TOMS-EP
N/A NOT APPLICABLE

| HARDWARE SPECIFICATION | | | | | | QUALIFICATION TESTS | | | | | | | | | | | | | |
|---|---|---|---|---|---|---|---|---|---|---|---|---|---|---|---|---|---|---|---|
| LEVEL OF ASSY | ITEM | S/N | UNIT TYPE | SUPPLIER | QUAL STATUS | FUNCTIONAL | EMC/EMI (REFER TO NOTE 1) | ACOUSTICS | VIBRATION (3Axis Random) | LOW LEVEL VIBRATION | PYRO SHOCK (ACTUATIONS) | SINE BURST | THERMAL VACUUM (CYCLES) | THERMAL BALANCE S/C Level | THERMAL CYCLES (MINIMUM) | PROOF | LEAK | BURN-IN (REFER TO NOTE 2) | HOT FIRE |
| S/C | SPACECRAFT (SEE NOTE 3) | FLT-1 | PF | TRW/GFE | 1 | X | X | | X | | 2 | X | 6 | X | | | X | | |
| S | STRUCTURAL TEST MODEL | STM | PT | TRW | 1 | | | | | X | | X | | | | | | | |
| C | SOLAR ARRAY HINGE ASSEMBLY | STM | PT | TRW | 1 | X | | | | | | | | | | | | | |
| C | ALL SOLAR ARRAY HINGE ASSY. FLIGHT UNI | FLT-1 | F | | 5 | | | | | | | | | | | | | | |
| C | SOLAR ARRAY RELEASE MECHANISMS | FLT-1 | F | | 1 | X | | | X | | | | | | 16 | | | | |
| | | | | | | | | | | | | | | | | | | | |

# GEVS Traceability Matrix Example (Appendix A, SY1-0013)

LEGEND:
X - COMPLIANCE
E - EXCEPTION, WAIVER REQUIRED

NOTES:
1- NO ANALYSIS OR TEST PLANNED
2-ANALYSIS ONLY, NO TESTING PLANNED

| GEVS Reqmt. Para. Number | TITLE | SY1-0013 Reference No. | EV2-0030 Reference No. | Level of Verif: System | Subsystem | Structural Test Model | Component | Eagle Test Bed | COMMENTS | REFERENCE DOCUMENTS |
|---|---|---|---|---|---|---|---|---|---|---|
| 2.3.3 | Limited Performance Tests | 4.3.1 | 1.2.1.3 | X | | | X | | | |
| 2.3.4 | Failure Free Performance | 4.5 | N/A | X | | | | | | D119251 |
| 2.3.5 | Limited Life Electrical Elements | 4.6 | 3.1.6 | | | | X | | Limited life items are defined in D19817 | D19817 (CDRL PA-12) |
| 2.4 | Structural & Mechanical Verif. | | | | | | | | | |
| 2.4.1 | Structural Loads Qualification | | | | | | | | Introduction | |
| 2.4.1.1 | Analysis | | | | | | | | Discussion | |
| 2.4.1.2 | Modal Survey | 4.1 | N/A | X | | X | | | Finite Element Model & STM Testing | CDRL SS1-0021 |
| 2.4.1.3 | Design Strength Qual Test | 4.7.2 | N/A | | | X | | | Limited Response Test | |
| 2.4.1.4 | Structural Reliability | 4.7.3 | N/A | x | | x | | | Sine Burst and Selected Pull Testing | |
| | | 4.7.4 | N/A | X | | | | | Sine Burst | |
| 2.4.1.5 | Acceptance Requirements | | | | | | X | | Fracture Mechanics Aanalysis OAS Tank | |
| 2.4.2 | Vibroacoustics Qualification | | | X | | | | | | |
| 2.4.2.1 | Fatigue Life Considerations | 3.1.4 | 3.1.3.2 | (E) | | | X | | Acoustic on Solar Array Only | |
| 2.4.2.2 | Payload Acoustic Test | | | | | | | | Not Applicable | |
| 2.4.2.3 | Payload Vibration Tests | 3.1.4, 4.7 | 3.1.3.2 | (E) | | | X | | Solar Array Only | |
| 2.4.2.3 (a) | Lift-Off Random Vibration | 3.1.4, 4.7 | 4.3 | X | | | | | | |
| 2.4.2.3 (b) | Additional Vibration Testing | 3.1.4, 4.7 | 4.3 | X | | | | | | |
| 2.4.2.3 (c) | Performance | | | | | | | | Not Required | |
| 2.4.2.4 | Subsystem Vibroacoustic Tests | 4.7.5.1 | 4.3 | X | | | X | | | |
| 2.4.2.5 | Component Vibroacoustic Tests | | | | | | | | Not Required | |
| 2.4.2.5 (a) | Random Vibration | | | | | | | | Introduction | |
| 2.4.2.5 (b) | Acoustic Test | 3.3 | 3.1.3.1 | | | | X | | | |
| 2.4.2.5 (c) | Additional Vibration Testing | 3.3 | 3.1.3.2 | (E) | | | X | | Solar Array Only | |
| 2.4.2.5 (d) | Performance | | | | | | | | Not Required | |
| 2.4.2.6 | Acceptance Requirements | 4.7.5.1 | 4.3 | | | | X | | | |
| . | Retest of Reflight Hardware | | 3.1.3.1, 3.1.3.2 | | | | X | | | |
| 2.4..3 | Mechanical Shock Verification | | | | | | | | Not Applicable | |
| 2.4.3.1 | Subsystem Mechanical Shock Tests | | | | | | | | Introduction | |
| 2.4.3.1 (a) | Self-Induced Shock | N/A | N/A | X | | | | | S/C level per GEVS paragraph 2.4.3.2 | |
| 2.4.3.1 (b) | Externally Induced Shock | N/A | N/A | X | | | | | S/C level per GEVS paragraph 2.4.3.2 | |
| 2.4.3.1 (c) | STS Shock Environment | N/A | N/A | X | | | | | S/C level per GEVS paragraph 2.4.3.2 | |
| 2.4.3.1 (d) | Test Setup | | | | | | | | Not Applicable | |
| 2.4.3.1 (e) | Performance | N/A | N/A | X | | | | | S/C level per GEVS paragraph 2.4.3.2 | |
| | | N/A | N/A | X | | | | | S/C level per GEVS paragraph 2.4.3.2 | |

# Major Verification Analyses

- STRUCTUARAL DYNAMIC MODEL (VALIDATED ON STM)
- THERMAL ANALYTICAL MODEL (VALIDATED BY SPACECRAFT THERMAL BALANCE)
- COMMAND and DATA HANDLING ANALYSIS
- ATTITUDE CONTROL and DETERMINATION ANALYSIS
- ORBITAL ADJUST SUBSYSTEM ANALYSIS
- ALIGNMENT ANALYSIS
- CONTAMINATION ANALYSIS
- EMC ANALYSIS
- SAFETY ANALYSIS ( CURRENTLY ACCIDENT RISK ASSESSMENT ANALYSIS)

TRW

# Environmental Design Requirements

- **Minimum Natural Frequencies**
  - SPACECRAFT > 20 Hz (PEGASUS REQUIREMENT)
  - COMPONENTS LESS THAN 30 POUNDS > 100 Hz (DERIVED)
  - COMPONENTS GREATER THAN 30 POUNDS > 40 Hz (DERIVED)
  - SOLAR ARRAY (STOWED) > 22 Hz (DERIVED)

- **Acoustics**
  (DERIVED)

| Frequency (Hz) | 1/3 Octave Sound Pressure Level (dB) |
|---|---|
| Overall | 134.2 |

- **Design Limit Loads Derived From Pegasus Interface Loads Specified In Contract**

| Component and Event | Pegasus XL-C L1011 Aircraft | |
|---|---|---|
| | Axial, $Z_{s/c}$ | Lateral |
| Spacecraft Structure | | |
| Captive Flight Release (CFR) | ± 1 | ±4.5, $-X_{s/c}$<br>±1, $Y_{s/c}$ |
| Aerodynamic Pull-up | -3.65±.35 | 2.4±.5, $-X_{s/c}$<br>±1.5, $Y_{s/c}$ |
| Abort Landing | ±0.6 | 2.8±.1, $-X_{s/c}$<br>±0.6, $Y_{s/c}$ |
| 1st Stage Burnout | -8.5±1 | ±1.2 |
| 2nd Stage Burnout | -11.5±1 | ±1.2 |
| 3rd Stage Burnout | -9.5±1 | ±1.2 |
| Platforms | | |
| Nadir (CFR) | ± 1 | ±4.5, $-X_{s/c}$<br>±1, $Y_{s/c}$ |
| Middle (CFR) | ± 1 | ±4.5, $-X_{s/c}$<br>±1, $Y_{s/c}$ |
| OAS (CFR) | ± 1 | ±4.0, $-X_{s/c}$<br>±1, $Y_{s/c}$ |
| Powered Flight* (PF) (All Platforms) | -11.5±2.5 | ± 2 |

TRW

# Environmental Design Requirements (Continued)

- **Random Vibration Requirement (Revised GEVS Values For Pegasus)**

| Frequency (Hz) | ASD Level ( $G^2$ / Hz) | |
|---|---|---|
| | Protoflight | Acceptance |
| 20 to 100 | 0.005 | 0.0025 |
| 100 to 200 | +6dB/octave | -6dB/octave |
| 200 to 1250 | 0.02 | 0.01 |
| 1250 to 2000 | -6dB/octave | -6dB/octave |
| Overall level | 5.6 Grms | 4.0 Grms |

TRW

## Shock Environment Issue

- CURRENT CONTRACT SHOCK ENVIRONMENT AND PEGASUS SEPARATION TEST DATA DO NOT AGREE
- ANALYSIS TO COMPARE CONTRACT VALUES AND PEGASUS TEST DATA WITH S/C ATTENUATION WAS DONE
- RESULTS INDICATE COMPONENT REQUIREMENT FOR HARDWARE ON MID-PLATFORM IS PROBABLY ACCEPTABLE
- OAS PLATFORM HAS SMALL ATTENUATION AND SHOCK TESTING ON SELECTED OAS COMPONENTS IS PLANNED
- FINAL ASSESSMENT OF PEGASUS TEST VALUES ON THE TOMS-EP DESIGN IS PENDING COMPLETION OF THE SHOCK SURVEY PLANNED FOR THE STM IN SEPTEMBER

- **Launch Vehicle Separation Shock Comparison**

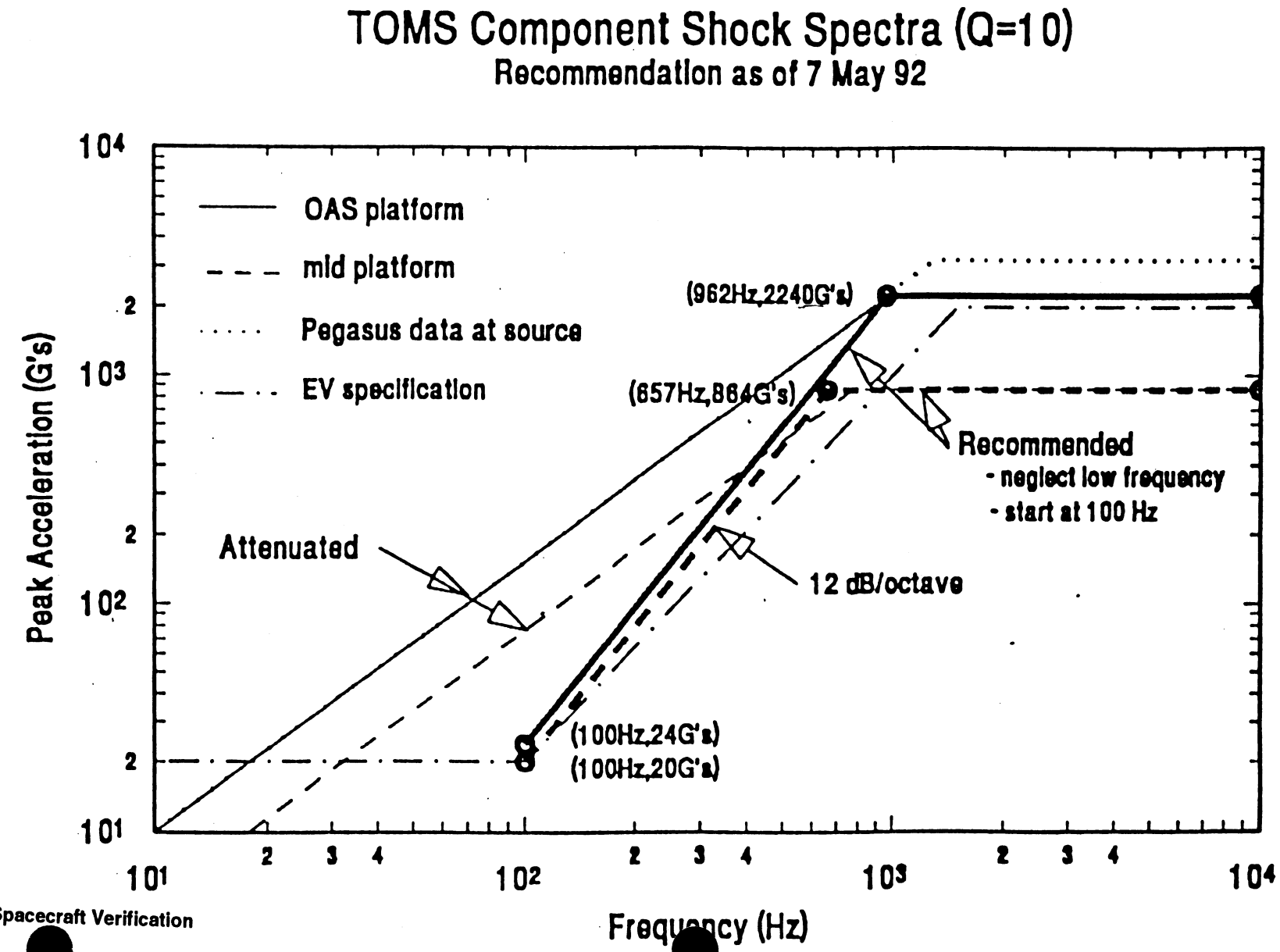

# Component Verification Versus Requirements (EV2-0030)

| Requirement | Verification |
|---|---|
| • RANDOM VIBRATION | 3 AXIS - PROTOFLIGHT LEVELS |
| • ACOUSTICS | SOLAR ARRAY ONLY |
| • DESIGN STRENGTH | - ANALYSIS AT COMPONENT LEVEL<br>- SINE BURST AT SPACECRAFT LEVEL<br>- EQUIPMENT MUST PERFORM TO SPEC. FOLLOWING ENVIRONMENT |
| • THERMAL VACUUM | - 8 CYCLES RF EQUIPMENT ONLY<br>- 6 CYCLES AT S/C LEVEL SATISFIES T/V FOR OTHER COMPONENTS |
| • THERMAL CYCLING | NON-RF EQUIPMENT - 16 CYCLES AMBIENT PRESSURE PROTOFLIGHT TEMPERATURES |
| • SHOCK | - ANALYSIS AT COMPONENT LEVEL, EXCEPT BATTERY<br>- TEST DEFERRED TO SPACECRAFT STM SURVEY TO MINIMIZE RISK |
| • PERFORMANCE | - AS DEFINED BY EQ SPECIFICATIONS |
| • BURN-IN | - 300 HOURS OF OPERATING TIME PRIOR TO DELIVERY |

# Spacecraft Verification Versus GEVS Requirements

| GEVS Requirement | Verification |
|---|---|
| • COMPREHENSIVE PERFORMANCE TESTS | 3 PLANNED - ONE AS BASELINE<br>ONE HOT - ONE COLD DURING THERMAL VAC. |
| • ACOUSTICS | PERFORMED ON SOLAR ARRAY ONLY. WAIVER REQUEST FOR SPACECRAFT LEVEL TEST. |
| • RANDOM VIBRATION | 3-AXIS PROTOFLIGHT LEVELS |
| • DESIGN STRENGTH And STRUCTURAL RELIABILITY | - FIXED FREQUENCY SINE TEST OF STM FOR PRIMARY STRUCTURE<br>- REPEATED AT SPACECRAFT LEVEL FOR FLIGHT HARDWARE |
| • DYNAMIC MODEL VALIDATION | LOW LEVEL VIBRATION ON STM |
| • SEPARATION SHOCK | 2 FIRINGS OF TEST PAYLOAD ADAPTER SUPPLIED BY OSC |
| • THERMAL VACUUM | - 6 CYCLES AT SPACECRAFT LEVEL<br>- ONE CYCLE USED FOR THERMAL BALANCE TO VALIDATE THERMAL MODEL |

TRW

## Spacecraft Verification Versus Requirements (Continued)

| GEVS Requirement | Verification |
|---|---|
| • INTERFACE ELECTRICAL TESTS | |
| - SPACECRAFT | PRIMARY POWER FAULT TESTING |
| - INSTRUMENT | S/C I/F TEST WITH INSTRUMENT SIMULATOR |
| | INSTRUMENT TEST AT ASSOCIATE CONTRACTOR WITH S/C SIMULATOR |
| | S/C LEVEL FUNCTIONAL TEST DURING I & T |
| - LAUNCH VEHICLE | S/C SIDE WITH EGSE IN SIMULATED PRE-LAUNCH & LAUNCH CONDITIONS |
| - UNIT LEVEL | UNIT TEST SETS |

TRW

# Mechanical Function Verification Versus GEVS Requirements

| GEVS Requirement | Verification |
| --- | --- |
| • COMBINATION OF ANALYSIS & TEST | • KINEMATIC ANALYSIS FOR ADVERSE EFFECTS OF TOL. BUILD-UP, THERMAL DISTORTIONS, MISALIGNMENTS, STATIC/DYNAMIC DISPLACEMENTS |
| | • TESTS:<br>HARNESS COLD TEMP RESISTANCE AND STORAGE<br><br>TORQUE ANGLE MEASUREMENTS<br><br>CLEARANCE VALIDATION (WALKOUT OF ARRAY THRU FULL DEPLOYMENT)<br><br>NITINOL RELEASE (1ST MOTION) PRE AND POST ENVIRONMENT<br><br>LOADS VERIFIED BY DYNAMIC TEST AND SELECTED PULL TEST FOR HINGE ASSEMBLY |

TRW

# Spacecraft Verification Versus GEVS Requirements (Continued)

| GEVS Requirement | Verification |
| --- | --- |
| • EMC/EMI | RADIATED SUSCEPTIBILITY TESTING AT THE S/C LEVEL<br>- CONDUCTED EMISSIONS AND SUSCEPTIBILITY AT COMPONENT LEVEL ON THE ETB<br>- ANALYSIS AT COMPONENT LEVEL |
| • 100 HOURS OF FAILURE FREE PERFORMANCE | MAINTAIN SYSTEM POWERED-ON RECORDS DURING I & T |
| • LEAK TEST | OAS DURING I&T PROCESS |

# Software Verification Overview

| Test Location | Test Name | Tested Items | | | | | | | | |
|---|---|---|---|---|---|---|---|---|---|---|
| | | HW/SW Interfaces | ACDS Functions | EPDS Functions | Software Cmds, Hardware Cmds | Stored Cmd Processing | Telemetry Processing, Playback | Fault Detection, SP Wake-up Logic | Pre-Defined RTCSs (App D) | KPD Contents (App E) |
| TRW/ CSEO | TFS Function-Level Test | | X | X | X | X | X | X | | |
| | TFS Verification Phase A Test | | | | X | X | part | part | | Ops part |
| Space Park ETB | ACDS Software Verification Test | | X | | | | | part | | ACDS part |
| | EPDS Software Verification Test | | | X | | | | part | | EPDS part |
| | TFS Verification Phase B Test | X | | | X | | X | X | | Ops part |
| I&T | System Test | | part | part | X | | | | X | |

# Major Deviations Required For GEVS Requirements

- NO ACOUSTIC TESTING AT SPACECRAFT LEVEL, SOLAR ARRAYS ONLY
- EMC TESTING VALUES TAILORED BY SR1-0105 FOR THE FOLLOWING REQUIREMENTS:
  - CE01/CEO3 (NARROWBAND AND BROADBAND)
  - RE02 (NARROWBAND AND BROADBAND)
  - CONDUCTED SUSCEPTIBILITY (POWERLINES)

  NO ANALYSIS OR TESTS ARE PLANNED FOR GEVS PARA. 2.5.4 MAGNETIC PROPERTIES EXCEPT ANALYSIS FOR STRAY MAGNETIC FIELD
- NO STRUCTURAL RELIABILTY TESTING BEING CONDUCTED ON COMPONENTS
- SINE SWEEP NOT BEING CONDUCTED ON SPACECRAFT

TRW

# Candidates For Qualification By Similarity

- THERMAL CONTROL
  - HEATERS
  - THERMOSTATS AND THERMISTORS
  - MLI
- ACDS
  - MAGNETOMETER
  - TORQUE RODS
  - FINE AND COARSE SUN SENSORS
- EPDS
  - BATTERY
- C&DH
  - GSTDN TRANSPONDER
- OAS
  - DTM SUBASSY (PARTIAL)
  - FILL & DRAIN VALVES
  - PRESSURE TRANSDUCER
  - FILTER
  - ISOLATION VALVES (PARTIAL)
  - TANK (PARTIAL)

# TOMS-EP
# EMI/EMC Verification

R. Bal

# EMC Topics of Discussion

- EMC Objectives
- Requirements vs Capability
- EMC Status/Assessment
- EMC Verification Activities
- Problem Areas/Concerns and Resolutions

# EMC Objectives

- To achieve internal EMC between Spacecraft
  - Components
  - Subsystems
  - Instrument
- To achieve external EMC between the Spacecraft and
  - EGSE (Electrical Ground Support Equipment)
  - LVI (Launch Vehicle Interfaces)
  - Launch Site
  - Orbital Environment

# EMC Requirements Vs. Capability

| Requirement | Capability | Comment/ Verification method |
|---|---|---|
| Primary Power Grounding/Isolation | | |
| Primary power shall be dc isolated from chassis/structure of individual components by ≧ 1 Megohm. | Comply<br>Except:<br>Transponder (chassis return)<br>MDE (30 KΩ)<br>PCU/ARE (100 KΩ) | System impact minimal. Refer to the following for details:<br>1) TOMS-EP.91.500.089<br>2) TOMS-EP.92.500.011<br>3) TOMS-EP.91.500.088<br>4) TOMS-EP.91.500.075 |
| Interface Requirements - Orbital Operations | | |
| Conducted Emissions, Primary Power Lines. Interference generated by units using primary power bus shall not exceed the levels given in Figures A-1 and A-2 of the SR1-0105 Document. | Comply | Units shall comply by similarity to existing design or test. Xponder tested, Instrument, CEA and GRA unit test planned. Remaining units tested in ETB. |
| Radiated Emissions. Interference emanating from the equipment case or cabling shall not exceed the levels given in Figures A-4 thru A-6 of the SR1-0105 | Comply | Units shall comply by similarity to existing design or test Xponder tested. Instrument and GRA test planned. Satellite Radiated Emissions test planned. |

# EMC Requirements Vs. Capability (Continued)

| Requirement | Capability | Comment/Verification method |
|---|---|---|
| Conducted Susceptibility, Primary and Secondary Power Leads. Equipment operational performance shall not be degraded when subjected to conducted susceptibility signals having amplitude shown in figures A-8 and A-9. | Comply | Units shall comply by test or similarity to existing design. Transponder tested. Instrument, CEA and GRA unit test planned. Remaining units tested in ETB. |
| Radiated Susceptibility. Equipment operational performance shall not be degraded when subjected to the Radiated E-Field of 2 V/m from 14 KHz to 2 GHz and 5 V/m from 2 GHz to 10 GHz. | Comply | Units comply by test or similarity to existing design. Transponder tested. Instrument test planned. Radiated Susceptibility test planned at the Satellite level. |
| In-rush Current<br>Transient in-rush current drawn by equipment turn-on or mode changes shall not exceed the values shown in Table 4-1 of SR1-0105. | Comply | Units comply by Test or similiarity to existing design. TAM In-rush Current is as yet TBD. |

in bay area

3 or 4 different positions

# EMC Status/Assessment

1) The following requirements were either tailored(from MIL-STD-461 C or GEVS) or modified in the EMC Spec. since PDR.

   a) Conducted Susceptibility Requirement (CS01/CS02).
   Tailored to TOMS-EP design based on the Bus Impedance Analysis. Revised susceptibility requirement to 2.0 Vp-p between 30 Hz and 100 KHz (Was 9.6 Vp-p), decreasing to 0.5 Vp-p (was 2.8 Vp-p) at 20 MHz. 0.5 Vp-p between 20 MHz and 500 MHz (was 2.8 Vp-p).

   b) Secondary Power Over-voltage requirement defined:
   +5V Output: Over-voltage up to 6.2 VDC for 20 µSec.
   ±15V Output: Over-voltage up to ±18.6 VDC for upto 20 µSec.
   Over voltage requirement based on DC-DC Converter shutoff capability.

# EMC Status/Assessment (Continued)

c) In-rush currents associated with equipment turn-on firmed-up Relays switching the in-rush currents meet the derating criteria set forth by MIL-STD-975 except in the VDE interface. The 10 Amp relays switches 16 A (pulse duration 6 μsec), whereas, MIL-STD -975 derating requirement is 6.1 Amps. Deviation submitted to GSFC. TAM in-rush as yet TBD.

d) Developed a "notch" for the Radiated Emissions (Narrowband and Broadband) - See Figure A-5 and A-6 in the EMC Spec. The notch was developed based on the Receiver sensitivity (-123 dBm).

# EMC Status/Assessment (Continued)

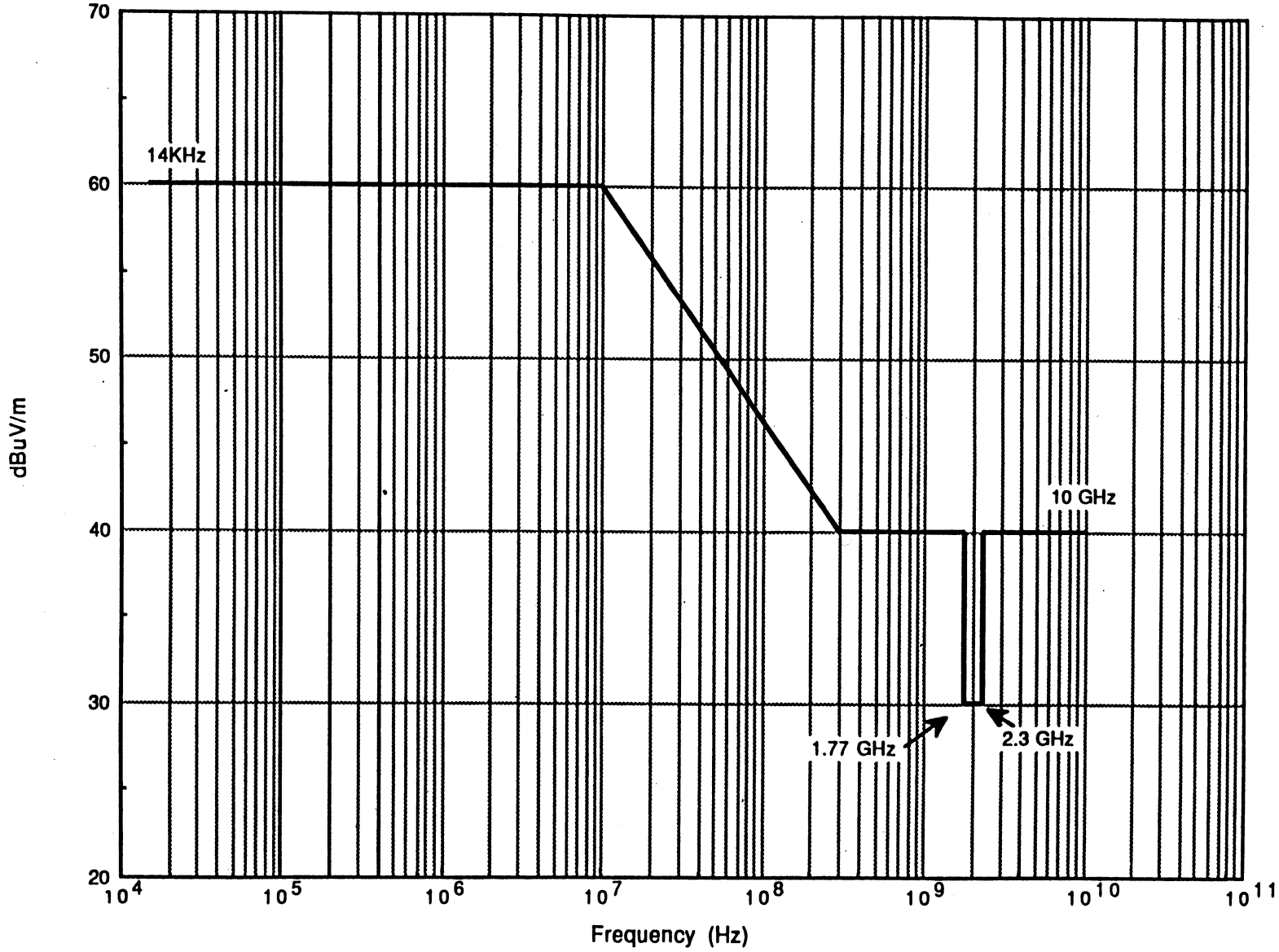


**Figure A-5 RE02 Narrowband Emissions, Electric Field.**

# EMC Status/Assessment (Continued)

TRW

2) EGSE EMI/EMC Design Requirements and Guidelines. Detailed Grounding, Bonding, Cabling, Filtering guidelines for EGSE. (See TOMS-EP.91.500.057 for details). Highlights are:

a) EGSE generated ripple shall be limited to 250 mVp-p and the transients above 28 VDC(overshoot) shall be limited to no more than 28 V peak (duration of less than 10 μsec).

56 V Total

b) DC power provided by EGSE to the Spacecraft shall be grounded at the Spacecraft only (1MΩ isolation between the DC power return and chassis and other returns at the EGSE).

c) Construct equipotential frameworks (Ground Reference Frames - Copper strips, 20 mils min. thickness and 9 inch wide), to which the spacecraft and the EGSE equipment shall be grounded).

# EMC Status/Assessment (Continued)

d) Power supplied by EGSE to Spacecraft shall be on twisted unshielded pair. Digital, data, commands, and state circuits shall be on shielded twisted pair etc.

3) Bus Impedance Characterization (TOMS-EP.92.500.024). The bus impedance varies from a minimum of 55 mΩ to a maximum of 330 mΩ between 0.1 Hz and 100 KHz. Bus Impedance results were utilized in conjunction with the Conducted Emissions requirements to tailor the Conducted Susceptibility requirement.

A maximum of 330 mΩ (Bus Z at 10 KHz) and a maximum of 2.2 Amps p-p (Conducted Emissions-RSS of 10 loads at 10 KHz) results in a noise level of 0.74 Vp-p. The Conducted Susceptibility level was set at 2 Vp-p which provides a design margin of 8dB).

# TOMS-EP Bus Impedance

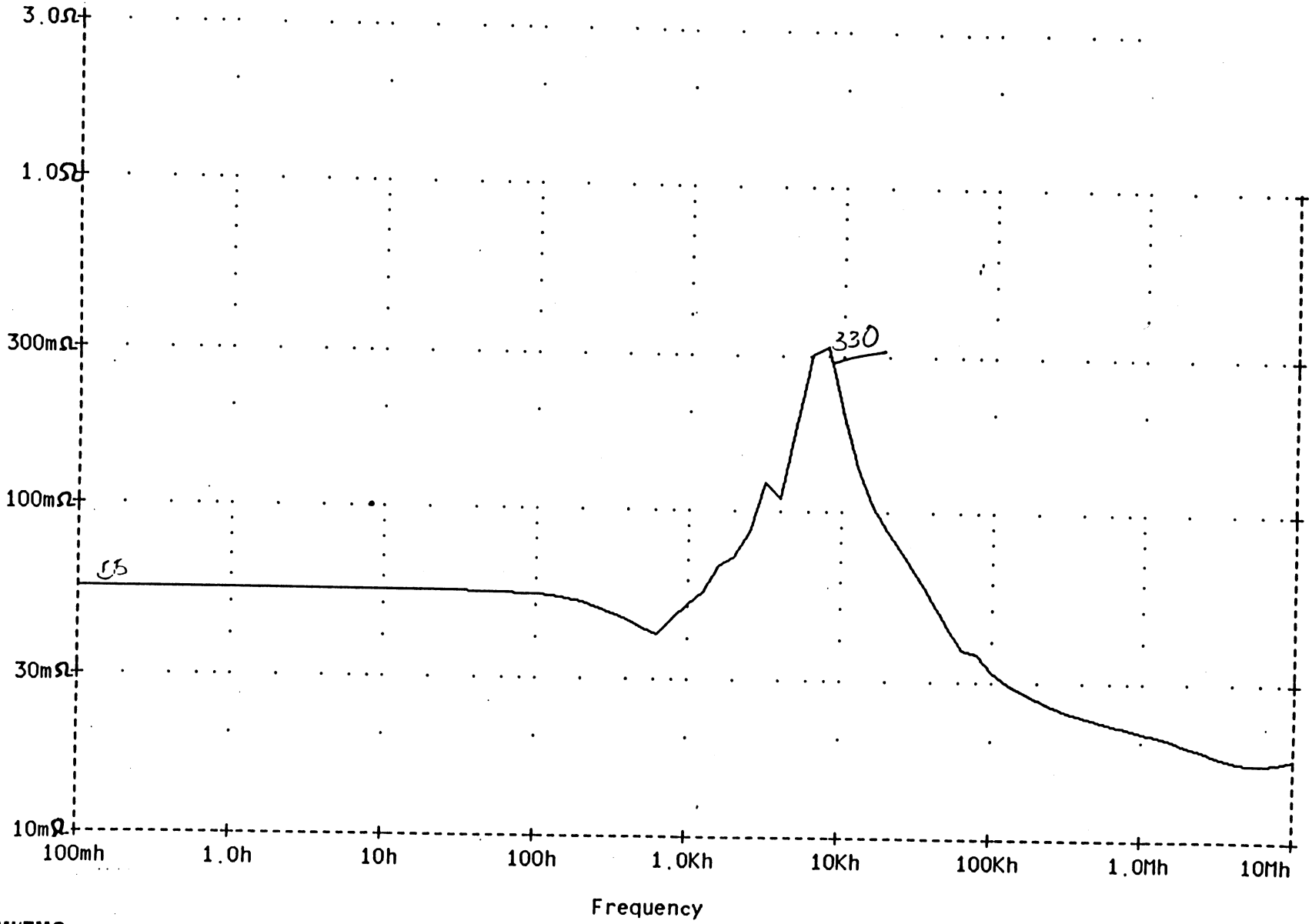

# EMC Verification Activities

## 1) SEMCAP ANALYSIS

Completed SEMCAP (Specification Electro-Magnetic Compatibility Analysis Program). SEMCAP is a Air Force/NASA approved code. The objective is to analytically verify EMISMs (Electromagnetic Interference Safety Margins) between signal interfaces, that is , ensure that the present design (cable type, twisting shielding and layout) provides ample margin from cable-to-cable coupled noise.

SEMCAP uses electromagnetic field equations and capacitive/inductive coupling equations to calculate the cross-coupling between an energy source (Generator) and a potentially susceptible interface (Receptor).

# EMC Verification Activities (Continued)

Modeled 10 Receptors and 4 Generators to represent majority of the satellite interface types. Receptors and Generator are as follows:

**Receptors**

1. GRA Current Telemetry
2. DSE Relay Status Tlm
3. EPDS WDT- Pulse Output
4. ADE Readout Enable
5. Special Command I/F
6. MDE Analog Cmd
7. MDE Motor Current Tlm
8. Serial Tlm (Data)
9. IRSA-SCE Infrared I/F
10. IRSA-SCE Infrared I/F

**Generators**

1. Serial Telemetry Clock (Steady state noise generator)
2. OAS Heater turn-on (Transient noise generator)
3. Serial Telemetry Data (Steady state noise generator)
4. Motor Drive Current (Steady state noise generator)

# EMC Verification Activities (Continued)

Table below shows the margin in dB for the modeled interfaces for both the steady state and Transient cases.

| Receptors | Steady-State Margin (dB) (RSS) | Transient Margin (dB) |
|---|---|---|
| 1. GRA Current Telemetry | 13 | -36 |
| 2. DSE Relay Status Tlm | 65 | 18 |
| 3. EPDS WDT- Pulse Output | 60 | 16 |
| 4. ADE Readout Enable | 70 | 26 |
| 5. Special Command I/F | 57 | 14 |
| 6. MDE Analog Cmd | 56 | 14 |
| 7. MDE Motor Current Tlm | 17 | -33 |
| 8. Serial Tlm (Data) | 90 | 55 |
| 9. IRSA-SCE I/F- Infrared sig | 21 | 07 |
| 10. IRSA-SCE I/F-BDC sig | 20 | 20 |

# EMC Verification Activities (Continued)

## Results

**Steady State Operations:** Analysis shows that ample positive margin exists on all receptors for the steady state operations. For example, a 13 dB margin (RSS) exists on the GRA Current telemetry. This means the following:

Threshold of sensitivity for GRA Current Telemetry was established as 20 mV(minimum resolution step size for a 8-bit telemetry word). The noise from all steady-state generators adds upto 4.6 mV (RSS), thus providing a 13 dB margin.

**Transient Effects:** For transient event (heater turn-on) a negative margin exists on the GRA current telemetry (-36 dB) and the MDE Motor Current Telemetry (-33 dB). Such one time erroneous telemetry values would be ignored, that is, time averaging of these parameters is required.

# EMC Verification Activities (Continued)

TRW

2) Magnetic Analysis.

a) The DC Magnetic field at the Instrument is 0.64 Gauss (requirement is 1 Gauss). DC Magnetic field levels at the Instrument from all spacecraft contributors listed below add up to 238 mGauss (RSS). Earth field at the TOMS-EP orbit is 400 mGauss.

1. Solar Arrays (18.3 mGauss - By Analysis)
2. Mag. Torq. (236 mGauss - By Analysis) - ON at full Current
3. Transponder (5.1 mGauss - By Analysis)
4. GRA (4 mGauss - Test Data)
5. Reaction Wheels (3 mGauss - Test Data)
6. PCU (6.9 mGauss - By Analysis)
7. Secondary Power structure currents (15.8 mGauss - By Analysis)
8. RF Switch (17.1 mGauss - Test Data)
9. Misc. leakage currents (<1 mGauss - By Analysis)

# EMC Verification Activities (Continued)

b) DC Magnetic field requirement is 53 mGauss at the TAM for an earth field measurement error of 10%. DC Magnetic levels at the Triple Axis Magnetometer add upto 31.4 mGauss (RSS) from all spacecraft contributors listed below:

1. Solar Arrays (18.3 mGauss - By Analysis)
2. Mag. Torquers (2.4 mGauss - By Analysis)-Residual Field
3. Transponder (5.1 mGauss - By Analysis)
4. GRA (4 mGauss - Test Data)
5. Reaction Wheels (3 mGauss - Test Data)
6. PCU (6.9 mGauss - By Analysis)
7. Sec. Pwr structure currents (15.8 mGauss-By Analysis)
8. RF Switch (17.1 mGauss - Test Data)
9. Misc. leakage currents (<1 mGauss - By Analysis)

TAM measurement of earth's magnetic field will be software controlled to be sampled only when no current is being dumped in the torque rods.

# EMC Verification Activities (Continued)

c) Calculated the Spacecraft magnetic moment to be 0.29 $Am^2$ (RSS) from all spacecraft contributors listed below:

1. Solar Arrays (0.081 $Am^2$)
2. Magnetic Torquers (0.1 $Am^2$)-Residual moment with Torquers off
3. Transponder (0.07 $Am^2$)- Transmitter-OFF
4. PCU (0.25 $Am^2$)
5. Secondary Power structure currents (0.05 $Am^2$)

With Transmitter-On the Transponder contribution is 0.33 $Am^2$ and the magnetic moment is 0.44 $Am^2$(RSS).

# EMC Verification Activities (Continued)

TRW

3) System Level Tests

Perform System Level EMI/EMC Tests. Testing will be shared between the ETB and the Satellite. Testing on ETB has the following advantages:

1) Recognition and resolution of problems prior to spacecraft A&T.
2) Reduce TOMS-EP EMI/EMC Test time.

The ETB and Spacecraft EMC testing will be as follows:

- Perform the following tests on the ETB:
- Ripple Measurement on Primary Power Bus
- Equipment Turn-on and Turn-off Transients
- Conducted Susceptibility-Steady State (injection level is 6 dB higher than the ripple measured on the primary power bus above).

# EMC Verification Activities (Continued)

- Conducted Susceptibility- Transient (injection level is 6 dB higher than the transients measured in the turn-on turn-off transients measured above.

- Perform the following tests on the Satellite:
- Radiated Emissions
- Radiated Susceptibility

# Problem Areas/Concerns and Resolution

EMI/EMC Tests are performed on selected units only. EMC problems may be discovered during A&T, affecting schedule/cost.

Resolution:

An integrated Spacecraft level test (Conducted Emissions/Susceptibility) is planned in ETB configuration to discover and resolve EMC problems prior to spacecraft integration. Radiated Emission/Susceptibility problems could still surface at the system level.

# TOMS-EP
# Spacecraft Integration, Test, Launch, and Mission Operations

# TOMS-EP
# Spacecraft Integration, Test, and Launch Site Activities

J. Durschinger

# *TOMS-EP*

TRW

## ETB-TOMS-EP Integration and Test Schedule

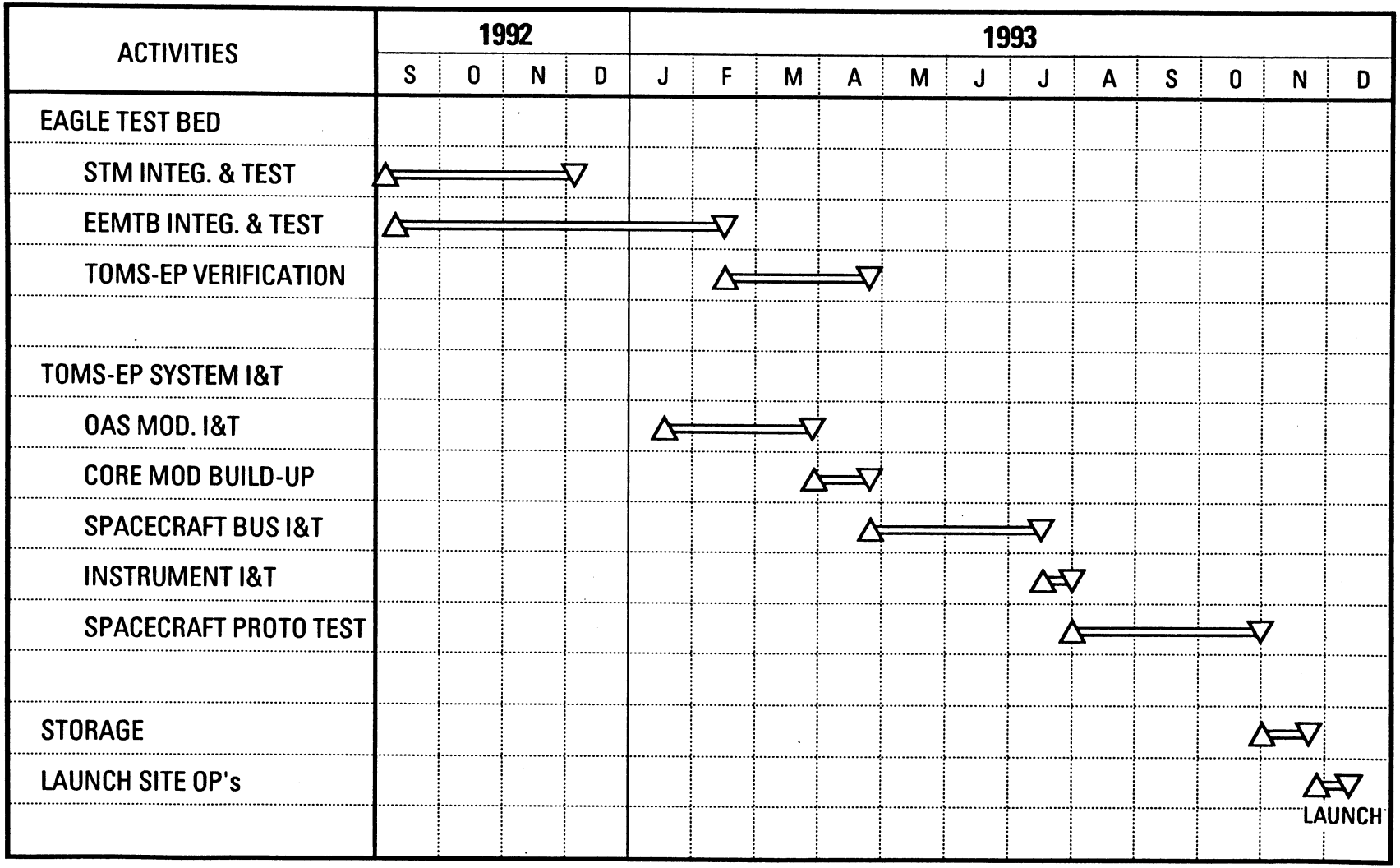


M2M 92.149.15

## Integration and Test Key Features

- Test equipment, key procedures, critical test software verified on ETB
- TOMS-EP engineering models verified on ETB
- Key system analysis and software verified on ETB
- TOMS-EP functional testing is structured as the second in a series
- TOMS-EP is a protoflight environmental test I&T program
- S/C bus baseline performance verified before instrument integration
- OAS S/S test performed at module level
- Factory testing assures full spacecraft/instrument functionality requiring only aliveness test at launch site

TRW

## System Test Requirements Sources

Need these docs. for PE

- System assembly test and launch is performed in accordance with D19251 Integration, Verification & Test Plan, CDRL-IT-01
  - This is my bible

- IV&T plan derived from requirements in:
  - SY1-0013 System Performance Verification Specification
  - PA1P
  - Launch Vehicle ICD (IF3-0008)
  - Instrument ICD (IF3-8007)
  - Instrument Integration and Operations Plan (D19081)
  - Contamination Control Plan (D19082)
  - EMI/EMC Requirements Specification and Control Plan (SR1-0105)
  - Ground System Test Plan (D19818)

# TOMS-EP

TRW

## Test Program Structure is Derived from Verification Test Matrix

all tests done w/ Instr.

| Requirement (SY1-0013) | Capability (D19251) |
|---|---|
| • Functional | Comprehensive performance test (CPT)<br>• Baseline (7.3)<br>• Hot and cold T/V (7.17)<br>• Contents defined by requirements in SY1-0013 |
| • One hundred hour failure free performance | Accumulated during spacecraft T/V-T/B testing |
| • EMC/EMI | EMC test (7.6)<br>• Conducted test on ETB<br>• Radiated test on TOMS-EP |
| • Vibration | Prototype 3 axis random vibration test (7.10) |
| • Pyroshock | Prototype separation and array release shock tests (7.11, 7.12)<br>• 2 actuations |

TRW

## Test Program Structure is Derived from Verification Test Matrix (Continued)

| Requirement (SY1-0013) | Capability (D19251) |
|---|---|
| • Sine burst | Sine burst test (7.9) |
| • Thermal vacuum | Thermal vacuum temperature cycling (6 cycles) (7.17) Instr. to go thru this |
| • Thermal balance | Thermal vacuum/thermal balance test (7.17)<br>• Hot and cold thermal balance<br>• Hot and cold CPT |
| • Leak | OAS leak test (7.1.3, 7.18) |

- include a test (like a compatibility test) w/ all systems on (Instr./S/C)

TRW

## Software Verification During System Test

- Software verification is performed on the ETB
  - C & DH subsystem in phase B verification tests
  - ACDS subsystem in TOMs LFBT
  - EPDS subsystem in TOMs EPDS verification tests
- Flight software is loaded into SP & DP EEPROMS using a Gulton designed loader which tests the PROMS before loading the software
- Memory dumps during the spacecraft CPTs will verify the software has not been corrupted by hardware failures during environmental testing
- Any software used in normal command and telemetry processing and for hardware interfaces will get exercised as part of the planned hardware tests in the CPT
- Critical RTCSs (ie deploy) are verified in system I & T

## Integration and Test Plan

- Component
- Spacecraft Bus Assembly and Test
- Instrument Installation and Integration
- Protoflight Spacecraft Assembly and Test

## Component Qualification and Acceptance

- Specific test requirements and qualification status for each component are contained in SY1-0013, verification test matrix
- Requirements are flowed down to individual suppliers
- Test environments for each component specified in EV2-0030
- Component functional and performance verification test requirements are specified in Section 4, Verification Requirements of the individual EQ specifications

# TOMS-EP

TRW

## Integration & Test Overall Flow

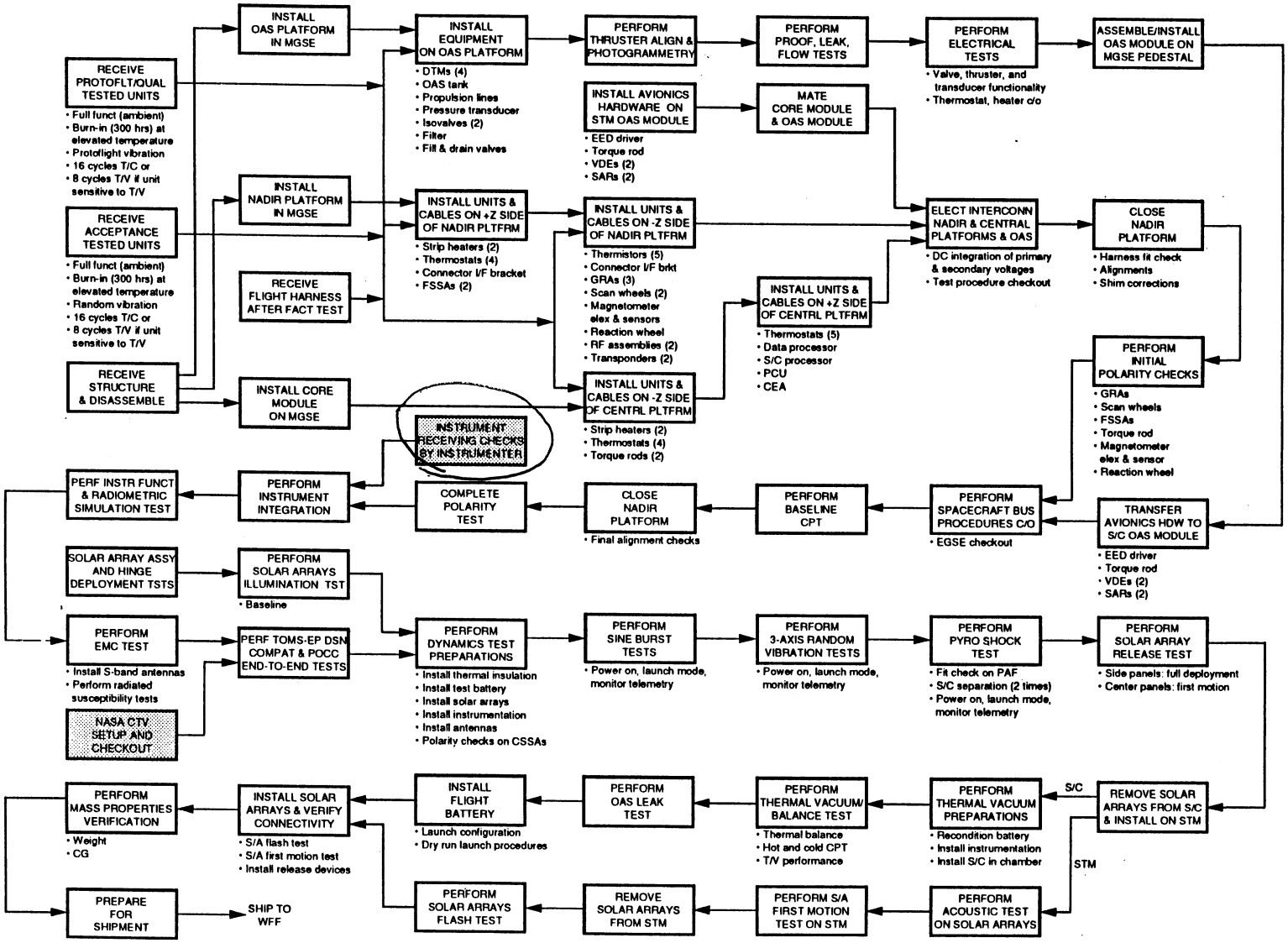

TRW

# OAS Subsystem Assembly and Test

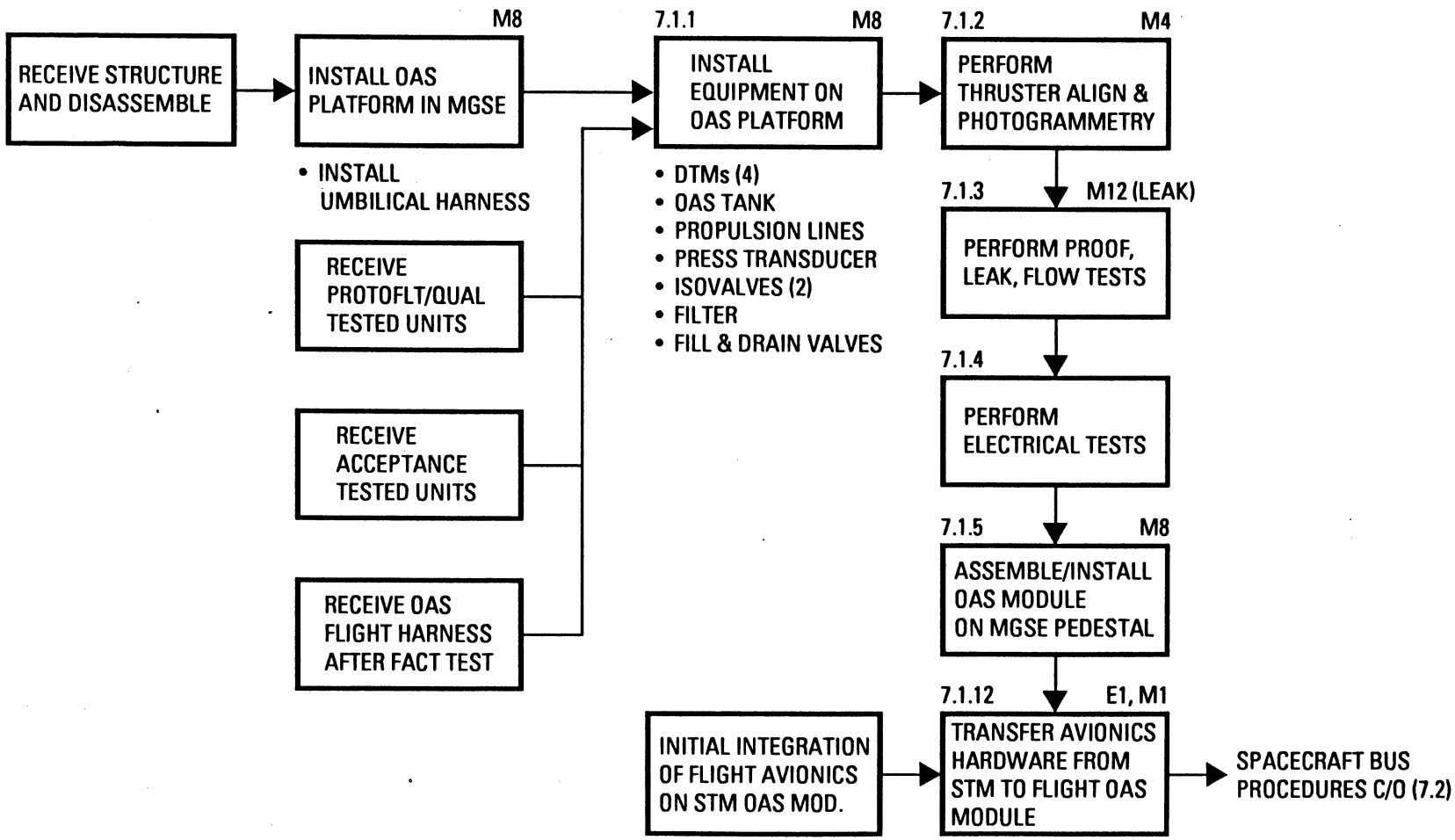

TRW

# Spacecraft Bus Assembly Without OAS

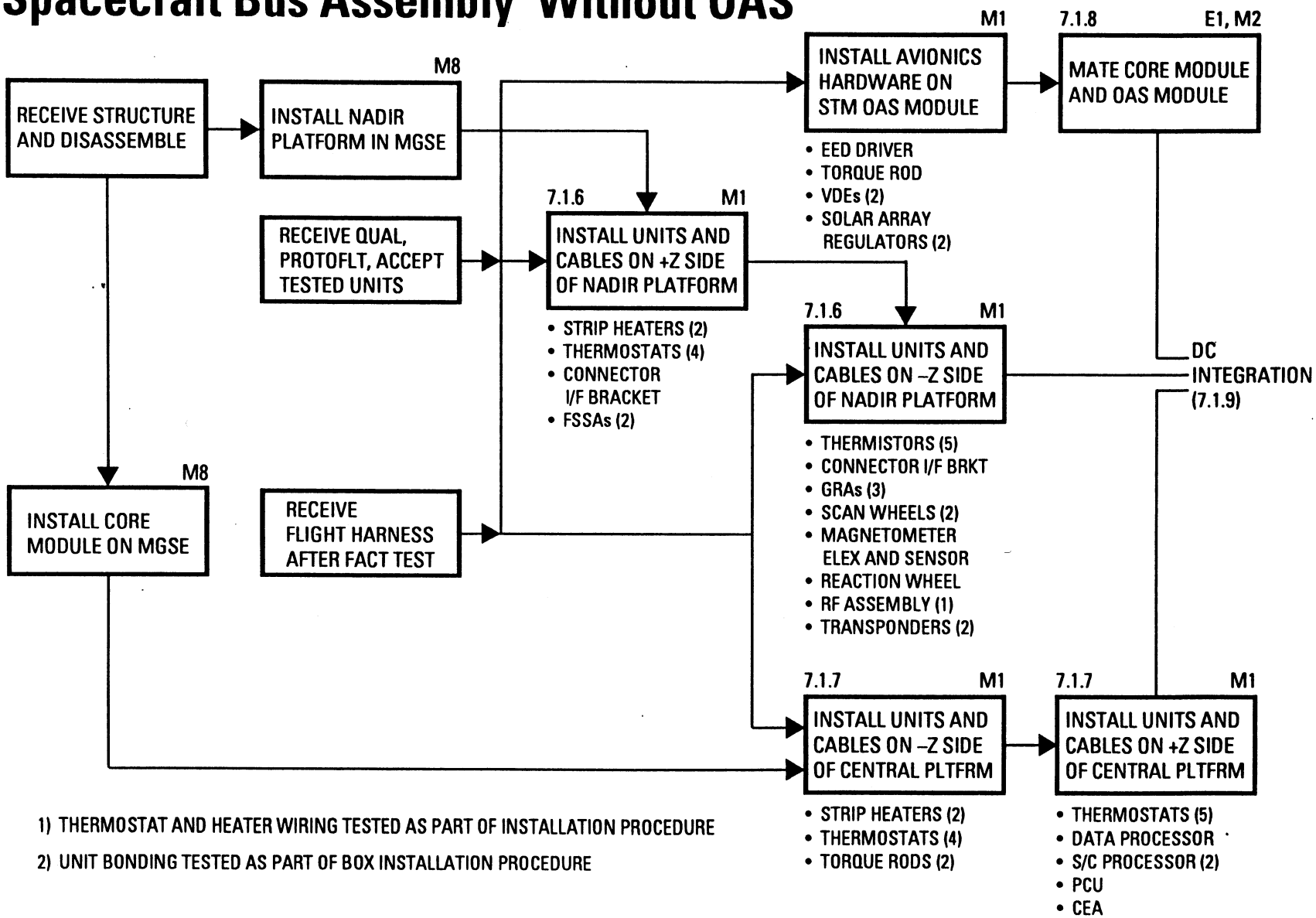


1) THERMOSTAT AND HEATER WIRING TESTED AS PART OF INSTALLATION PROCEDURE

2) UNIT BONDING TESTED AS PART OF BOX INSTALLATION PROCEDURE

TRW

# Spacecraft Bus Integration and Test

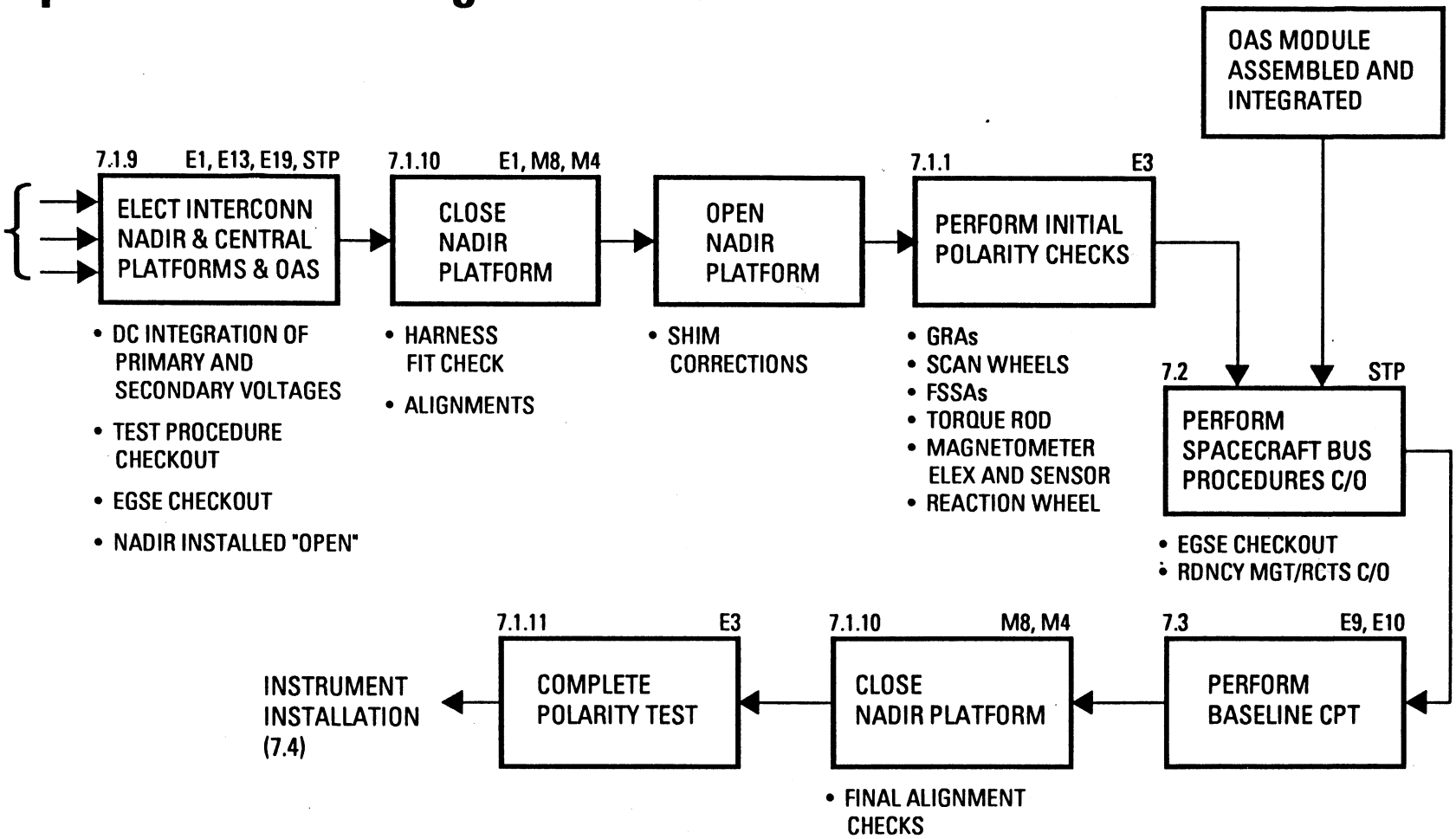

TRW

## Comprehensive Performance Test (CPT) Contents

- Performed to demonstrate satisfactory operation of spacecraft hardware
- Performed as close as practical to flight configuration
  - No solar arrays
  - Hardline power connection
  - Sensor stimulation (light sources, earth rotation, earth magnetic field)
- Tests performed in prime, redundant, and cross strapped configurations
- Communication transponder
  - Receiver thresholds
  - U/L and D/L modulation indexs
  - RF output power and spurs
  - D/L frequency stability
- C&DH digital
  - Command reception, execution and verification
  - On board memory loads
  - Telemetry data rates, modulation and format reprogramming
  - Data record and playback
  - Post separation stored command sequences

## CPT Contents (Continued)

- EPDS
  - SAR functional
  - Converter outputs
  - PCU load switching
  - Solar array release driver functions
- ACDS
  - Earth sensor, sun sensor and Gyro (earth rate) stimulation
  - Magnetometer stimulation (earth magnetic field) and torque rod response
  - Reaction wheel, scan wheels, and gyro run up/down
  - Thruster pulsing
- Special tests
  - Launch sequence
  - Instrument SOH and performance (instrument contracts) tests
  - Operation of spacecraft at high and low bus voltage
  - Hardware driven redundancy switchovers

# TOMS-EP

TRW

## TOMS Instrument to Bus Installation and Integration

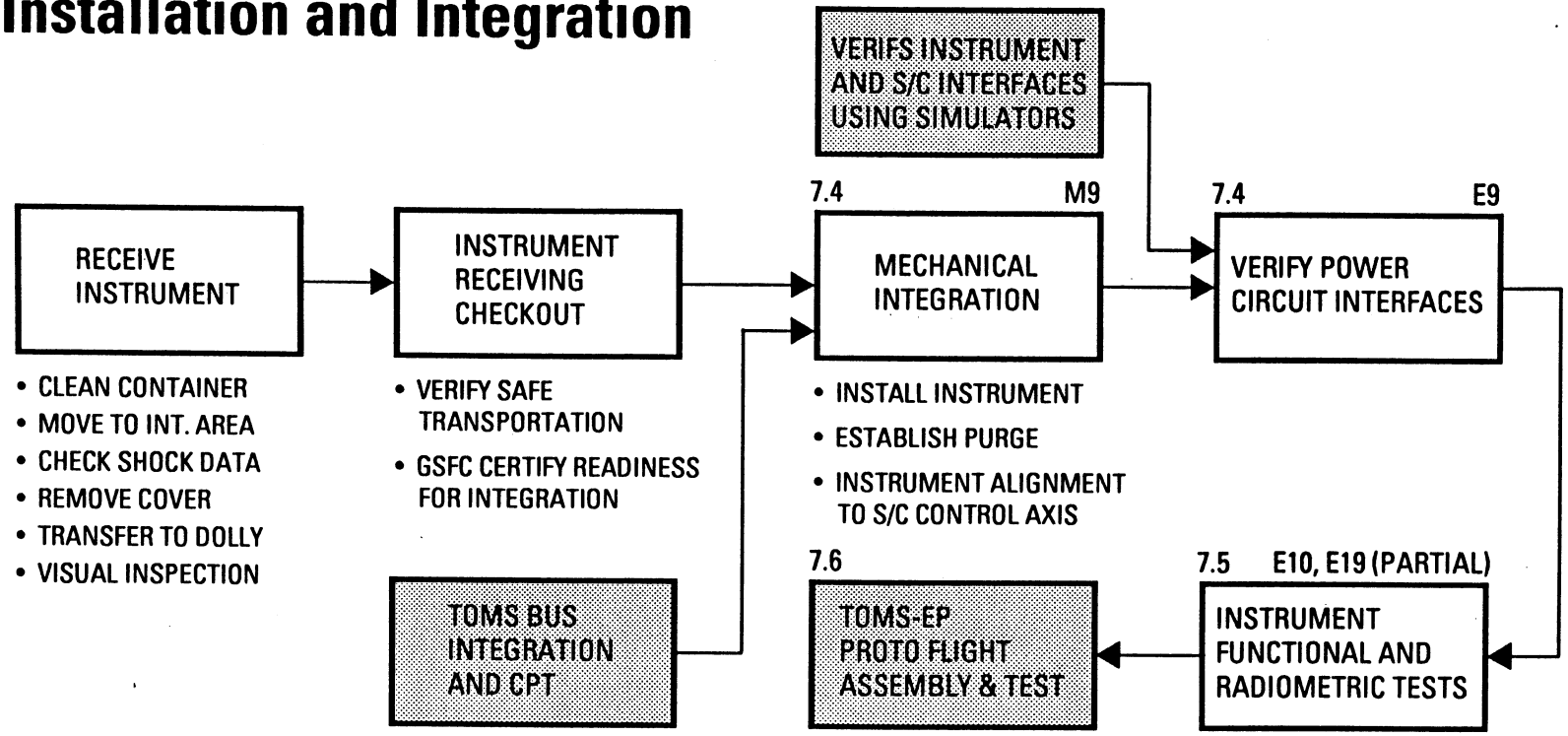


- CLEAN CONTAINER
- MOVE TO INT. AREA
- CHECK SHOCK DATA
- REMOVE COVER
- TRANSFER TO DOLLY
- VISUAL INSPECTION

- VERIFY SAFE TRANSPORTATION
- GSFC CERTIFY READINESS FOR INTEGRATION

- INSTALL INSTRUMENT
- ESTABLISH PURGE
- INSTRUMENT ALIGNMENT TO S/C CONTROL AXIS

- FUNCTIONAL TEST
- INTEGRATED BUS/ INSTRUMENT FUNCTIONS
- SCIENCE MODE
- INSTRUMENT CONTINGENCY MODES
- BASELINE STIMULUS DATA

PERFORMED OFFLINE

## Instrument Integration Highlights

- Post shipment inspection and preparations for installation are performed in class 100 bench as required
- Instrument and spacecraft interfaces previously checked using appropriate spacecraft and instrument simulators
- The instrument is mechanically mated and power interface checks made through breakout boxes (BOB)
- After initial I/F check, flight connections are made
- Instrument alignment reference is measured relative to the gyros alignment reference within 0.01 degree
- Functional and radiometric tests are performed using the IGSE, instrument stimulus light source, and spacecraft GTS
- The TOMS-EP spacecraft is now completely integrated and ready to start environmental testing

# TOMS-EP

## Protoflight Test

Need to Add testing between Vib & T/V, T/B

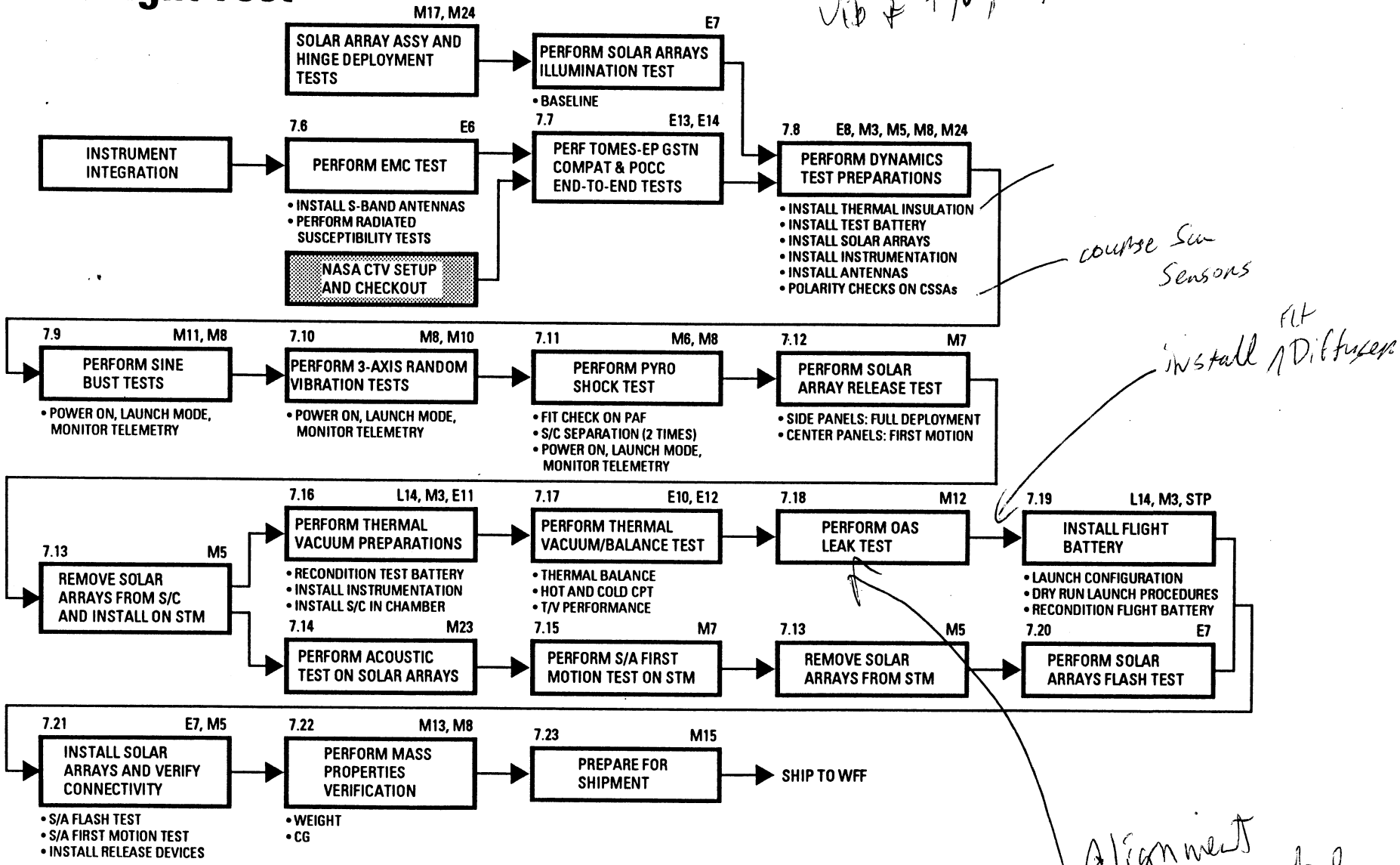


Alignment double check done Here

TRW

## TOMS-EP Protoflight Test Highlights

- Initial GSTN compatibility and POCC end-to-end test provides early check of ground operations interface and POCC software
  - Final checks performed at launch site to verify POCC fixes
- Dynamic Tests
  - Spacecraft power-on, launch configuration (electrical and mechanical) with EGSE T–0 umbilical connected
  - Interleave random vibration and sine burst on each axis to minimize test set-ups
  - Flight PAF fit check perfomed during T/V test preparations
  - Test PAF used for shock test
  - Solar array acoustic test performed offline on STM structure after spacecraft shock test

## TOMS-EP Protoflight Test Highlights (Continued)

- Thermal vacuum/balance test summary
  - Test consists of six thermal cycles (one for thermal balance)
  - Solar arrays will be removed before T/V
  - Test heaters are installed on the spacecraft side panels to simulate orbital heat inputs
  - Test heaters are adjusted to drive as many boxes as practical to their minimum and maximum protoflight temperature limits on each cycle
  - Data from the thermal balance test is used to validate the analytical thermal model
  - Spacecraft and instrument comprehensive performance tests will be performed at hot and at cold conditions
  - Spacecraft and instrument powered on in a baseline configuration with monitoring of SOH telemetry during all cycles

TRW

## Spacecraft Alignments

- The nadir platform mounted alignment cube is the reference for component alignments
- All critical alignment components are attached to the same platform providing a stable base and eliminating the need for post dynamic test flight alignment measurements
- Shimming required to meet installation tolerances for the following components:
  - Gyro reference assemblies (3)
  - Scanning wheels (2)
  - Fine sun sensors (2)
  - Instrument
  - Reaction wheel assembly
- STM Confirms the overall spacecraft structural stability after dynamic environment exposure and validates the "one-G" nadir platform "droop" error analysis

## Launch Site Operations

- Launch Site Flow
- Launch Site Requirements
- Open Issues

TRW

# TOMS-EP Payload Processing Area Activities

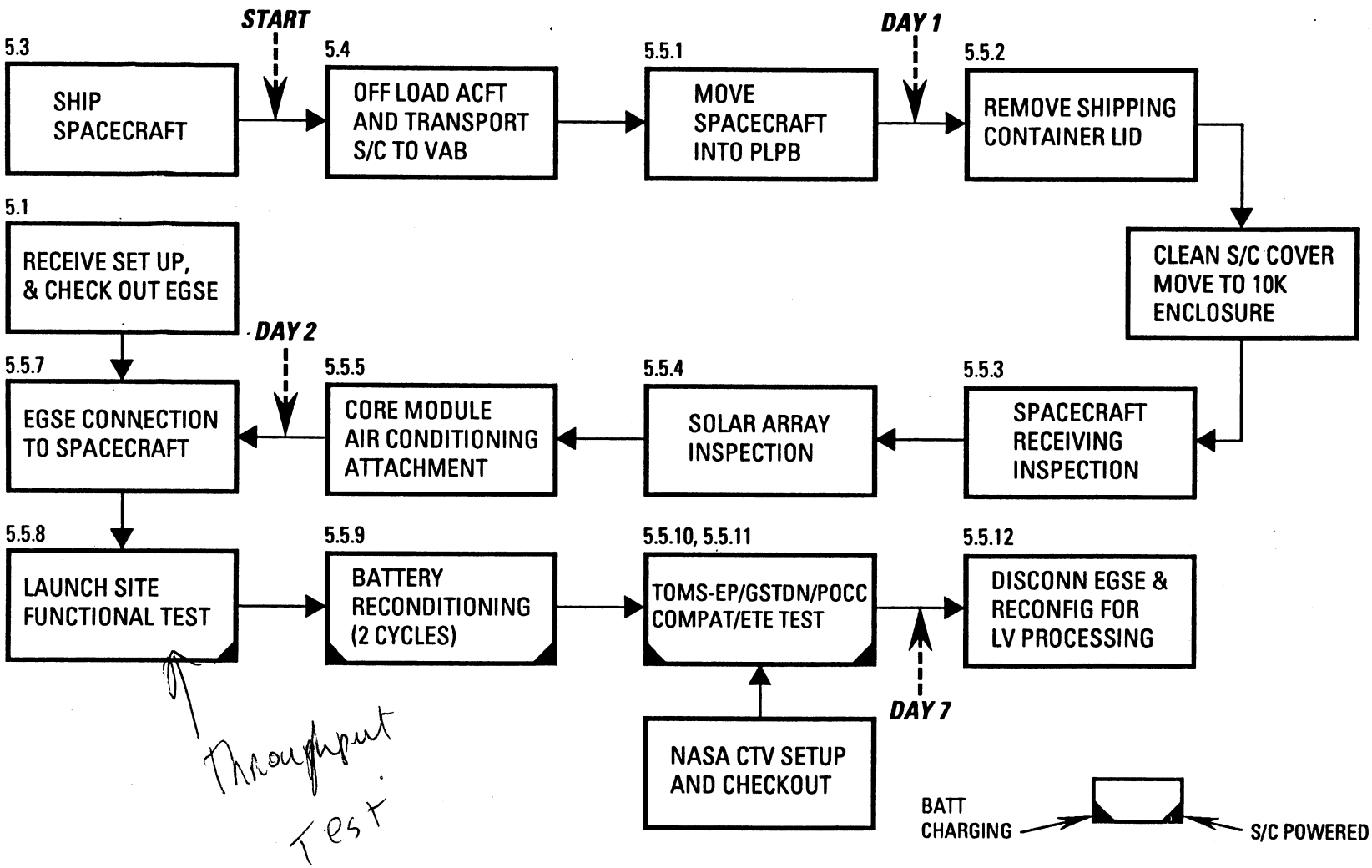


Throughput Test

TRW

# TOMS-EP Fueling and Launch Vehicle Mating Activities

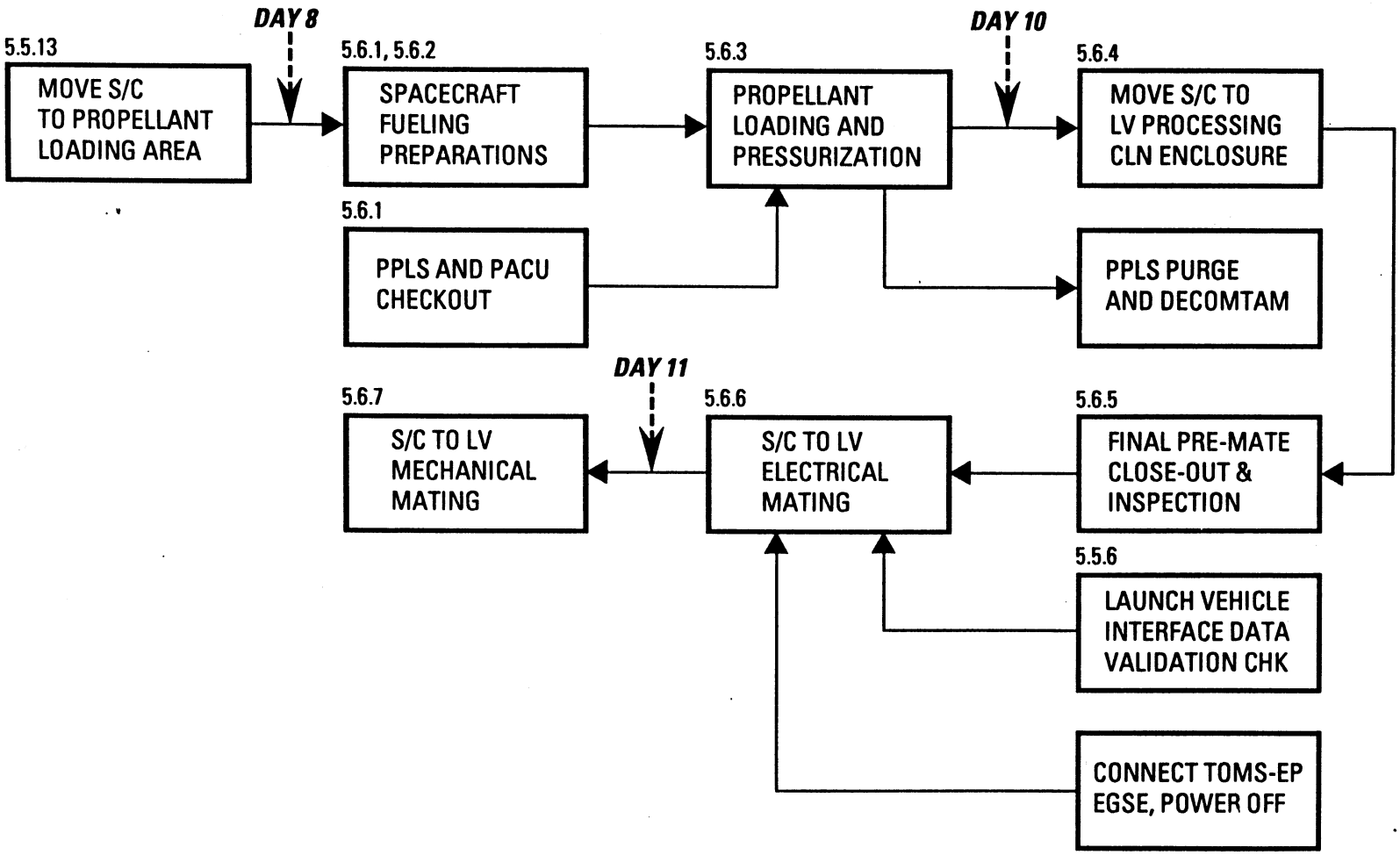

# TOMS-EP

TRW

## Post Mate to Launch Activities

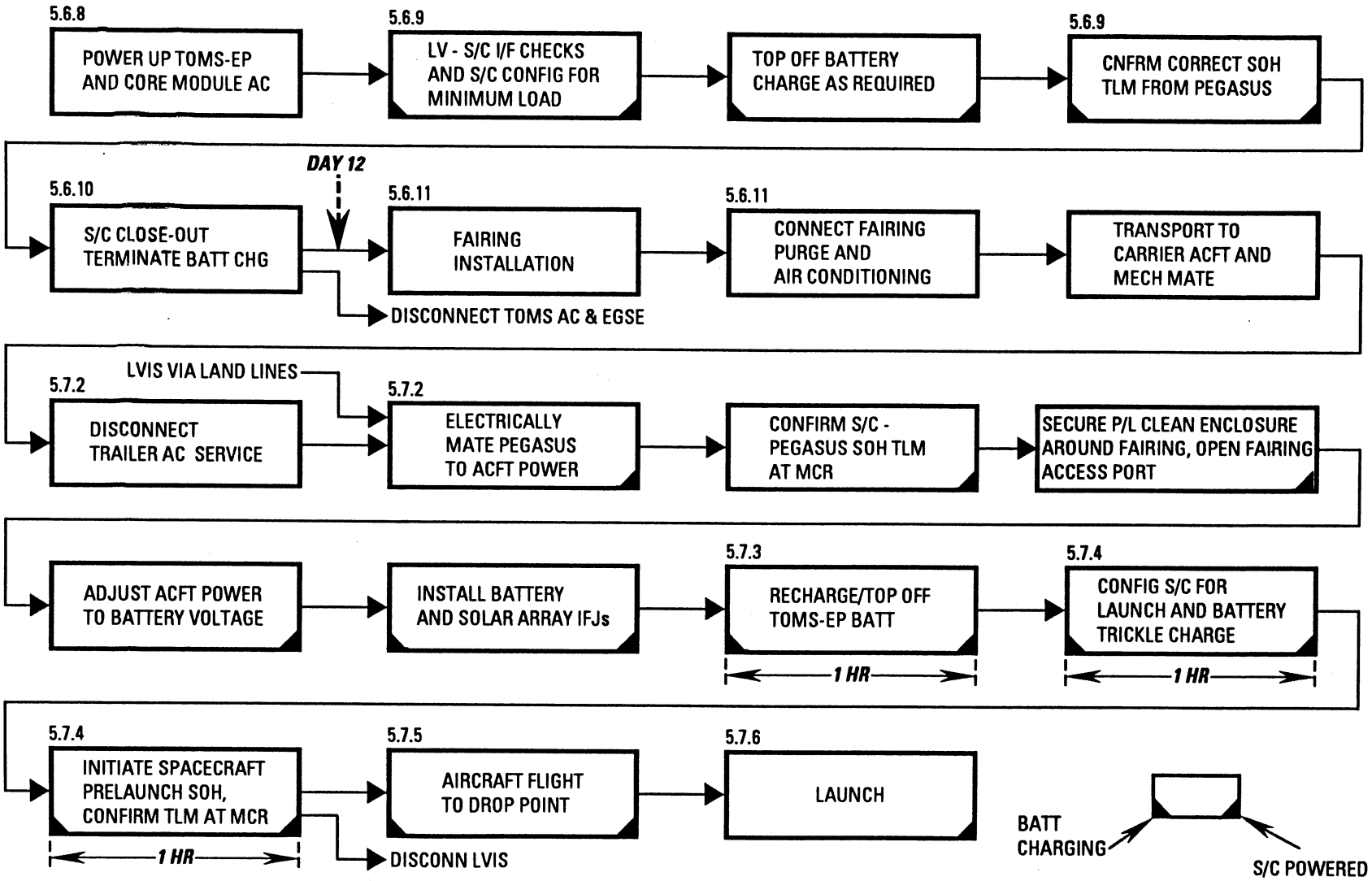

TRW

## TOMS-EP LV Spacecraft Power Requirements

| Activity | Function | GSE and Access |
|---|---|---|
| Post mate S/C I/F checks | Supply primary S/C bus power for interface tests, battery trickle charging | TOMS-EP PCMTS in VAB at pass thru I/F connector P2 in L/V |
| Transport to flight line and mate to carrier aircraft | None, TOMS battery charged, open circuit | none |
| Battery top off charge and configure S/C for launch | Supply primary S/C bus power for launch loads and battery charge | Adjustable regulated GFE power supply in L1011 with access at the LPO panel |
| Takeoff & captive flight | Same as above | Same as above |
| Powered flight | None | None |

## TOMS-EP LV Telemetry Verification Monitor Requirements

| Activity | Function | Equipment Required |
|---|---|---|
| Post mate S/C I/F checks | Monitor L/V I/F S/C SOH telemetry | Pegasus S3 Mux, TLM EGSE, and P/L display console in MCR |
| Flight line mate to aircraft power thru final launch configuration | Monitor L/V I/F S/C SOH telemetry | Same as above |
| Takeoff and captive flight | Same as above | Same as above |
| Powered flight | Same as above | Same as above |

- SOH functions are all functions on the P1 L/V I/F connector being routed to the Pegasus S3 Mux

TRW

## TOMS-EP LV PCU Command and Status Verification Requirements

| Activity | Function | GSE | Access |
|---|---|---|---|
| Post mate S/C configuration checks | Command PCU, check relay status | TOMS-EGSE and LVIS in VAB | Pass thru I/F connector P2 & P3 on L/V |
| Transport to flight line and mate to carrier aircraft | None | None | None |
| Configure S/C for launch | Command PCU, check relay status | TOMS-EGSE in VAB, LVIS in carrier aircraft | Pass thru connector on L/V thru PCA LPO panel |
| Takeoff and captive flight | None | None | None |
| Powered flight | None | None | None |

- LVIS used in carrier aircraft only for preflight operations and removed prior to takeoff

TRW

# TOMS-EP Ground Support Equipment

- MGSE
- EGSE

## Mechanical Ground Support Equipment

- Spacecraft and solar array dollies
- Spacecraft rotation, rate and vibration fixtures (3)
- Alignment adapter
- Nadir platform pivot strongback
- Spacecraft covers
- Solar Array Protective Covers (6)
- Shipping container
- Shipping container air conditioner
- Core module air conditioner
- Vertical and Horizontal sling
- Propellant and pressurant loading system

# TOMS-EP
# EGSE Subsystem (Ground Test System)
# Major Components

- System Test Controller (STC)

- Automated Test Sets
  - Power and Control/Monitor Test Set (PCMTS)
  - Telemetry and Command Test Set (TCTS)
  - Radio Frequency Test Set (RFTS)

- Ancillary Equipment (supplied with above test sets)
  - Diode Isolation Unit (DIU)
  - In-Flight-Jumper (IFJ) Simulator
  - Deployment Device Load Simulator (DDLS)
  - Remote Interface Unit (RIU)

- Test Battery (Battery Simulator Console)

- Manual Test Sets
  - Spacecraft Interface Simulator (SIS)
  - Instrument Interface Simulator (IIS)

- Instrument Ground Support Equipment (IGSE) [GFE]

# TOMS-EP
# Integrated Test Configuration

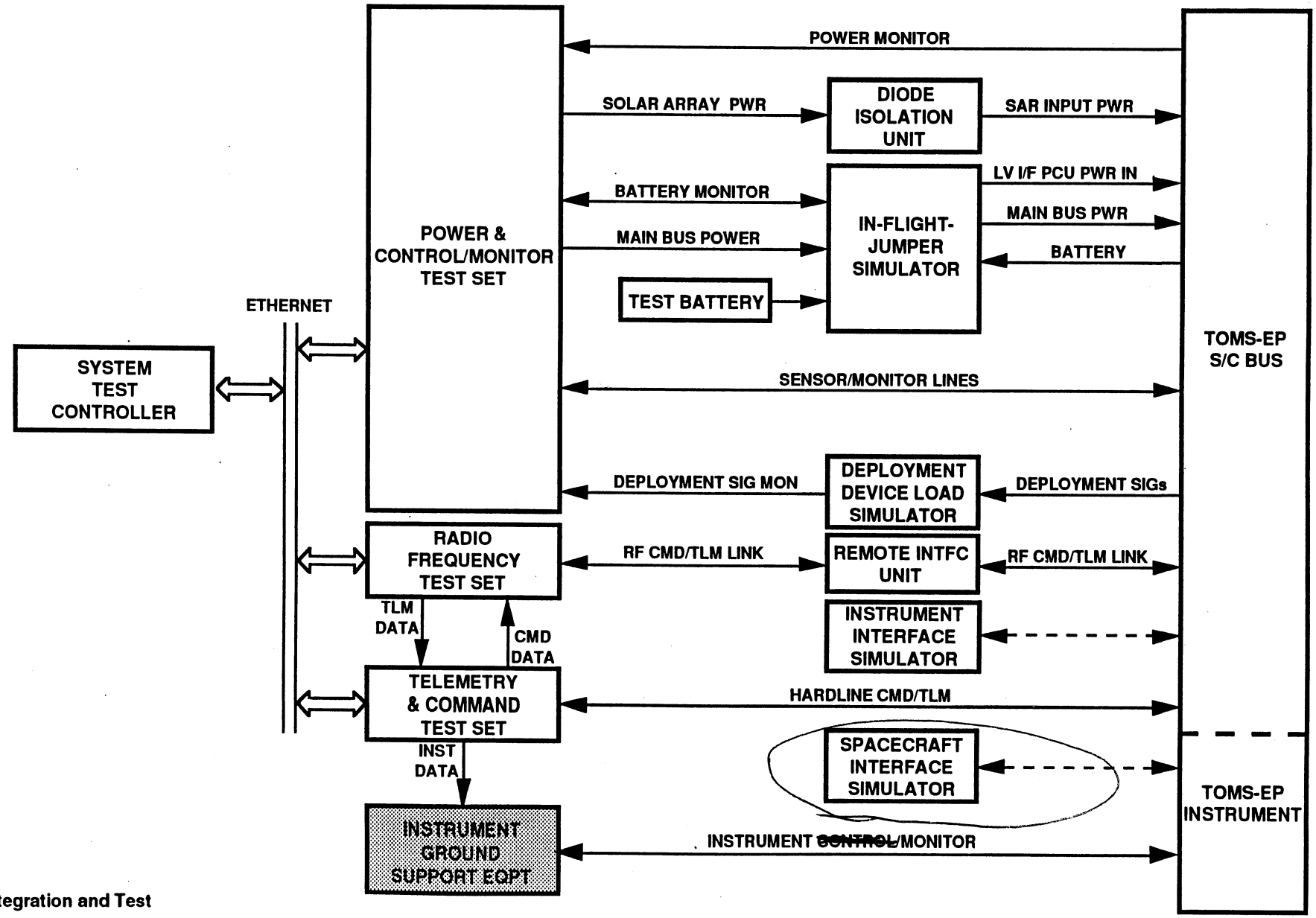

# TOMS-EP
# System Test Controller
# Functional Capabilities

- Execute automated test sequences (ATSs)
- Keyword library
- Spacecraft commanding (via the TCTS)
  - Command effects
  - Command constraints
- Telemetry processing
  - Limit checking
  - Alarm processing of telemetry parameters
- Windows MMI for test execution
  - Alarm monitoring
  - Page/plot
  - Displays
  - Scrolling history
- Test history data archiving and analysis tools
- Spacecraft memory load and dump
- Data base driven system

# TOMS-EP
# Power & Control/Monitor Test Set
# Functional Capabilities

- Supply external power
  - Diode isolated to SARs
  - Main bus via LV I/F or battery IFJ
- Charge/recondition battery
- Monitor bus voltage & battery volt/current/temp
- Simulate spacecraft IFJs
- Simulate deployment device loads
- Monitor deployment signals to specified thresholds
- Monitor thruster valve drive signals to specified thresholds
- Simulate earth sensor & sun sensor (fine and coarse) signals
- Generate UV/OV detector trigger signal to PCU
- Provide launch vehicle interface functions
- Built-in self-test

# TOMS-EP
# Telemetry & Command Test Set
# Functional Capabilities

- Commanding
  - STDN compatible, hardline or via RFTS
  - Accept command data from STC
  - Command echo checking
- Telemetry
  - STDN compatible, hardline or via RFTS
  - Process clear text telemetry for transmission to STC
  - Telemetry sync status to STC
  - Extract instrument data & output to IGSE
- Convolutional encoding/decoding
- Spacecraft processor hardline enable & standby mode control interfaces
- Archiving & self-test capability

# TOMS-EP
# Radio Frequency Test Set
# Functional Capabilities

- S-band (uplink/downlink) RF links
- Ranging tones
- Receives and demodulates telemetry subcarrier
- RF measurements
  - Power
  - Frequency
  - Spectral purity
  - Modulation index
  - Time delay
- Measure command receiver sensitivity via power and frequency control of RF uplink
- Modulation index adjustment capability

# TOMS-EP
# Mission Operations

T. Watson

# Presentation Outline

- Flight Operations Concept
- Data Flow Overview
- Uplink Activities/Command Types/Dumps
- Science Capture
- Routine Pass
- Routine 24 Hour Activities
- Contingency Operations

# Flight Operations Concept

- Early Mission
  - Maximum ground station coverage, short contacts
  - Twenty-four hour/day support
  - Autonomous deployment
  - Autonomous initial ascent burns
  - Intensive orbit determination activities
  - Subsystem activation and checkout

- Routine Operations
  - Nadir pointed using scan wheels
  - Five to 8 contacts per day, 10-12 minutes each
  - Stored commands to perform most spacecraft and instrument operations
  - Twenty-four hour/day support
  - Science data capture and Level 0 processing
  - No attitude maneuver or orbit adjust requirements

# TOMS-EP Command and Telemetry Flow

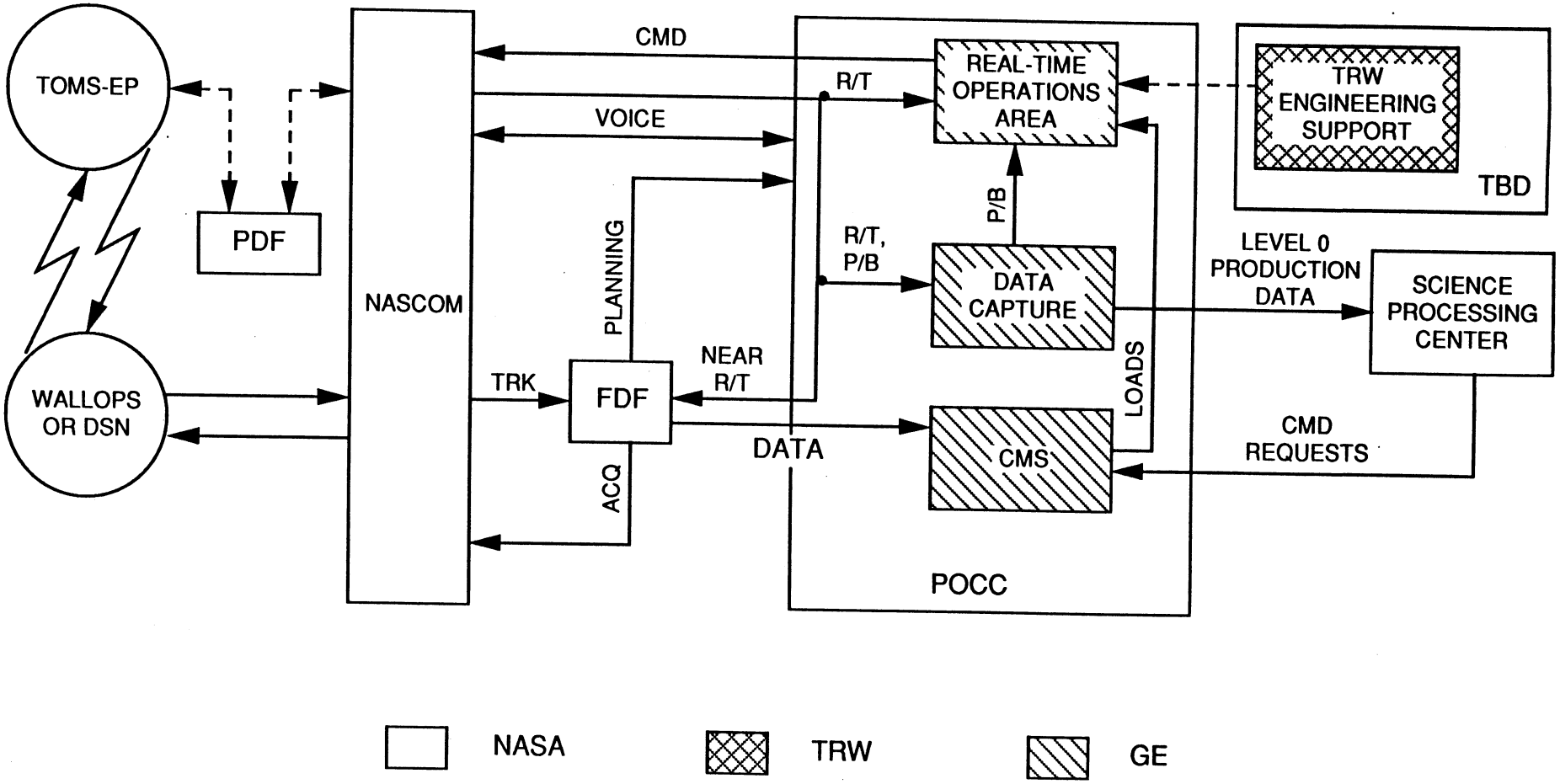

# Uplink Activities

- Real Time Commands
  - Early mission subsystems configuration
  - Link management
  - Mass memory playbacks

- Absolute Time Commands (ATCs)
  - Ascent $\Delta$ Vs and maneuver activities
  - Link management
  - Orbital event control - instrument cals, lunar eclipse requirements, etc.
  - RTCS activations
- Relative Time Command Sequences (RTCSs)
  - Deployment
  - Autonomous ascent
  - Safe mode configurations
  - Link management
  - Repetitive operations

# Uplink Activities (Continued)

- Memory Loads
  - Attitude initialization
  - Ephemeris
  - Attitude and $\Delta V$ maneuver targets
  - Alignments and gains "tweaking" (key parameters data base)

- Details of specific operations will be provided in "Initial Activation and Checkout Procedures," MO-06.

# TOMS-EP Command Format

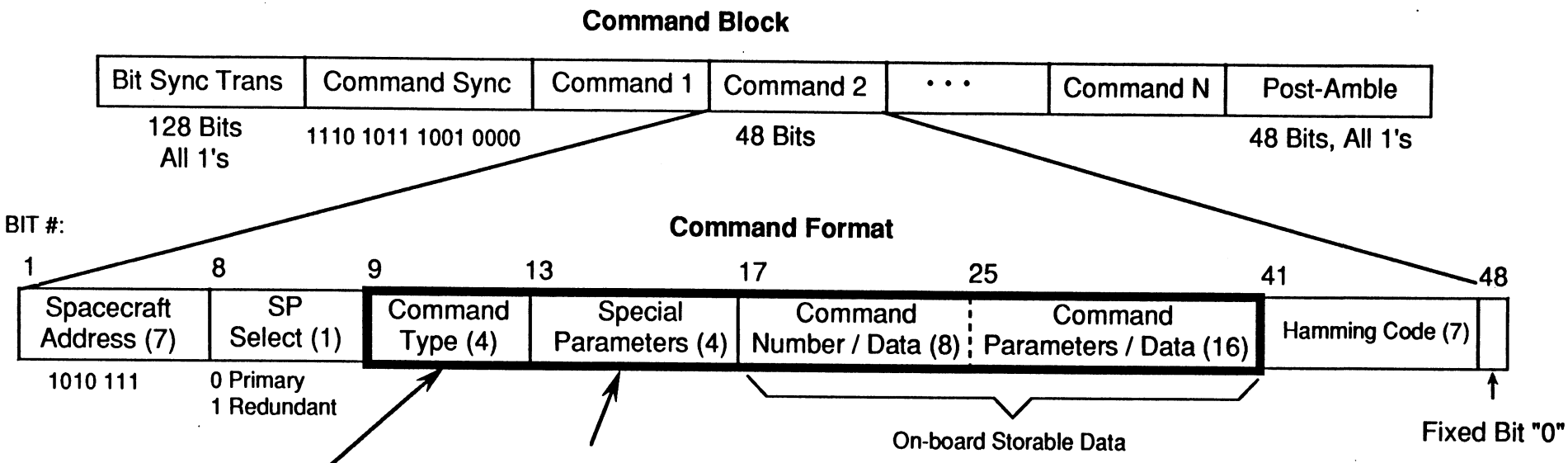


Hex: 0 Reserved
1 Real-time
2 ATC
3 Spare
4 RTCS
5 KPD Load
6 SP Data Load
7 SP Code Load
8 DP Data Load
9 DP Code Load
A Manage CIB
B-E Spare
F Special H/W Cmd

Hex: 0 Continue Cmd
1 End of Cmd, Type = 0 - 4, A - F
2 RTCS Reference
3 Clear CIB
4 Transfer CIB
5 Reset CIB Cmd Cntr
6 Restart CIB Load
7 End of Cmd, 1 Data Byte, Type = 5 - 9
8 End of Cmd, 2 Data Bytes, Type = 5 - 9
9 End of Cmd, 3 Data Bytes, Type = 5 - 9

# Real-Time Commands

**Real-time commands consist of only the basic command structure.**

| Command Type | Special Parameter | Uplink Data | | |
|---|---|---|---|---|
| 1 | 1 | Command # | Arg 1 | 00 |

**Sample 2-Byte Real-Time Command Upload**

| Command Type | Special Parameter | Command Data | | |
|---|---|---|---|---|
| 1 | 0 | Command # | Arg 1 | Arg 2 |
| 1 | 1 | Arg 3 | 00 | 00 |

**Sample 4-Byte Real-Time Command Upload**

# Absolute Time Command Definition

- COMMANDS WITH UTC TIME TAGS WHICH CAN PERFOM OPERATIONS BASED ON ORBITAL POSITION.
- TIME-TAGGED TO NEAREST SECOND.
- AN ATC CAN BE USED TO CONTROL AN RTCS OR ISSUE A REAL TIME COMMAND.
- ATCs WILL PROVIDE THE MANAGEMENT OF ROUTINE ON-ORBIT OPERATIONS. THE RTCSs WILL PROVIDE THE DETAILED COMMAND SEQUENCES.
- AN ATC CAN BE CREATED, DELETED, AND DUMPED FOR GROUND VERIFICATION.
- CAPABILITY IS PROVIDED FOR 512 ATCs IN THE COMMAND STORAGE AREA (CSA).
- AFTER AN ATC HAS TIMED OUT, THAT COMMAND SLOT BECOMES AVAILABLE FOR ADDITIONAL ATCs TO BE UPLINKED.
- GROUND OPERATIONS IS RESPONSIBLE FOR MAINTAINING SUFFICIENT SPACE IN THE CSA FOR REQUIRED RTCSs.

# Absolute Time Commands (ATCs)

**ATCs contain a 5-byte time tag with 1-second resolution, followed by a basic command.**

| Time Tag "day (2): hour (1): minute (1): second (1)" (5 bytes) | Command Number (1 byte) | Command Arguments (5 bytes max) |
|---|---|---|

**Absolute-Timed Command Structure**

**The time tag and command number in an ATC load must begin in the first byte of the uplink data area.**

| Command Type | Special Parameter | Command Data | | |
|---|---|---|---|---|
| 2 | 0 | Time Tag (Day) | | Time Tag (Hour) |
| 2 | 0 | Time Tag (Minute) | Time Tag (Second) | 00 |
| 2 | 1 | Command # | Arg 1 | 00 |

**Sample 2-Byte ATC and Time Tag Upload**

# Command Storage Area (CSA) Dump

| SYNC=EB90(HEX) | DUMP ID | | | | | |
|---|---|---|---|---|---|---|
| INDEX # 0 | EXECUTE TIME 1 | CMD # | COMMAND ARGUMENTS (5 MAXIMUM) | | RTCS # | POINTER |
| INDEX # 2 | EXECUTE TIME 2 | CMD # | COMMAND ARGUMENTS | FILL | RTCS # | POINTER |
| INDEX # 9 | EXECUTE TIME 3 | CMD # | COMMAND ARGUMENTS | FILL | RTCS # | POINTER |
| INDEX # 5 | EXECUTE TIME 4 | CMD # | CMD ARGS. | FILL | RTCS # | POINTER |
| INDEX # N | EXECUTE TIME 5 | CMD # | COMMAND ARGUMENTS | FILL | RTCS # | POINTER |
| | | | | | | |
| INDEX # 4 | EXECUTE TIME N | CMD # | COMMAND ARGUMENTS | FILL | RTCS # | POINTER |

NOTES:
1) COMMANDS ARE NOT NECESSARILY STORED IN THE ORDER THEY WILL EXECUTE.
2) DUMP ID = 04 (HEX) = CSA DUMP.
3) DUMP WILL REPEAT FROM SYNC UNTIL DUMP HALTED.
4) N = 512 CMDS MAXIMUM, INCLUDING ATC'S AND ANY ACTIVATED RTCS'S.
5) RTCS # = 1 TO 255 IF CMD IS FROM AN RTCS. 0 = ATC.
6) POINTER CONTAINS INDEX NUMBER OF NEXT CMD TO EXECUTE.
7) INDEX 0 IS ALWAYS CONTAINS NEXT PENDING CMD.
8) POINTER = 0 MEANS THIS INDEX NUMBER IS AVAILABLE FOR OVERWRITE.
9) POINTER = -1 MEANS THIS INDEX NUMBER IS LAST CMD IN CSA.

- The complete CSA can be dumped in approximately 6 minutes in the Computer Dump Telemetry Format (assumes 22 bytes/minor frame of dump data).

# Relative Time Command Sequence Definition

- LIST OF COMMANDS AND DELTA TIME TAGS TO PROVIDE SEQUENCES OF ACTIVITIES WITH PREDETERMINED TIME SPACINGS.

- TIME TAGS ARE IN WHOLE SECONDS, VALUES FROM 0 TO 65,535.

- MOST COMMAND FUNCTIONS CAN BE CONTROLLED BY AN RTCS. SOME EXCEPTIONS:
  - SPECIAL HARDWARE COMMANDS
  - RTCS LOADS
  - CIB OPERATIONS

EXAMPLE - RTCS 26, ROUTINE TOMS SCAN:

| DELTA T (SECONDS) | COMMAND | ELAPSED TIME |
|---|---|---|
| 0 | SELECT NORMAL SCAN MODE | 00:00:00 |
| 4140 | SELCT STANDBY MODE | 01:09:00 |
| 2100 | EXECUTE RTCS 26 | 01:44:00 |

# RTCS Operational Aspects

- AN RTCS CAN BE EXECUTED BY:
  - REAL TIME COMMANDS
  - ABSOLUTE TIME (STORED) COMMANDS
  - SPACECRAFT PROCESSER WAKE-UP/SAFING LOGIC
  - ANOTHER RTCS
  - BY ITSELF (REPEAT FUNCTION)
  - TOMS-EP FLIGHT SOFTWARE ROUTINES

- AN RTCS CAN BE INHIBITED/ENABLED, EXECUTED/HALTED. RTCSs IN PROGRESS ARE TERMINATED ON SP SWITCH-OVER.

- ACTIVATION OF AN RTCS CREATES ABSOLUTE TIME COMMANDS WHICH ARE MERGED WITH PREVIOUSLY EXISTING ATCs.

- AN RTCS CAN BE CREATED, DELETED, EDITTED, AND DUMPED FOR GROUND VERIFICATION.

- CAPABILITY FOR UP TO 255 RTCSs IS PROVIDED.

- A MAXIMUM OF 512 COMMANDS CAN BE STORED IN AN RTCS (LIMITED BY SIZE OF STORED COMMAND STORAGE AREA (CSA).

- TOTAL NUMBER OF RELATIVE TIME COMMAND STORAGE IS 1024 COMMANDS.

- A DEFAULT SET OF RTCSs IS PROVIDED AT SP WAKE-UP FOR KEY EVENTS SUCH AS DEPLOYMENT & SAFE MODE SEQUENCES.

# Relative Time Command Sequences (RTCSs)

**An RTCS is a sequence of basic commands (RTCs) with specified time intervals, in seconds, between their execution times.**

**Sequence XX**

| | | | |
|---|---|---|---|
| **RTC 1** | Delta Time Tag "seconds" (2 bytes) | Command Number (1 byte) | Command Arguments (5 bytes max) |
| **RTC 2** | Delta Time Tag "seconds" (2 bytes) | Command Number (1 byte) | Command Arguments (5 bytes max) |
| • • • | | | |
| **RTC N** | Delta Time Tag "seconds" (2 bytes) | Command Number (1 byte) | Command Arguments (5 bytes max) |

**Relative-Timed Command Sequence Structure**

# Relative Time Command Sequences (RTCSs) (Continued)

**An RTCS reference must precede an RTCS upload.**

**The time tag and command number in an RTCS load must begin in the first byte of the uplink data area.**

| Command Type | Special Parameter | Command Data | | |
|---|---|---|---|---|
| 3 | 2 | Sequence Number | RTC Number | |
| 3 | 0 | Delta Time Tag (Seconds) | | 00 |
| 3 | 1 | Command # | Arg 1 | 00 |
| 3 | 0 | Delta Time Tag (Seconds) | | 00 |
| 3 | 0 | Command # | Arg 1 | Arg 2 |
| 3 | 1 | Arg 3 | 00 | 00 |
| 3 | 0 | Delta Time Tag (Seconds) | | 00 |
| 3 | 0 | Command # | Arg 1 | Arg 2 |
| 3 | 1 | Arg 3 | Arg 4 | 00 |

**Sample 3-Command RTCS Upload**

# RTCS Dump

| RTC #: | | | | |
|---|---|---|---|---|
| | SYNC = EB90 (HEX) | DUMP ID | RTCS # | T/F FLAG |
| 1 | DELTA TIME-TAG | CMD # | CMD PARAMETERS | FILL |
| 2 | DELTA TIME-TAG | CMD # | CMD PARAMETERS | |
| 3 | DELTA TIME-TAG | CMD # | CMD PARAMETERS | FILL |
| 4 | DELTA TIME-TAG | CMD # | CMD PARAMETERS | FILL |
| 5 | DELTA TIME-TAG | CMD # | CMD PARAMETERS | FILL |
| 6 | DELTA TIME-TAG | CMD # | CMD PARAMETERS | FILL |
| | DELTA TIME-TAG | CMD # | CMD PARAMETERS | FILL |
| | DELTA TIME-TAG | CMD # | CMD PARAMETERS | FILL |
| | DELTA TIME-TAG | CMD # | CMD PARAMETERS | FILL |
| N | DELTA TIME-TAG | CMD # | CMD PARAMETERS | FILL |

NOTES:
1) DUMP ID = 03 (HEX) = RTCS DUMP.
2) DUMP WILL REPEAT FROM SYNC UNTIL DUMP HALTED.
3) TRUE/FALSE FLAG INDICATES ENABLED/INHIBITED, RESPECTIVELY.
4) N = 512 COMMANDS MAXIMUM PER RTCS DUE TO CSA SIZE OF 512.
5) COMMANDS ARE DUMPED IN ORDER OF EXECUTION.

# RTCS Directory

| RTCS # | # OF CMDS | DESCRIPTION | PHASE LOADED | USED DURING |
|---|---|---|---|---|
| 1 | 105 | PRI SP WAKE-UP, DEPLOY, SUN ACQ | PROM FIXED | DEPLOY |
| 2 | 104 | RDNT SP WAKE-UP, DEPLOY, SUN ACQ | PROM FIXED | DEPLOY |
| 3 | 5 | CSSA CHECK OKAY, ACQ SUN & SET DEPLOY FF | PROM FIXED | DEPLOY |
| 4 | 28 | CONFIG FOR SAFE HOLD, PRIME SP | PROM FIXED | SAFING |
| 5 | 28 | CONFIG FOR SAFE HOLD, RDNT SP | PROM FIXED | SAFING |
| 6 | 51 | CONFIG FOR SAFE PWR/SUN PT RECOVERY, PRIME SP | PROM FIXED | SAFING |
| 7 | 51 | CONFIG FOR SAFE PWR/SUN PT RECOVERY, RDNT SP | PROM FIXED | SAFING |
| 8 | 0 | SPARE | | |
| 9 | 23 | CONFIG FOR SAFE PWR/LONG TERM HOLD, PRIME SP | PROM FIXED | SAFING |
| 10 | 23 | CONFIG FOR SAFE PWR/LONG TERM HOLD, RDNT SP | PROM FIXED | SAFING |
| 11 | 30 | ASCENT MASTER SEQUENCE | PROM FIXED | DEPLOY/ASCENT |
| 12 | 3 | CSSA CHECK FAILS - DP CPUs OFF | PROM FIXED | DEPLOY |
| 13 | 0 | CONFIG FOR PREMATURE WAKE-UP | PROM FIXED | BOOST |
| 14 | 0 | CONFIG FOR STANDBY MODE | PROM FIXED | A & T |
| 15 | 0 | SPARE | | |
| 16 | 0 | SPARE | | |
| 17 | 0 | SPARE | | |
| 18 | 0 | SPARE | | |
| 19 | 2 | SELECT SP DUMP FORMAT FOR 12 MINUTES | PROM FIXED | ROUTINE OPS |
| 20 | 4 | CONFIG FOR XMTR A ON, RANGING OFF, 10 MINUTES | PROM FIXED | ROUTINE OPS |
| 21 | 6 | CONFIG FOR XMTR A ON, RANGING ON, 10 MINUTES | PROM FIXED | ROUTINE OPS |
| 22 | 4 | CONFIG FOR XMTR B ON, RANGING OFF, 10 MINUTES | PROM FIXED | ROUTINE OPS |
| 23 | 6 | CONFIG FOR XMTR B ON, RANGING ON, 10 MINUTES | PROM FIXED | ROUTINE OPS |
| 24 | 2 | CLOCK ADJUST, 12 HR REPEAT | SCIENCE OPS | ROUTINE OPS |
| 25 | 5 | BATTERY/OAS TANK HEATER CONTROL | PROM FIXED | ROUTINE OPS |
| 26 | 3 | NORMAL SCAN, REPEAT EVERY ORBIT | SCIENCE OPS | SCIENCE OPS |
| 27 | 2 | SOLAR CAL, REPEAT ONCE PER DAY | SCIENCE OPS | SCIENCE OPS |
| 28 | 2 | WAVELENGTH CAL, REPEAT ONCE PER DAY | SCIENCE OPS | SCIENCE OPS |
| 29 | 2 | ELECTRONICS CAL, REPEAT ONCE PER DAY | SCIENCE OPS | SCIENCE OPS |
| 30 | 2 | REFLECTANCE CAL, REPEAT ONCE PER DAY | SCIENCE OPS | SCIENCE OPS |
| 31 | 4 | SAFE INSTRUMENT (ALL OFF) | PROM FIXED | ALL |
| 32 | 1 | SELECT STANDBY MODE (STOW OPTICS) | PROM FIXED | ALL |
| TOTAL: | 496 | | | |

# Memory Loads

**Memory loads consist of a memory address location, and the data to be placed in memory starting at the specified address.**

- The length of the data is limited only by the size of the CIB.
- Memory loads to multiple locations within one processor may coexist in the CIB.

| Memory Address (3 bytes) | Memory Load Data (n bytes) |
|---|---|

**Memory Load Structure**

| Command Type | Special Parameter | Command Data | |
|---|---|---|---|
| 5 | 0 | Address | |
| 5 | 0 | Data | |
| 5 | 8 | Data | 00 |

**Sample 5-Byte SP RAM Data Upload**

# General Memory Dump

| SYNC = EB90 (HEX) | DUMP ID | STARTING ADDRESS |
|---|---|---|
| DATA | | |
| DATA | | |
| DATA | | |
| DATA | | |
| DATA | | |
| DATA | | |
| | | |
| | | |
| DATA | | |
| DATA | | |
| DATA | | |
| DATA | | |

NOTES:
1) DUMP ID = O3 (HEX) = SP MEMORY DUMP, 08 (HEX) = DP MEMORY DUMP.
2) DUMP WILL REPEAT FROM SYNC UNTIL DUMP HALTED.
3) DUMP CAN BE ANY SPECIFIED LENGTH, UP TO 64K BYTES MAXIMUM.

# Minor Frame and Header Overview

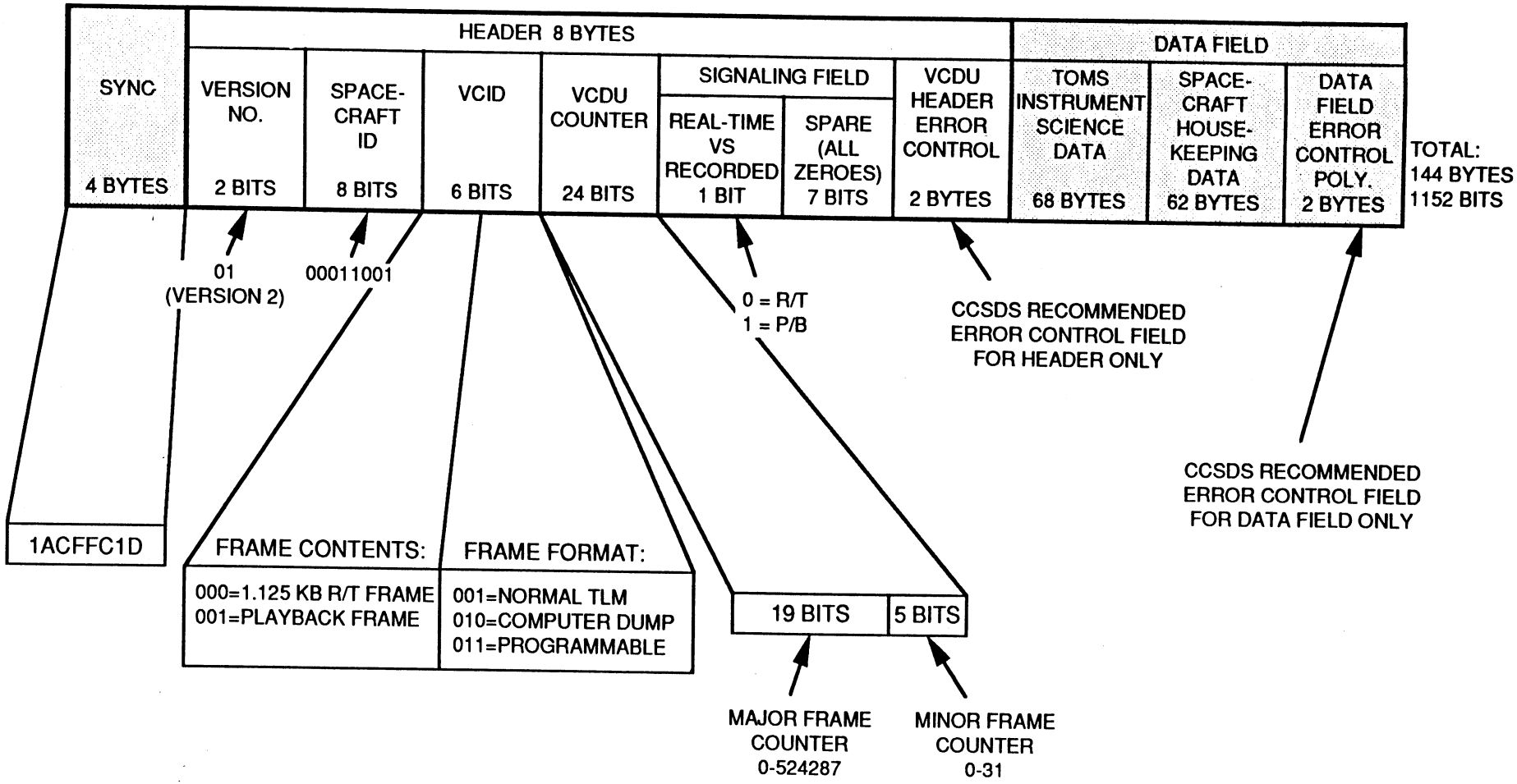

# Instrument/Spacecraft Telemetry Allocations

| SYNC | HEADER 8 BYTES | | | | | | | DATA FIELD | | | |
|---|---|---|---|---|---|---|---|---|---|---|---|
| | VERSION NO. | SPACE-CRAFT ID | VCID | VCDU COUNTER | SIGNALING FIELD | | VCDU HEADER ERROR CONTROL | TOMS INSTRUMENT SCIENCE DATA | SPACE-CRAFT HOUSE-KEEPING DATA | DATA FIELD ERROR CONTROL POLY. | TOTAL: 144 BYTES 1152 BITS |
| | | | | | REAL-TIME VS RECORDED | SPARE (ALL ZEROES) | | | | | |
| 4 BYTES | 2 BITS | 8 BITS | 6 BITS | 24 BITS | 1 BIT | 7 BITS | 2 BYTES | 68 BYTES | 62 BYTES | 2 BYTES | |

FRAME 0 BYTES:

| | 4 | 7 | 27 | 9 | 21 | |
|---|---|---|---|---|---|---|
| | INST SYNC* | ANALOG TLM | STATUS TLM | TIME STAMP | SCIENCE | DATA |
| 1 | SCIENCE DATA - 68 BYTES | | | | | |
| 2 | SCIENCE DATA - 68 BYTES | | | | | |
| 3 | SCIENCE DATA - 68 BYTES | | | | | |
| 4 | SCIENCE DATA - 68 BYTES | | | | | |
| 5 | SCIENCE DATA - 68 BYTES | | | | | |
| 6 | SCIENCE DATA - 68 BYTES | | | | | |
| 7 | SCIENCE DATA - 34 BYTES | | | RLL | FILL/NEXT SCAN | |

*INST SYNC CODE WILL BE COMPLEMENTED (BIT INVERTED) EVERY OTHER SCAN.

463 BYTES OF SCIENCE DATA.
512 BYTES TOTAL DATA / SCAN

2 BYTES

32 BYTES

# Computer Dump Field Allocation

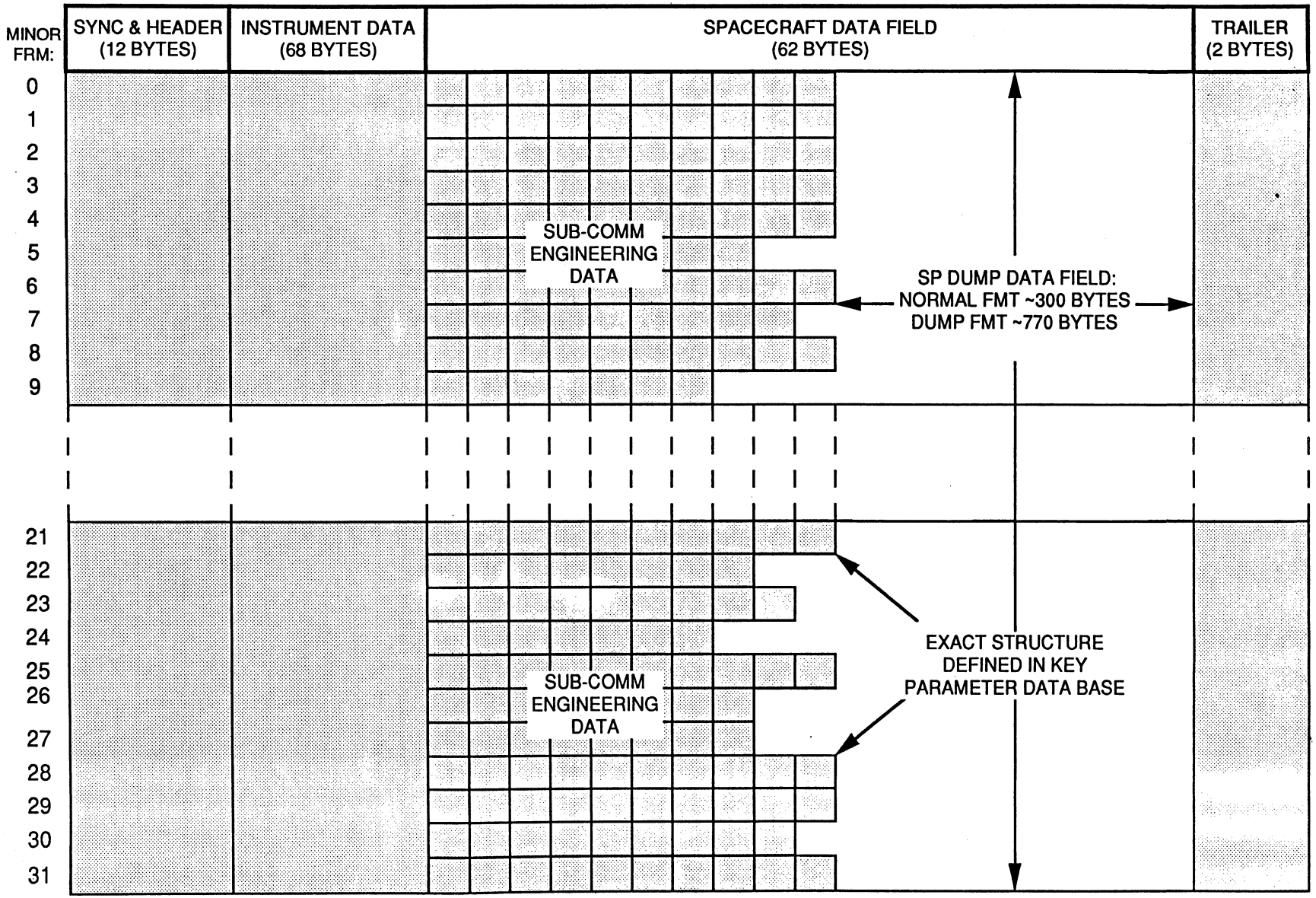

# Science Data Capture

- Instrument gathers data every daylight pass as controlled by repeating RTCSs
- Capability to record 24 hours of science on-board
- Madrid and Canberra have 56 KBPS NASCOM lines and can route 50.625 KBPS playback stream to POCC, or can strip and ship real time data from 202.5 KBPS playback and do low rate playbacks post-pass
- Wallops and Goldstone have ≥224 KBPS NASCOM lines
- Playback times for 24 hours of data are 8.04 minutes at 202.5 KBPS, or 32.7 minutes at 50.625 KBPS
- Typically, 50 to 90 minutes of ground coverage will be scheduled daily. Good margins exist even under worst case configurations

# Routine Pass Timeline

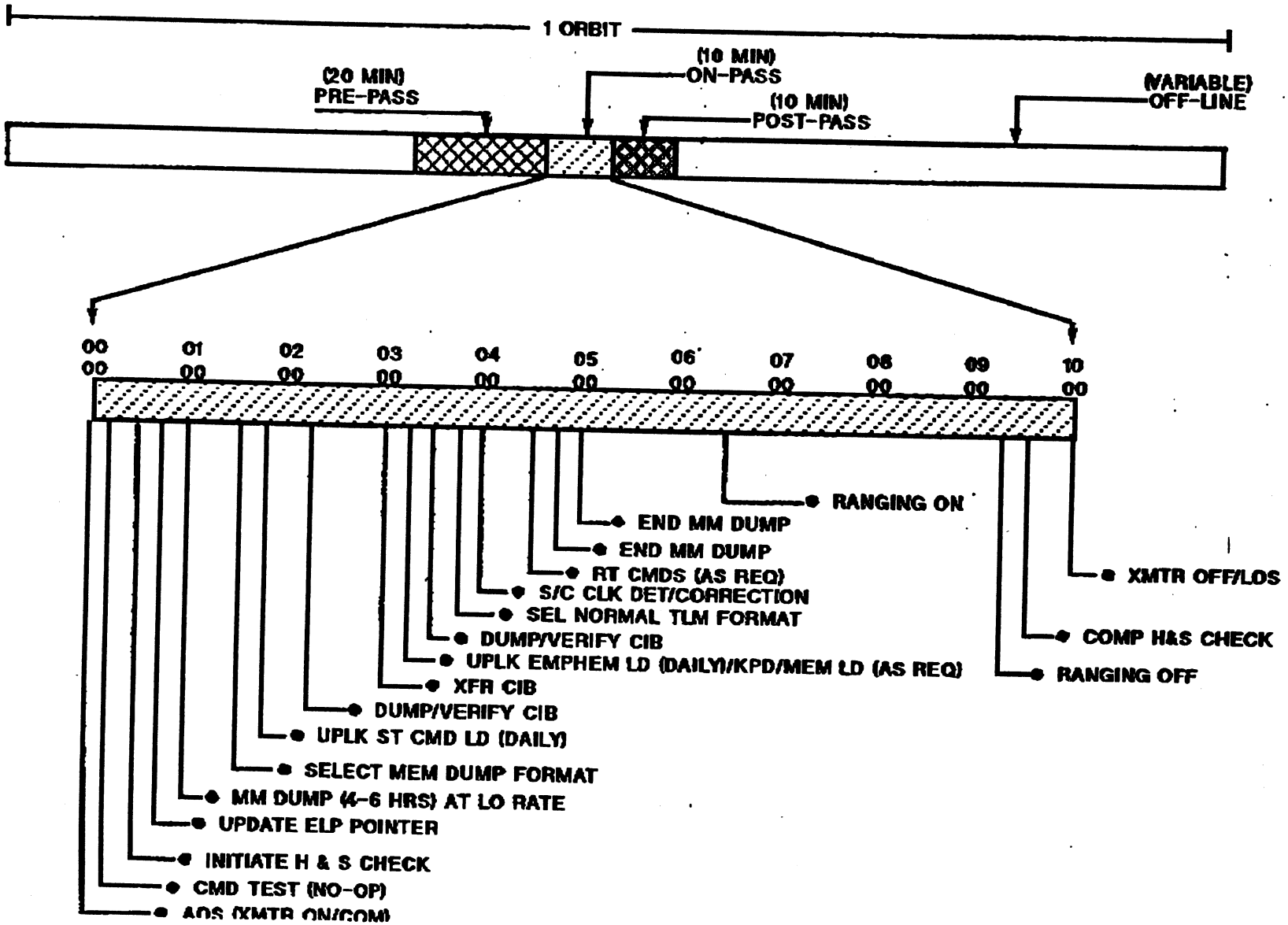

# Twenty-Four Hour Timeline

| TIME | ACTIVITY | COMMANDS | DURATION (h:mm:ss) |
|---|---|---|---|
| 0:00 | SUNRISE/TOMS NORMAL SCAN | | |
| | | RTCS 26, 104 MIN REPEAT | 1:09:00 |
| 0:50 | **AOS CANBERRA** | | :10:00 |
| | MASS MEMORY PLAYBACK @ 202.5KBPS | | :02:00 |
| | ROUTINE STATE OF HEALTH CHECKS | | |
| | UPDATE S/C EPHEMERIS | | :01:00 |
| | TRACKING | | :07:30 |
| 1:00 | **LOS CANBERRA** | | |
| 1:09 | ECLIPSE/TOMS TO STANDBY | | |
| 1:44 | SUNRISE/TOMS NORMAL SCAN | | |
| | | RTCS 26, 104 MIN REPEAT | 1:09:00 |
| 2:53 | ECLIPSE/TOMS TO STANDBY | | |
| 2:58 | ELECTRONICS CAL | | |
| | | RTCS 29, 24 HR REPEAT | :06:00 |
| 3:06 | WAVELENGTH CAL | | |
| | | RTCS 28, 24 HR REPEAT | :06:00 |
| 3:28 | SUNRISE/TOMS NORMAL SCAN | | |
| | | RTCS 26, 104 MIN REPEAT | 1:09:00 |
| 4:37 | ECLIPSE/TOMS TO STANDBY | | |
| 5:05 | **AOS WALLOPS** | | :10:00 |
| | MASS MEMORY PLAYBACK @ 202.5KBPS | | :02:00 |
| | ROUTINE STATE OF HEALTH CHECKS | | |
| | UPLINK NEXT DAY'S STORED COMMAND LOAD | | :03:00 |
| | TRACKING | | :07:30 |
| 5:12 | SUNRISE/TOMS NORMAL SCAN | | |
| | | RTCS 26, 104 MIN REPEAT | 1:09:00 |
| 5:15 | **LOS WALLOPS** | | :10:00 |
| | CLOCK ERROR DETERMINATION | | :05:00 |
| 6:21 | ECLIPSE/TOMS TO STANDBY | | |
| 6:56 | SUNRISE/TOMS NORMAL SCAN | | |
| | | RTCS 26, 104 MIN REPEAT | 1:09:00 |
| 8:05 | ECLIPSE/TOMS TO STANDBY | | |
| 8:40 | SUNRISE/TOMS NORMAL SCAN | | |
| | | RTCS 26, 104 MIN REPEAT | 1:09:00 |
| 9:49 | ECLIPSE/TOMS TO STANDBY | | |

# Twenty-Four Hour Timeline (Continued)

| TIME | ACTIVITY | COMMANDS | DURATION (h:mm:ss) |
|---|---|---|---|
| 9:51 | **AOS MADRID** | | |
| | MASS MEMORY PLAYBACK @ 202.5KBPS | | :10:00 |
| | ROUTINE STATE OF HEALTH CHECKS | | :02:00 |
| | BACKUP SITE FOR STORED CMD UPLINK | | |
| | TRACKING | | :03:00 |
| 10:01 | **LOS MADRID** | | :07:30 |
| 10:24 | SUNRISE/TOMS NORMAL SCAN | | |
| | | RTCS 26, 104 MIN REPEAT | 1:02:00 |
| 11:26 | SOLAR IRRADIANCE CAL | | |
| | | RTCS 22, 24 HR REPEAT | :06:00 |
| 11:33 | ECLIPSE/TOMS TO STANDBY | | |
| 12:08 | SUNRISE/TOMS NORMAL SCAN | | |
| | | RTCS 26, 104 MIN REPEAT | 1:09:00 |
| 12:28 | **AOS CANBERRA** | | |
| | MASS MEMORY PLAYBACK @ 202.5KBPS | | :10:00 |
| | ROUTINE STATE OF HEALTH CHECKS | | :02:00 |
| | BACKUP SITE FOR STORED CMD UPLINK | | |
| | TRACKING | | :03:00 |
| 12:38 | **LOS CANBERRA** | | :07:30 |
| 13:17 | ECLIPSE/TOMS TO STANDBY | | |
| 13:52 | SUNRISE/TOMS NORMAL SCAN | | |
| | | RTCS 26, 104 MIN REPEAT | 1:09:00 |
| 15:01 | ECLIPSE/TOMS TO STANDBY | | |
| 15:36 | SUNRISE/TOMS NORMAL SCAN | | |
| | | RTCS 26, 104 MIN REPEAT | 1:09:00 |
| 16:45 | ECLIPSE/TOMS TO STANDBY | | |
| 16:49 | **AOS WALLOPS** | | |
| | COMPLETE MASS MEMORY PLAYBACK @ 202.5KBPS | | :10:00 |
| | ROUTINE STATE OF HEALTH CHECKS | | :08:30 |
| | BACKUP SITE FOR STORED CMD UPLINK | | |
| | TRACKING | | :03:00 |
| 16:59 | **LOS WALLOPS** | | :01:00 |
| | CLOCK ERROR DETERMINATION | | :05:00 |
| 17:20 | SUNRISE/TOMS NORMAL SCAN | | |
| | | RTCS 26, 104 MIN REPEAT | 1:09:00 |
| 18:29 | ECLIPSE/TOMS TO STANDBY | | |

# Twenty-Four Hour Timeline (Continued)

| TIME | ACTIVITY | COMMANDS | DURATION (h:mm:ss) |
|---|---|---|---|
| 19:04 | SUNRISE/TOMS NORMAL SCAN | | |
| | | RTCS 26, 104 MIN REPEAT | 1:09:00 |
| 20:13 | ECLIPSE/TOMS TO STANDBY | | |
| 20:20 | REFLECTANCE CAL | | |
| | | RTCS 25, 24 HR REPEAT | :15:00 |
| 20:48 | SUNRISE/TOMS NORMAL SCAN | | |
| | | RTCS 26, 104 MIN REPEAT | 1:09:00 |
| 21:57 | ECLIPSE/TOMS TO STANDBY | | |
| 22:32 | SUNRISE/TOMS NORMAL SCAN | | |
| | | RTCS 26, 104 MIN REPEAT | 1:09:00 |
| 22:33 | **AOS MADRID** | | :10:00 |
| | MASS MEMORY PLAYBACK @ 202.5KBPS | | :02:00 |
| | UPDATE S/C CLOCK | | :01:00 |
| | ROUTINE STATE OF HEALTH CHECKS | | |
| | LAST OPPORTUNITY FOR STORED CMD UPLINK | | :03:00 |
| | TRACKING | | :07:30 |
| 23:41 | ECLIPSE/TOMS TO STANDBY | | |
| 23:43 | **LOS MADRID** | | |
| 0:16 | SUNRISE/TOMS NORMAL SCAN | | |
| | | RTCS 26, 104 MIN REPEAT | 1:09:00 |

# Contingency Operations

- Contingency planning to be provided in "Flight Operations Handbook," D19828
- Currently planning to provide information as follows:
  - Recovery from loss of communication/fail to acquire
  - Recovery from Safe Hold Mode
  - Recovery from Safe Power Mode
  - Recovery from UV/OV trip
  - Reconfigurations following subsystem fault isolations (selected cases)

    Examples: Configure for Normal Science Mode with alternate gyro

    Configure Normal Backup Mode 1 (scan wheel 2 failed)

# TOMS-EP
# Performance Assurance

# Performance Assurance Agenda

| | |
|---|---|
| System Performance Verification | J. Giglio |
| EMI/EMC Verification | R. Bal |
| Spacecraft Test | J. Durschinger |
| Reliability/FMEA | B. Woerner |
| System Safety | D. McGraw |
| Contamination Control | K. Henderson |
| Materials and Processes | M. Hirsch |
| EEE Parts | G. Penney |
| Hardware Quality Assurance | L. Irwin |
| Software Quality Assurance | G. Walsh |

# Reliability

# Reliability Agenda

- Summary
- System Predictions
- FMEA - Critical Items List
- Limited Life Items List
- Trend Analysis Parameters

# TOMS-EP Reliability Summary

- Reliability program implemented in accordance with TOMS-EP Reliability Implementation Plan (PA-03)

- Reliability requirements defined in TOMS-EP System Specification (SY1-0012)
  - 0.90 for 2 years (spacecraft bus reliability)
  - Minimize single point failures
  - Critical item list and controls plans for severity categories 1, 1R, 1S or 2 (mission or safety critical or nonredundant equipment)

- Reliability predictions and FMEAs updated to CDR design
  - Subcontractor analyses reviewed, approved, and integrated into system analyses
  - System analyses coordinated across all program elements (safety, EDI, redundancy management, I&T, etc.)

# TOMS-EP Reliability Summary (Continued)

- 0.95 predicted reliability exceeds 2-year 0.90 requirement
  - Parts count method implemented. Yields conservative estimate
- FMEAs identified a very limited number of critical failure modes
  - Critical item control plans are being developed
- Limited life items identified
  - Life test plans in place
- Trend parameters identified
  - Trend parameters are being integrated into integration and test planning

# TOMS-EP System Predictions

| SUBSYSTEM | ALLOCATIONS | 2 YEAR PREDICTIONS | 3 YEAR PREDICTIONS |
|---|---|---|---|
| Electrical Power & Distribution Subsystem (EPDS) | 0.975 | 0.9835 | 0.9743 |
| Structure and Mechanisms Subsystem (S&MS) | 0.999 | 0.9998 | 0.9998 |
| Thermal Control Subsystem (TCS) | 0.995 | 0.99999 | 0.99997 |
| Orbital Adjust Subsystem (OAS) | 0.993 | 0.9938 | 0.9908 |
| Attitude Control & Determination Subsystem (ACDS) | 0.970 | 0.9918 | 0.9823 |
| Communications and Data Handling Subsystem (C&DH) | 0.965 | 0.9831 | 0.9638 |
| TOMS Instruments | 1.000 | 1.0000 | 1.0000 |
| TOMS-EP System | 0.900 | 0.9528 | 0.9136 |

# TOMS-EP System Reliability Block Diagram

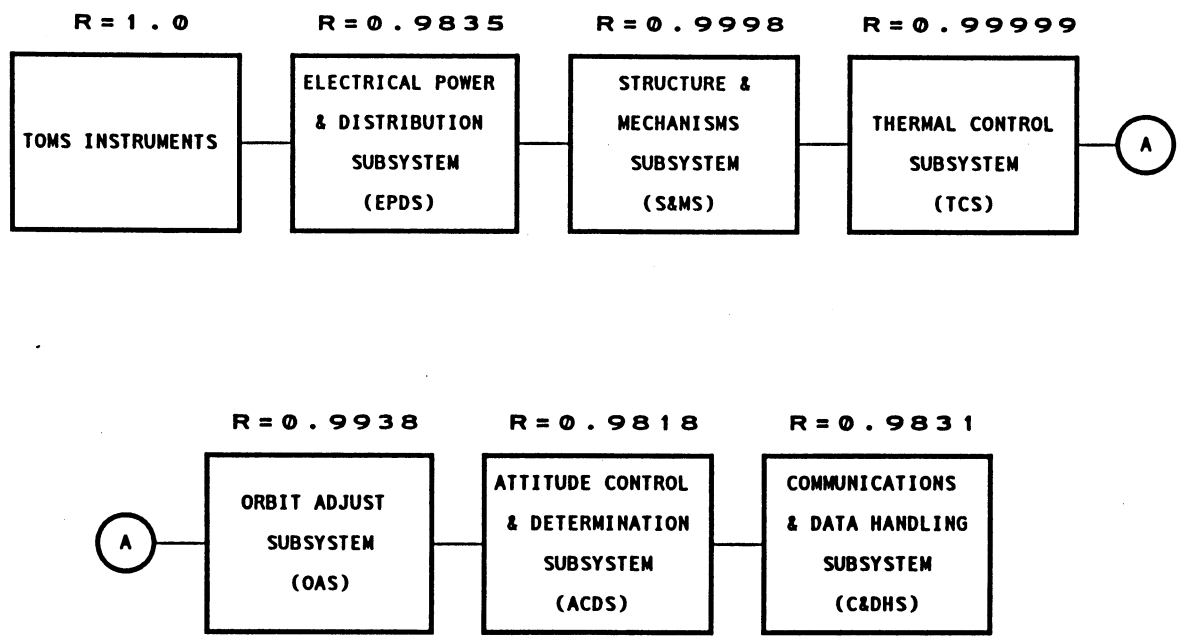


$$R_{(2\ YR)} = 0.9527$$

# TOMS-EP Critical Items List

| ITEM | FAILURE MODE | SEVERITY LEVEL | JUSTIFICATION FOR RETENTION |
|---|---|---|---|
| PROPELLANT TANK/DIAPHRAGM | EXTERNAL LEAKAGE, TANK RUPTURE OR DIAPHRAGM FAILURE | 1,2 | - STRESS/FRACTURE ANALYSES VERIFY DESIGN MARGINS<br>- QUAL SINE VIBRATION, PROOF PRESSURE, EXTERNAL LEAKAGE, AND DIAPHRAGM PHYSICAL PROPERTIES TESTS<br>- RADIOGRAPHIC AND PENETRANT WELD INSPECTIONS |
| PRIMARY (SOLAR ARRAY WING) HINGE | HINGE BINDS DURING SOLAR ARRAY DEPLOYMENT | 2 | - TITANIUM WASHERS BETWEEN HINGE HALVES PROVIDE REDUNDANT ROTATING SURFACES<br>- ROTATING SURFACES BURNISHED WITH MOLYBDENUM-DISULFIDE TO REDUCE FRICTION<br>- TORQUE VERSUS ANGLE TEST TO VERIFY SPECIFIED TORQUE MARGIN OVER ENTIRE DEPLOYMENT RANGE |
| NITINOL DEVICE | ENVIRONMENTALLY HEATED (AUTO ACTIVIATION) | 2 | - DEVELOPMENT AND QUALIFICATION TESTS VERIFY MARGIN BETWEEN DEPLOYMENT AND AUTO ACTIVATION TEMPERATURES<br>- LOT SAMPLE TESTS VERIFY TEMPERATURE CHARACTERISTICS<br>- ALL DEVELOPMENT, QUALIFICATION AND FLIGHT DEVICES WILL BE FROM THE SAME LOT |
| NITINOL FRANGIBOLT | INCORRECT GAP | 2 | - BOLT PRELOADED TO 63% OF RATED TENSILE STRENGTH<br>- LOCKING NUT WILL BE USED TO PREVENT LOOSING OF BOLT<br>- LOT SAMPLE TESTS WILL VERIFY BOLT BREAK CHARACTERISTICS<br>- ALL DEVELOPMENT, QUALIFICATION AND FLIGHT DEVICES WILL BE FROM THE SAME LOT |
| NITINOL WASHER | INCORRECT SIZE | 2 | - LOT SAMPLE TESTS WILL VERIFY WASHER SIZING AND MATERIAL<br>- ALL DEVELOPMENT, QUALIFICATION AND FLIGHT WASHERS WILL BE FROM THE SAME LOT |
| SOLAR ARRAY REGULATOR | INPUT WIRING OPEN OR SHORT TO GROUND, OR OPEN RELAY WIPER | 2 | - ADDITIONAL INSULATION INSTALLED ON BASE OF SAR CHASSIS TO PROVIDE A SECOND INSULATION BARRIER FOR CRITICAL WIRES<br>- SPECIAL CONTROLS FOR STORAGE AND HANDLING OF RELAYS<br>- ADDITIONAL QA INSPECTION CALLOUTS FOR WIRE ROUTING, SHARP EDGES, SOLDER WICKING AND FOR RECORDING THE NUMBER OF RELAY CYCLES |

# TOMS-EP Critical Items List (Continued)

| ITEM | FAILURE MODE | SEVERITY LEVEL | JUSTIFICATION FOR RETENTION |
|---|---|---|---|
| POWER CONTROL UNIT | MAIN POWER BUS SHORT-TO-GROUND | 2 | - INSULATORS INSTALLED BETWEEN BUS BARS AND PCU CHASSIS<br>- ADDITIONAL INSULATION INSTALLED ON PCU CHASSIS TO PROVIDE A SECOND INSULATION BARRIER FOR CRITICAL WIRES<br>- ADDITIONAL QA INSPECTION CALLOUTS FOR WIRE ROUTING, SHARP EDGES AND SOLDER WICKING |
| | OPEN WIPER OF THE DC/DC CONVERTER OUTPUT POWER SELECT RELAY, OR A WIRING SHORT-TO-GROUND ON DC BUS | 2 | - SPECIAL CONTROLS FOR STORAGE AND HANDLING OF RELAYS<br>- ADDITIONAL QA INSPECTION CALLOUTS FOR WIRE ROUTING, SHARP EDGES, WICKING AND FOR RECORDING THE NUMBER OF RELAY CYCLES<br>- ADDITIONAL INSTALLATION INSTALLED ON PCU CHASSIS TO PROVIDE A SECOND INSULATION BARRIER FOR CRITICAL WIRES |
| | OPEN WIPER OF PRIMARY/ REDUNDANT SPACECRAFT PROCESSOR SELECT RELAYS (+5V RELAY OR +/-15V RELAY) | 2 | - SPECIAL CONTROLS FOR STORAGE AND HANDLING OF RELAYS<br>- ADDITIONAL QA INSPECTION CALLOUTS AND FOR RECORDING THE NUMBER OF RELAY CYCLES |
| SPACECRAFT HARNESS ASSEMBLIES | BATTERY TO PCU HARNESS SHORT-TO-GROUND | 2 | - CRITICAL WIRE BUNDLES WILL BE BETA WRAPPED<br>- 1,000V HIGH VOLTAGE INSULATION TEST TO VERIFY THAT THE INSULATION RESISTANCE EXCEEDS 100 MEG OHMS<br>- INSPECTION FOR DAMAGE OF INSTALLED HARNESS ASSEMBLY |
| | SOLAR ARRAY WING HARNESS TO SOLAR ARRAY REGULATOR SHORT-TO-GROUND | 2 | - CRITICAL WIRE BUNDLES WILL BE BETA WRAPPED<br>- 1,000V HIGH VOLTAGE INSULATION TEST TO VERIFY THAT THE INSULATION RESISTANCE EXCEEDS 100 MEG. OHMS<br>- INSPECTION FOR DAMAGE OF INSTALLED HARNESS ASSEMBLIES |
| BATTERY ASSEMBLY | BATTERY CELL SHORT-TO-GROUND | 2 | - DUAL CERAMIC-TO-METAL SEALS ISOLATING BOTH CELL TERMINALS<br>- EACH CELL IS WRAPPED WITH MYLAR INSULATION MATERIAL |
| NADIR (S-BAND) ANTENNA | MECHANICAL DAMAGE DUE TO HANDLING AND/OR DURING INSTALLATION | 2 | - DETAILED MECHANICAL INSTALLATION PROCEDURES TO PREVENT HANDLING/INSTALLATION DAMAGE<br>- INSPECTION FOR DAMAGE PRIOR TO AND AFTER INSTALLATION<br>- ANTENNA RF TESTS PERFORMED PRIOR TO LAUNCH AT WALLOPS FLIGHT FACILITY |
| NADIR RF CABLE ASSEMBLY | OPEN OR SHORT-TO-GROUND OF EITHER THE ANTENNA CONNECTOR OR THE RF ASSEMBLY CONNECTOR | 2 | - ALL RF CABLE CONNECTORS ARE X-RAYED AFTER CABLE INSTALLATION AND MATING<br>- INSPECTION FOR DAMAGE AFTER INSTALLATION AND REVIEW OF X-RAY RESULTS |

# TOMS-EP Limited Life Item List

| SUBSYSTEM | ITEM | SENSITIVE PARAMETERS | IMPACT ON MISSION PARAMETERS | EXPECTED LIFE (RATING) | REQUIRED LIFE (APPLICATION) | DUTY CYCLE | COMMENTS |
|---|---|---|---|---|---|---|---|
| ACDS | Scanwheels | Bearing, Lubricant | Switch to redundant reaction wheel | 5 years | 2 years | 100% | Life tests will be performed. Lubricant loss analysis. |
| ACDS | Reaction Wheel | Bearing, Lubricant | Second failure | 5 years | 2 years | 100% | Life tests will be performed. Lubricant loss analysis. |
| ACDS | Gyro | Bearing, Lubricant | Switch to redundant system | 5 years | 2 years | 100% | Life test will be performed. |
| EPDS | Battery | Temperature, Overcharge bus voltage | Loss of mission | 17000 cycles | 10100 cycles | 100% | Life tests will be performed. Five cells to be tested. |

# TOMS-EP Trend Analysis Parameters

| SUBSYSTEM | COMPONENT | TEST PARAMETER |
|---|---|---|
| C&DHS | TRANSPONDER | - RECEIVER INPUT SENSITIVITY<br>- RECEIVER COMMAND THRESHOLD<br>- TRANSMITTER MODULATION INDEX<br>- TRANSMITTER DOWNLINK FREQUENCY STABILITY<br>- TRANSMITTER OUTPUT POWER LEVEL |
| ACDS | GYRO | - MOTOR CURRENT<br>- RUN-UP-TIME |
| | RWA AND SCAN WHEELS | - MOTOR VOLTAGE<br>- RUN-UP-TIME AND RUN-DOWN-TIME |

# System Safety

# System Safety Requirements

- Contractual policy documents
  - GMI 1771.1, "Range Safety Policies and criteria for GSFC/Wallops Flight Facility"
  - MIL-STD-1574A, "System Safety Program for Space and Missile Systems"
- Contractual technical requirements documents
  - WSMCR 127-1, "Western Space and Missile Center Range Safety Requirements"
  - MIL-STD-1522A, "Safety Requirements for Pressurized System"
  - Contract NAS5-31488, Modification Number 18, "Propellant Lines shall be one fault tolerance against overheating to temperatures greater than 160°F"
- Pending safety requirements
  - Wallops safety document currently in work. Will address WFF ground safety and Orbital Sciences Corporation (SC) flight safety requirements
  - OSC Pegasus requirements issued to industry are man-rated safety requirements for carrier aircraft

# Safety Program

- Systems design safety approach implemented for TOMS-EP
  - Implemented contractual safety requirements (ground safety)
  - Where practical, implemented flight safety design features anticipating man-rated requirements, e.g. two fault electrical and mechanical tolerance for OAS to catastrophic hazards

- Safety analysis activity
  - Preliminary Accident Risk Assessment report (ARAR) prepared and submitted at PDR
  - Hazard analysis completed to WSMCR and MIL-STD-1522A requirements
  - Updated ARAR not planned until flight safety requirements are defined for TOMS-EP

- Preliminary assessment of OSC safety document SSD-TD-005 conducted for OAS System
  - Assessment results reviewed by NASA WFF at interface working group meeting held at WWF

# TOMS-EP Design Safety Features

- Propulsion System (OAS)
  - 2 fault tolerant mechanically and electrically to catastrophic hazards
  - 3 seals on fill and drain module
  - All-welded design
  - Hydrazine fully pressurized to thrusters to eliminate adiabatic detonation and pressure transients
  - Propellant tank safety factor of 1.5:1
  - Tank burst factor of 2 to 1
  - Complies with MIL-STD-1522A
  - 2 of 3 electrical inhibits are monitorable
  - Tank temperature and pressure are telemetered for ground monitoring. Other safety parameters are available for telemetry

- Structures
  - Meets 1.5 S.F. during captive carry

# TOMS-EP Design Safety Features (Continued)

- Materials
  - Use of flammable materials minimized
- Solar Array
  - 2 fault tolerant against premature deployment/operation
- Batteries
  - Over-charge protection
  - Battery telemetry data available
- Premature computer (spacecraft processor) operation
  - Computer locked-out by breakwire inhibits and cannot issue commands until after separation

# Wallops Ground Safety

- Propellant Loading
  - Hydrazine loading tasks are being defined with Wallops
  - Propellant loading will consist of Wallops and TRW personnel

- MGSE
  - Industry-standard safety factors
  - 5 to 1 on lifting equipment
  - Annual proof and nondestructive inspection (NDI) tests

# Safety Certification Process

- Open issues
  - Ground rules need to be established for TOMS-EP safety approval process for Pegasus man-rated program
  - To date, no formal safety certification meetings held with Wallops and OSC
  - Wallops safety document not released

# TOMS-EP
# Contamination Control

Kelly

K. Henderson

# TOMS-EP Contamination Control Plan

## Scope

- The plan for contamination control is end-to-end: from design and component fabrication through launch
- The plan includes protective measures for the instrument from the time it is received by TRW until the entire spacecraft is launched
- Contamination Working Group Meetings are being held at regular intervals, including GSFC, TRW, P-E and OSC, to discuss interface issues

# TOMS-EP Program
# Contamination Control Requirements

- Provide Contamination Control Plan
  - Polymeric materials meeting 0.1% VCM, 1.0% TML (PAR)
  - Bake-out of thermal blankets, solar arrays, and wire harnesses (PAR)
  - I&T in Class 10,000 clean area (System Specification, SY1-0012)
  - Minimize instrument contamination through spacecraft design, Class 100 flow bench (System Specification, SY1-0012)
  - Visibly clean components (derived)
  - Prelaunch cleanliness goal of 750A (derived)

- Provide Source and Effects Analysis
  - Results used to validate design for venting directions/locations and protective covers

# Contamination Control Plan

- Requirements
  - Design/Material Requirements
  - Cleanliness Requirements
  - Vendor-Supplied Hardware
  - Facility/Operational Requirements
  - Launch/Mission Requirements

- Implementation
  - Materials and Processes (including thermal vacuum bake-outs)
  - Fabrication, Assembly, Test, Shipment, including critical operations
  - Monitoring
  - Covering/Purging
  - Cleaning/Inspection
  - Clean Area Practices
  - Launch Site Operations

# TRW Cleanliness Goals (MIL-STD-1246B)

- Spacecraft Bus (derived)
  - End of assembly/close-out all surfaces: 500A goal
  - End of I&T all surfaces: 600A goal
  - Prelaunch all surfaces: 750A goal
  - Using inspection method that verifies surfaces below 750A

# Facility/Operational Requirements

- Facility Air Cleanliness per FED-STD-209D

| Hardware Types | Air Cleanliness Requirement per FED-STD-209D | |
|---|---|---|
| | Instrument Covered | Instrument Uncovered |
| Structural Details Parts/Assembly | Normal shop environment* | |
| Electronic Manufacturing and Solar Arrays | TRW document HQAM 5.5 | |
| Propulsion Subsystem | Class 10,000 | |
| Thermal Control Insulation | Class 300,000 | |
| Spacecraft Bus Assembly and Test | Class 10,000 | |
| Thermal Vacuum Facility (TRW) | Per Contamination Control Plan, D19082 | Per Contamination Control Plan, D19082 |
| Instrument Integration to Spacecraft | Class 10,000 | |
| Instrument Contingency Operation Area (TRW) | | Class 100 (Portable Clean Area) |
| "Satellite" Test and Integration (TRW) | Class 10,000 | |
| Launch Site Operation | Class 10,000 | Class 100 |

*Parts and assemblies cleaned and/or inspected to visibly clean before transport into the Class 10,000 I&T area.

# Contamination Control Implementation – I&T Flow

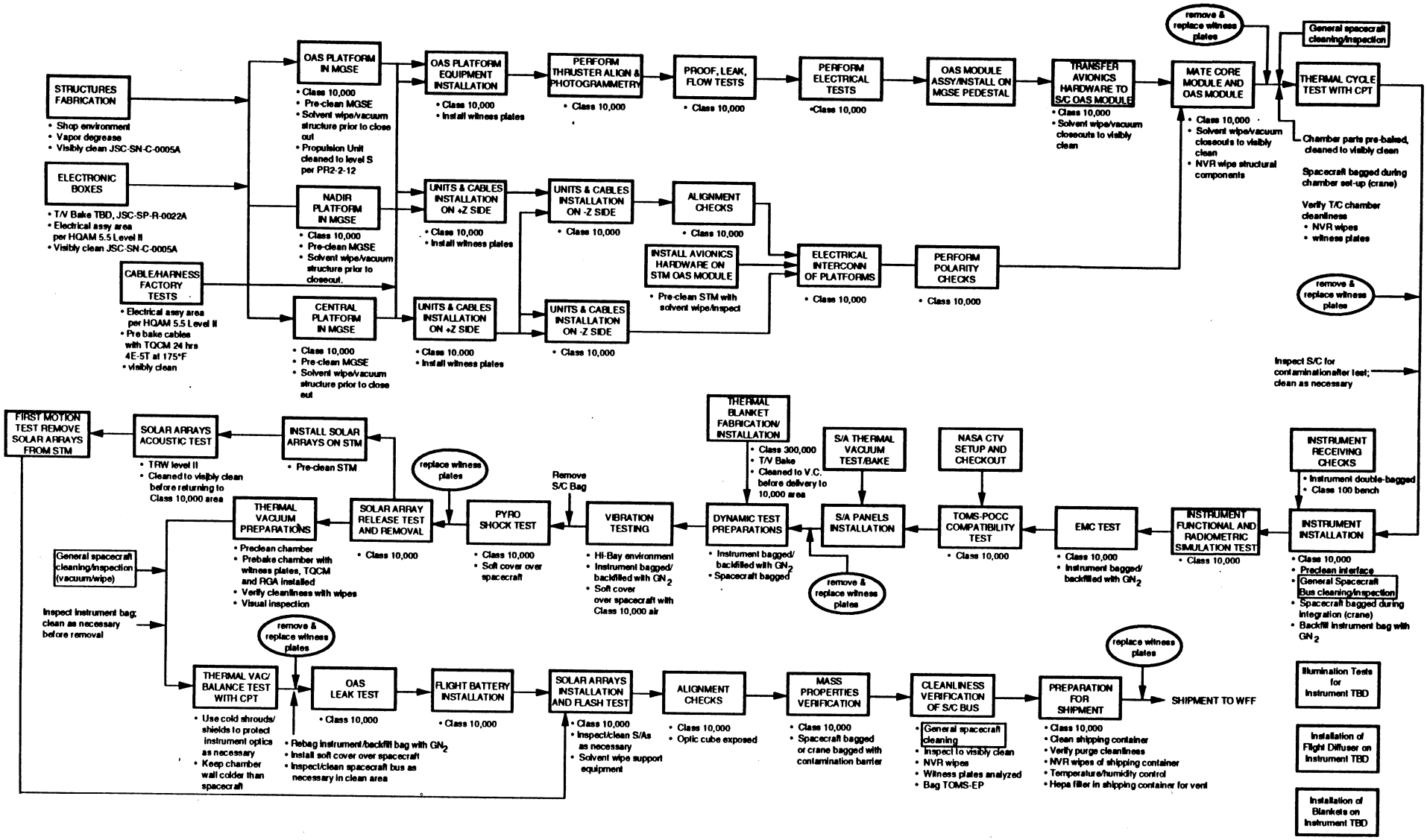

# Contamination Control Implementation – Launch Site Flow

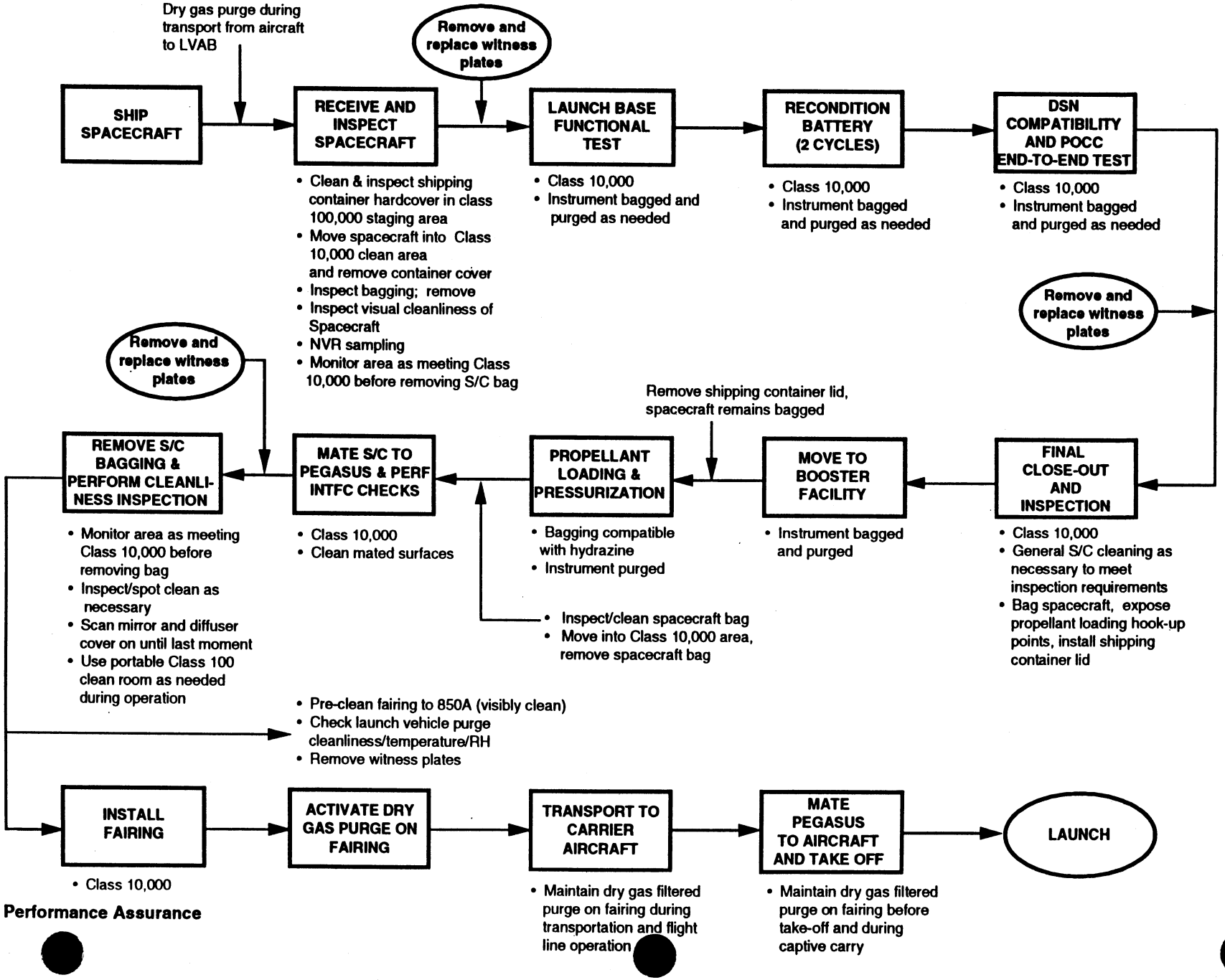

# Contamination Sources and Effects

## Approach

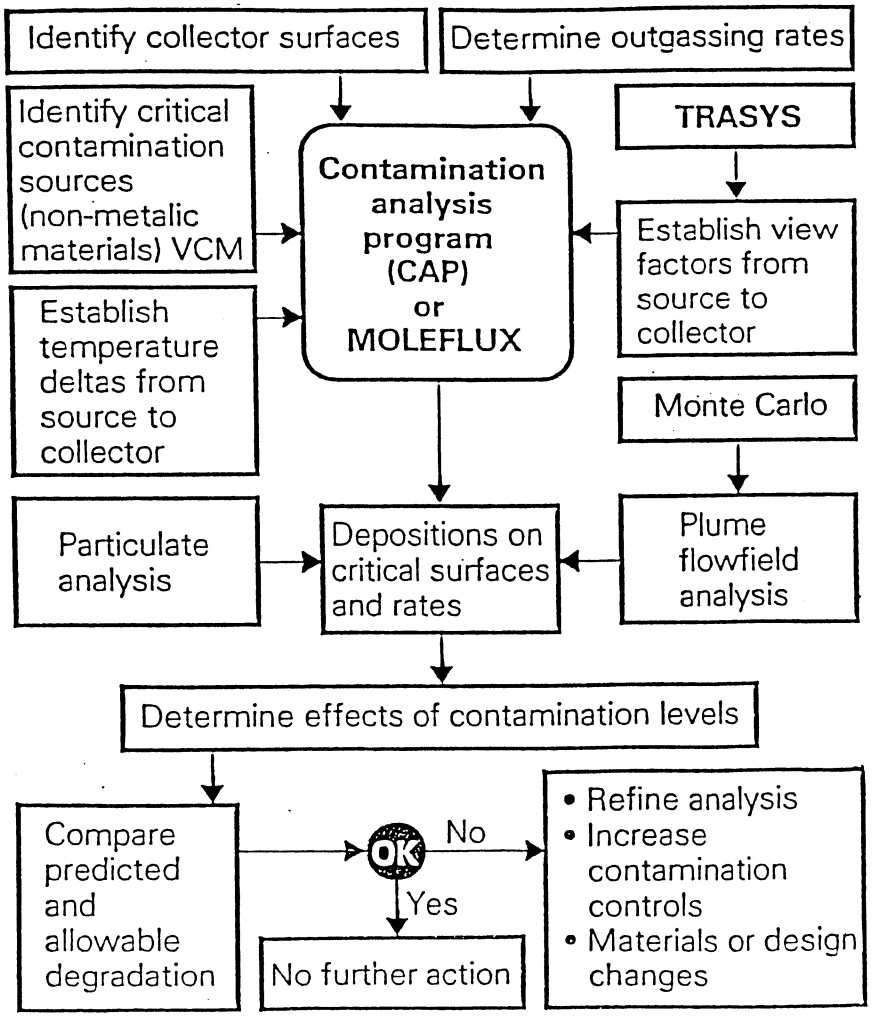


- Identify contamination sources
- Identify sensitive potential "collector" surfaces
- Perform Molecular Diffusion Analysis
- Perform Particulate Distribution Analysis (launch, on-orbit)
- Perform Plume Flowfield Analysis
- Conservative Assumptions
  - Materials were not pre-conditioned for analysis (i.e., no bake-outs, no thermal vacuum test exposure)
  - Analysis results were not reduced to consider that some materials are overcoated with others

# Contamination Sources – Molecular

- Ground operations – 100 Angstroms NVR (non-volatile residue)
- On orbit – Outgassing sources (Penzane lubricant not included here because the amount is insignificant compared to other sources)
- Thruster exhaust gases

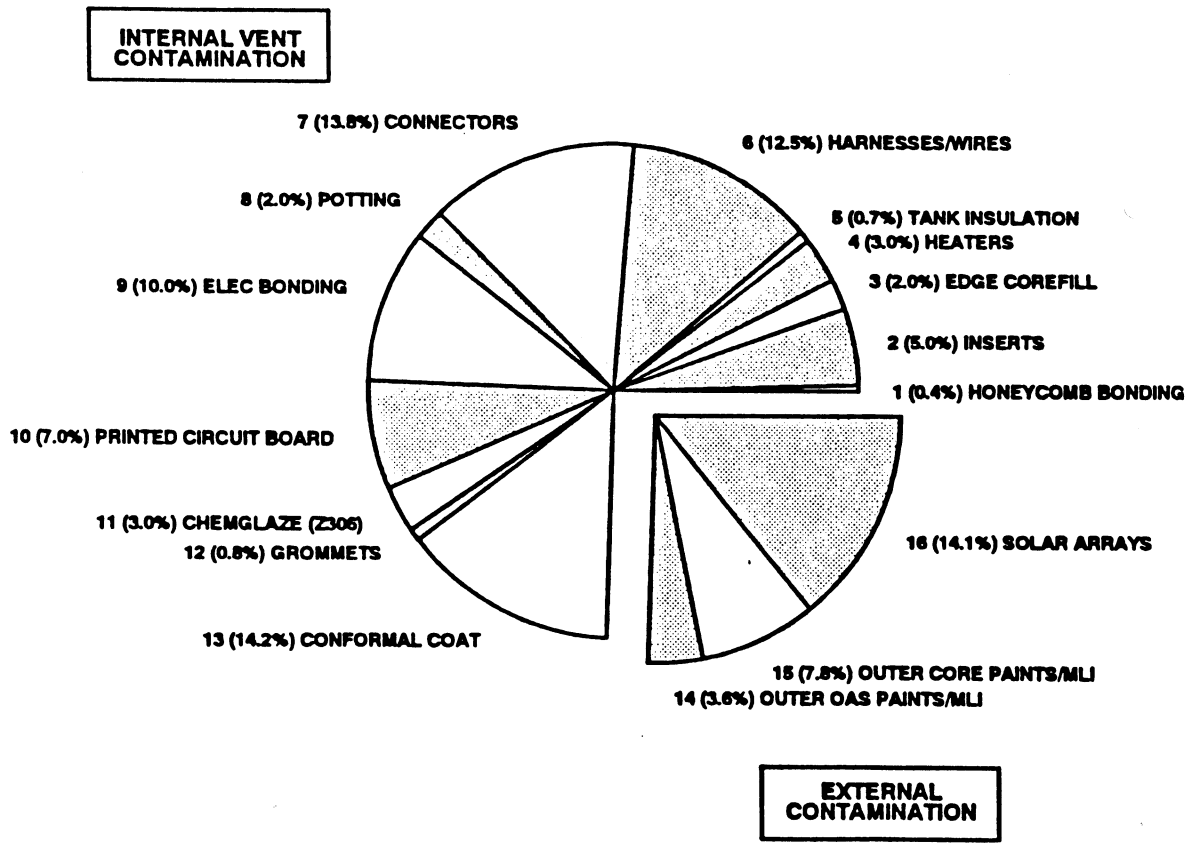

# Molecular Diffusion Analysis – Computer Model and Inputs

- Contamination Analysis Program (CAP)
  - Developed by J. M. Millard of JPL for GSFC
  - Analysis of mass transport in the free molecular flow environment

- Temperatures Sources and Collectors
  - Outgassing temperature for most sources 70°F
  - Solar arrays: model run twice, at 120°F (as a source) and 0°F (as a collector)
    - Included in the model: with solar arrays at 120°F, contamination outgassing from the spacecraft could "bounce" off the arrays onto the instrument or spacecraft body panels
  - OAS panels: modeled at 70°F as a source, 50°F as a collector
  - Core panels: modeled at 70°F as a source, 0°F as a collector
  - Scan wheel: 0°F (mirror), 20°F (lens) as collectors
  - Instrument radiator: modeled at 20°F as a collector
  - Instrument diffuser: modeled at 20°F as a collector

# Molecular Diffusion Analysis (Continued)

- Volatile Condensible Material Source - Electronics

| Location | Material | Weight (g) | % VCM | VCM (g) |
|---|---|---|---|---|
| **Interior Surfaces of Platforms** | | | | |
| Electronic boxes | Conformal coat, Solithane 113/300 (Nadir/central) | 2949.70 | 0.04(1) | 1.18 |
| | (OAS) | 194.86 | 0.04(1) | 0.27 |
| | Wire insulation (Tefzel or Kapton) (Nadir/central) | 842.77 | 0.03(1) | 0.25 |
| | (OAS) | 97.43 | 0.03(1) | 0.06 |
| | Magnetics, potting Hysol C15-015 (ES0092) (Nadir/central) | 421.38 | 0.04(2) | 0.17 |
| | (OAS) | 97.43 | 0.04(2) | 0.04 |
| | Bonding - EC2216 (Nadir/central) | 1685.54 | 0.05(1,2) | 0.84 |
| | (OAS) | 389.72 | 0.05(1,2) | 0.19 |
| | Printed circuit board (Nadir/central) | 6236.50 | 0.01(1,2) | 0.62 |
| | (OAS) | 1441.98 | 0.01(1,2) | 0.14 |
| | Connectors (Nadir/central) | 589.94 | 0.10 | 0.58 |
| | (OAS) | 136.40 | 0.10 | 0.14 |
| | Exterior Paint - Chemglaze Z306 (Nadir/central) | 193.00 | 0.10(1) | 0.19 |
| | (OAS) | 58.81 | 0.10(1) | 0.06 |
| Electronics box grommets | Silicone gasket (Nadir/central) | 99.9 | 0.07(1) | 0.07 |
| | (OAS) | 19.49 | | 0.01 |
| Scan wheel, reaction wheel (gyros hermetically sealed) | Penzane X-2000 plus 5% lead napthenate | 2 (est) | 0.21(4) | 0.004 |
| | Total without bake-out (OAS) | | | **1.83** |
| | (Nadir/Center) | | | **5.75** |
| | Total with electronics and harness bake-out (OAS) | | | **1.15** |
| | (Nadir/Center) | | | **3.21** |

**Notes:** (1) NASA JSC 08962; (2) TRW tested per ASTM 595; (3) NASA 1124; and (4) GSFC tested.

| Generic Electronic Boxes | |
|---|---|
| **Material** | **% by weight of box** |
| Aluminum | 40 |
| Printed Circuit Board | 14.8 |
| Components | 23 |
| Conformal Coating | 7 |
| Adhesive | 4 |
| Wiring | 2 |
| Connectors | 2.8 |
| Potting Material | 1 |
| Misc. Metallic Materials | 5 |
| Exterior Paint | 0.4 |

| Harnesses | |
|---|---|
| **Material** | **% by weight of harness** |
| Wire | 48 |
| Insulation | 32 |
| Connector Potting | 8 |
| Connector and Pins | 12 |

- VCM data for electronics based on "generic box" configuration
- Box weight percentages assigned for each type of material generally found in an electronics box
- Assumption has been validated by latest available data from subcontractors supplying electronics
- All surfaces modeled as having 100Å initial surface contamination

# Molecular Diffusion Analysis (Continued)

- View factors – calculated by thermal engineer using TRASYS II
- Outgassing rate constants - a multiplier CAP uses for remaining source outgassing VCM
  - Used outgassing data from two different sources:
    - -- "Characterization of Contamination Generation Characteristics of Satellite Materials", by P. Glassford
    - -- Used data from a paper on the"Wide Field Planetary Camera", by J. Barnegoltz and D. Taylor
  - Used outgassing data for the same materials or materials similar (i.e. same base polymer) to those used on spacecraft

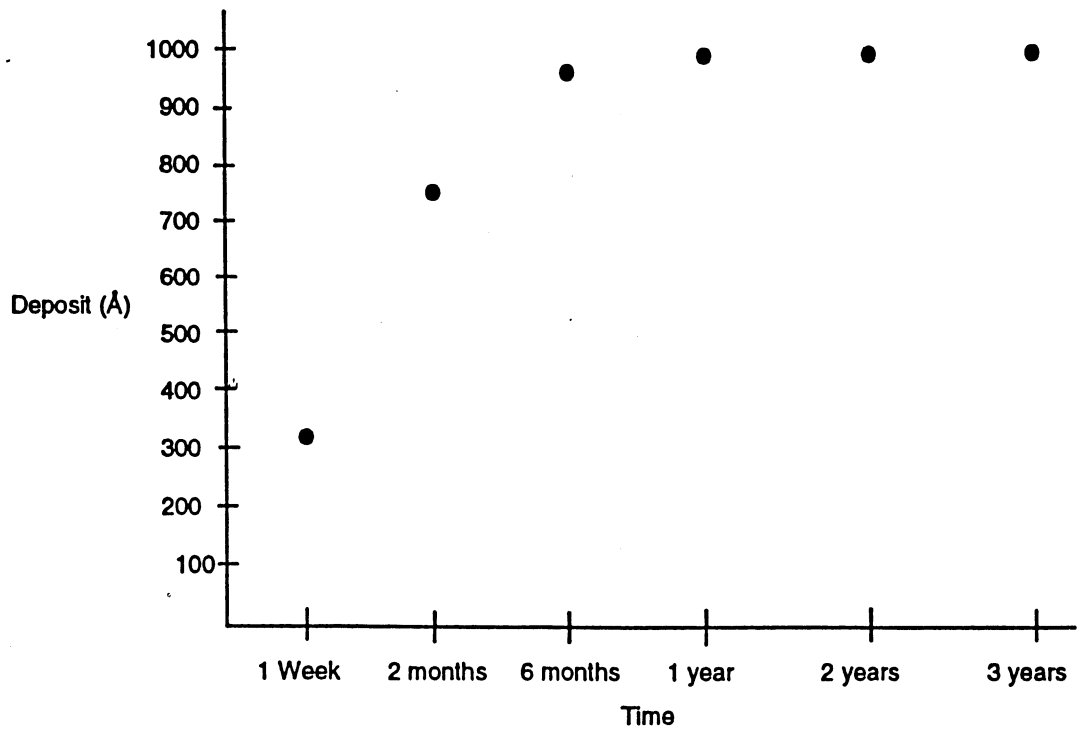


Instrument Radiator Molecular Build-Up (No. 11)

# Molecular Diffusion Analysis (Continued)

- Vent Paths

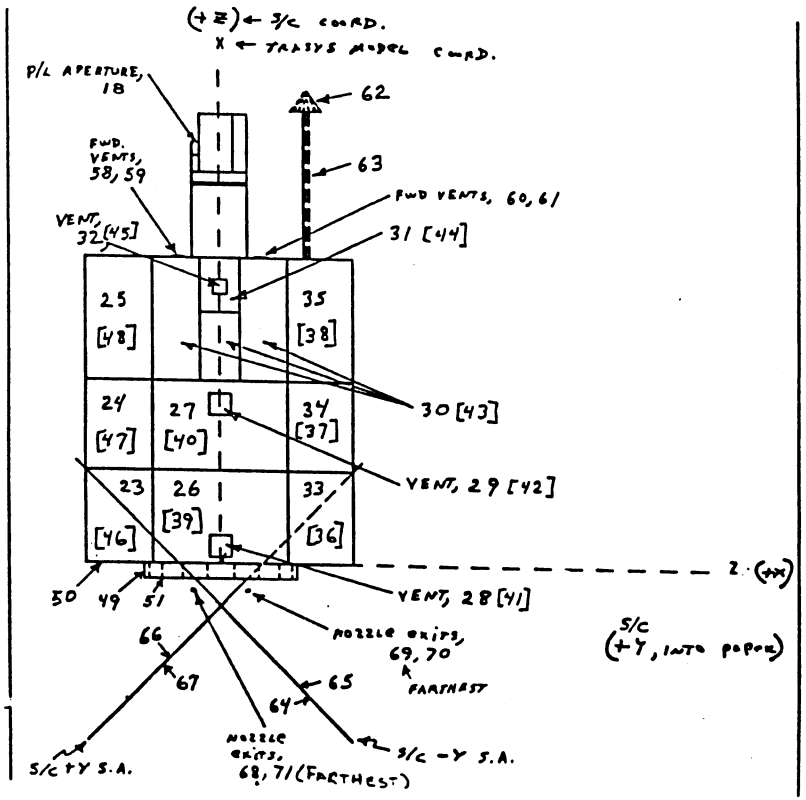


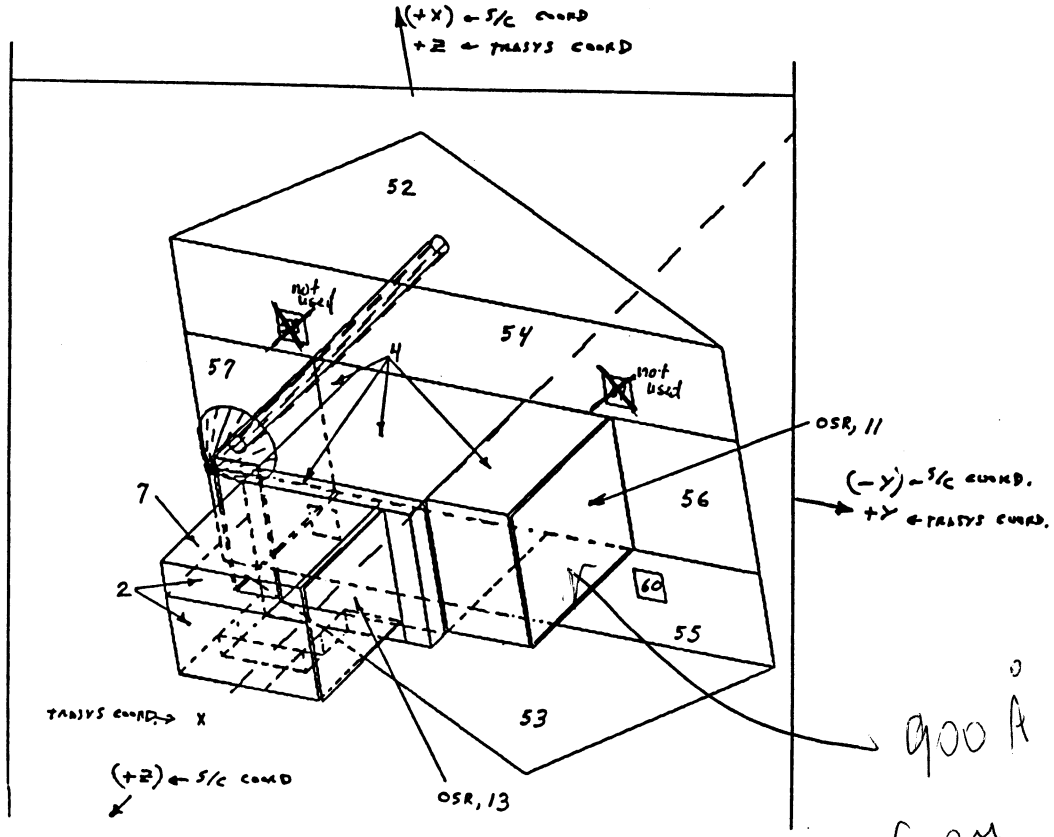


900 Å from 3" hole for interface cables

- Central platform electronics vented out 5 openings:
  - 5% out nadir electrical feed-through (node 60)
  - 23.75% out each of the scan wheel holes (nodes 32,45)
  - 23.75% out each of the central platform electrical feed-throughs (nodes 29,42)
- OAS platform vented out 5 openings
  - 15% out each of the OAS electrical feed-throughs (nodes 28,41 and 29,42)
  - 40% out the 10-inch hole in the bottom of the OAS module

# Molecular Diffusion Analysis (Continued)

TRW

## Summary of Results

what is impact??

| Surface | Deposition | Effect | Allowable Change Due to Contamination |
|---|---|---|---|
| Instrument Radiator (1 of 3) | 976Å | $\Delta\alpha_s$ 0.10 | TBD |
| Instrument MLI | 331Å | $\Delta\alpha_s$ 0.033 | TBD |
| Spacecraft Earth Sensor<br>Mirror<br>Lens | <br>2701Å<br>6146Å | Decrease in transmission by 10% | <20% (TBR) |
| Spacecraft Solar Arrays<br>Molecular outgassing<br>Plume contamination | <br>1112Å<br>100Å | 1% transmission and power loss | Included in performance uncertainty design factor |
| +X+Y OAS body panels | 109Å | $\Delta\alpha_s$ 0.01 | $\Delta\alpha_s$ 0.04 (aluminum tape)<br>$\Delta\alpha_s$ 0.05 (ZOT) |
| -Y,+Y OAS body panels | 360Å | $\Delta\alpha_s$ 0.036 | $\Delta\alpha_s$ 0.06 (leafing aluminum paint) |
| -X-Y OAS body panels | 119Å | $\Delta\alpha_s$ 0.012 | $\Delta\alpha_s$ 0.04 (aluminum tape)<br>$\Delta\alpha_s$ 0.05 (ZOT) |
| -Y,+Y core body panels | 339Å | $\Delta\alpha_s$ 0.034 | $\Delta\alpha_s$ 0.04 (aluminum tape)<br>$\Delta\alpha_s$ 0.05 (ZOT) |
| -X-Y and +X+Y core body panels | 128Å | $\Delta\alpha_s$ 0.013 | $\Delta\alpha_s$ 0.05 (ZOT) |
| Scan Wheel MLI | 262Å | $\Delta\alpha_s$ 0.026 | N/A |

Note: For surfaces with less than 100Å deposition, numbers were not reported
$\Delta$ 0.01 $\alpha_s$ for every 100Å

A.I.

976Å is not correct - TRW to redirect vent hole - TRW to give new number to be for $\Delta\alpha_s$.

# Particulate Distribution and Plume Flowfield Analysis

TRW

## Particulate Distribution

- Performed to analyze transfer of particulates to instrument
- Initial surface cleanliness levels of 850, 750, and 500 for the fairing, spacecraft, and instrument respectively
- Results indicate that nadir platform surface of the spacecraft is level 900, the vertical surfaces of the spacecraft are level 750, and the instrument is level 550 following the venting process
- This analysis does not include particulate contamination caused during fairing release
- Atomic oxygen effect is insignificant at the TOMS-EP orbital altitude

## Plume Flowfield Analysis

- Direct simulation Monte Carlo model used to compute plume flowfield during delta-V maneuvers
- Results indicate:
  - 10 Angstroms of aniline nitrate deposits onto the instrument and the front face (nadir) of spacecraft due to ambient scattering of plume molecules
  - Peak deposition of 2000Å, average of less than 100Å on one side and 50Å on the other due to direct impingement of plume on solar arrays

# Source and Effects Analysis Conclusions/ Recommendations

- Spacecraft self-contamination will not be significant enough to have detrimental effects on spacecraft performance

100 Å @ launch for entire Instm

- Largest depositions identified over three years:
  - Instrument radiator = 976Å (because instrument is near nadir vent)
    - -- If the thermal vacuum test is considered in the analysis this is reduced to 650Å
  - Spacecraft scan wheel (earth sensor) = 8950Å (because assembly is at large vent for central platform electronics)

- Venting from interior spacecraft electronics is largest source of contamination

- Recommendations
  - Hermetically sealed "plug" in 3-inch hole venting toward instrument or use MLI to redirect any outgassing that leaks past "plug" (reducing the contamination on the instrument radiator to almost nothing)
  - MLI should be used to selectively vent outgassing through scan wheel hole away from scan wheel optics
  - Bake-out all electronics

# TOMS-EP Contamination Control

| Open Issues | Approach to Resolution |
| --- | --- |
| 1) Pegasus fairing release contamination (particulates) | Fairing separation test conducted in June failed. Meet with GSFC for any useful contamination data. Fairing being re-designed to solve contamination and separation problems. |
| 2) Pegasus fairing outgassing contamination created during aerodynamic warming | Collect material and temperature data for fairing during ascent for quick analysis - pending resolution of item 1. |
| 3) Contamination contributed by frangibolt | Conduct testing in vacuum at simulated temperatures and configuration. Prebake silicone material or replace with low outgassing alternative. |
| 4) Pegasus fairing cleanliness and nitrogen purge and captive carry purge | Work with GSFC and OSC at Contamination Working Group meetings for resolution. |

# Materials and Processes

# Materials and Processes Overview

- TOMS-EP M&P issues are being worked during weekly PMPCBs and GSFC/TRW telecons

- TOMS-EP Materials and Processes (M&P) program being implemented in accordance with PAIP
  - Inorganic materials compliant with MSFC-SPEC-522B, Table I
  - Organic materials compliant with SP-R-0022A vacuum outgassing requirement. Total mass loss (TML) ≤ 1.0% and maximum collected volatile condensible material (CVCM) ≤ 0.1%. Noncompliant materials addressed by Material Usage Agreements (MUAs) and considered in Contamination Analysis

- All TOMS-EP Materials and Processes, TRW and subcontractors, are documented in Project Approved Materials and Processes List (PAMPL)
  - Updated PAMPL (Revision A) is released

- A total of 48 MUAs have been prepared and submitted for GSFC approval
  - Majority submitted because material does not meet outgassing requirement
  - MUAs not submitted for flammability per GSFC Flight Assurance Manager direction

# Materials and Processes Overview (Continued)

- Subcontractors are being reviewed for M&P compliance
  - Acceptability of design via drawings and documentation review
  - Materials compliance to TRW subcontractor PARs
  - Fabrication processes to NHB 5300.4 guidelines. Soldering to MIL-STD-2000A/NHB 5300.4(3A-1)/PR3-46
  - Processes certifications
  - SDRL approval, e.g. manufacturing (fabrication and inspection) plan, Materials and Processes List (MUAs)
  - Onsite audits of processes and flight hardware
  - Printed wire board (PWB) coupons inspection to MIL-P-55110 (GSFC)

- Copies of TRW's and subcontractors' processes documents have been forwarded to GSFC per request
  - Fabrication process procedures/specifications
  - Soldering training manuals
  - Soldering certifications

# Materials and Processes Overview (Continued)

- Subtier vendors reviewed and certified to TRW processes as appropriate, e.g. Ricmar Engineering to be certified by TRW for insert and bushing installation qualification of panels and platforms

- TRW drawings reviewed to date for compliance to PAMPL
  - 72 structure drawings, 62 reviewed, 40 approved
  - 39 propulsion drawings, 30 reviewed, 24 approved
  - 12 sun sensor drawings reviewed
  - 5 valve drive electronics drawings reviewed

- Wheel Bearing Lubricant: Pennzane SHF-2000 (formerly X2000) plus 5% Lead Napthenate
  - Very low vapor pressure at room temperature ($4 \times 10^{-12}$ Torr)
  - Outgassing tested by NASA/GSFC: TML = 2.51%, VCM = 0.21%
  - Outgassing included in Contamination Sources and Effects Analysis
  - MUA submitted

# Materials and Processes Requirements Versus Capabilities

Source: D19086, TOMS-EP PAIP

| Paragraph/Requirement | Capability | Verification |
|---|---|---|
| 6.2.1, Compliant Materials Conventional Application, meet selection criteria | Meet SP-R-0022A criteria, listed in TOMS-EP PAMPL D19079. All noncompliant materials will be addressed by MUA | Analysis, Drawing Review |
| 6.2.5.1, Flammability and Toxic Offgassing NHB 8060.1. WSMCR 127-1, paragraph 3.10.2 | Materials properties identified in TOMS-EP PAMPL D19079 | Analysis, Test |
| 6.2.5.2, Vacuum Outgassing SP-R-0022A TML ≤ 1.0%, VCM ≤ 0.1% | Selected materials listed in TOMS-EP PAMPL D19079. Noncompliant materials will be addressed by MUA | Analysis, Test |
| 6.2.5.3, Shelf Life Control of Material | TRW shelf life control document D01443 | Inspection, Test |
| 6.2.6, Inorganic Materials MSFC-SPEC-522B, Table 1 | Metals selected per 522B, Table 1 | Drawing Review |

# Materials and Processes Requirements Versus Capabilities

Source: D19086, TOMS-EP PAIP

| Paragraph/Requirement | Capability | Verification |
|---|---|---|
| 6.2.6.1, Fasteners GSFC S-313-100 | TRW standard quality assurance requirements for procured items, D04740 | Inspection, Test |
| 6.3, Processes Selection. Qualified Processes, Material Integrity | Processes selected from TOMS-EP PAMPL, D19079 | Analysis, Drawing Review, Specifications Review |
| 6.3.1, Welding and Brazing Approved Procedures, Qualified Operators | Processes selected from TOMS-EP PAMPL, D19079 | Drawing Review, Inspection, Specifications Review |

# Material Usage Agreements Status

| Source | MUAs (1) Submitted | Date Submitted | Open | Submittal Status Rejected | Submittal Status Approved |
|---|---|---|---|---|---|
| Ithaco | 9 | 4-17-92 | 9 | 0 | 0 |
| Loral | 15 | 6-12-92 | 14 | 0 | 1 |
| Sage | 0 | | | | |
| Gulton | 4 | 6-23-92 | 4 | 0 | 0 |
| Kearfott | 17 | 4-30-92 (6)<br>6-11-92 (8)<br>6-23-92 (3) | 17 | 0 | 0 |
| Pyronetics | 1 | 5-15-92 | 1 | 0 | 0 |
| Statham | 1 | 5-15-92 | 0 | 0 | 0 |
| TRW | 1 | 4-14-92 | 0 | 0 | 1 |

(1) MUAs submitted to GSFC as CDRL PA-11.

# Overview Comparison of NHB 5300.4(3A-1), MIL-STD-2000 and MIL-STD-2000A

| Requirement | NHB 5300.4 | MIL-STD-2000 | MIL-STD-2000A |
|---|---|---|---|
| Lead/wire Deformation | None | Open | 10% maximum |
| Insulation Deformation | None | None | 20% maximum |
| Broken Strands Permissible | No | Yes (Up to 6) | No |
| Nicks, Cuts, Scrapes | No | Yes | Yes (<10%) |
| Parts Mounting | Parallel and in contact | Approx. parallel <0.015 inches spacing | Approx parallel <0.025 inches spacing |
| Surface Mount | 3-5.5 (W or D)/Foot | 1W or 2D/Foot | 1W or 2D/Foot |
| Overhang | None permitted | 25% side (flat)<br>Toe (25% W or D) | 25% side (flat)<br>Toe (within EI limits) |
| Heel Fillet | No mention | Required | Required |
| Stress Relief | Soft requirement | 1D to 0.030" | 1D minimum |
| Solder in Stress Relief | Not permitted | Allowed within limits | Allowed within limits |

W = width, D = Diameter

# Overview Comparison of NHB 5300.4(3A-1), MIL-STD-2000 and MIL-STD-2000A (Continued)

| Requirement | NHB 5300.4 | MIL-STD-2000 | MIL-STD-2000A |
|---|---|---|---|
| Lead End Base Metal Exposure | Not permitted | Not permitted | Permitted |
| Chip Devices | Not addressed | Covered | Covered |
| Visual Appearance | Perfect | 5% cosmetic defects | 10% cosmetic defects |
| Turret Terminal | 180° to 270°<br>28 awg 180° to 360° | 180° to 270° | 180° - no overlap for all except rectangular |
| Hook Terminal | 180° to 270° | 180° to 270° | |
| Pierced Terminal | 90° to 270° | 180° to 270° | |
| 2-Sided Boards | Wire in all holes | No requirement | No requirement |
| Plated through Holes | Filled with solder | 25% solder Rec. | 25% solder Rec. |
| Hand Soldered Boards' Vias | Filled with solder | No solder required | No solder required |
| Solder Contamination | Gold and Copper only | All elements permits dumping | All elements permits dumping |

All other differences are minor

# EEE Parts Program

# TOMS-EP EEE Parts Program

- EEE Parts
- Project Material Surveillance Plan
- Field Programmable Gate Array (FPGA) Qualification

# EEE Parts Overview

TRW

- TOMS-EP EEE parts program implementation
  - GSFC, TRW, and subcontractors team effort
  - In accordance with modified Section 5 of GSFC PAR, GSFC-450-006, (GPAR)
  - Fly quality parts
  - Special attention to GIDEP alerts

- NSPAR and parts procurement issues have been and are being worked during weekly GSFC/TRW telecons, on-going telephone conversations with GSFC parts branch personnel, and TRW-PMPCBs.

- Implementation of modified Section 5 of GPAR reduced total NSPARs from 252 to 157. Modified Section 5 also required nonstandard parts QCI data be submitted to GSFC

- Subcontractors are being reviewed for compliance
  - EEE Parts Control Plan
  - Parts Identification List including NSPARs
  - DPA Procedures
  - TRW Parts Audits

- TOMS-EP PAPL includes all subcontractors and TRW EEE Parts Lists. Updated PAPL released 17 July 1992

# EEE Parts
# Summary of Requirements Versus Compliance

| PAR Requirement | Compliance |
|---|---|
| Original PAR classified a Grade 2, or better, part per PPL-19 as standard. All other parts classified as nonstandard including hybrids. QCI data with NSPAR not specified. | Identified 252 parts as nonstandard, requiring a NSPAR for GSFC approval. |
| Modified PAR expanded the definition of a standard part to be selected in order of preference:<br>1. Grade 2 or better per PPL-19<br>2. All JAN microcircuits, JANTX/TXV semiconductors, and ER passive parts.<br>3. Microcircuit procedures on a DESC certified QPL line with deliverable lot related QCI data.<br>4. Same as 3 except acceptable generic QCI data | Identified 95 parts (39%) that were reclassified as standard. |
| All other parts classified as nonstandard requiring NSPAR and established reliability (ER) | Remaining 157 parts require a NSPAR for GSFC approval |
| QCI data to be delivered to GSFC with the NSPAR. | QCI data is being supplied with the NSPAR |

# EEE Parts
# Summary of Requirements Versus Compliance (Continued)

| PAR Requirement | Compliance |
|---|---|
| Derating per 5.2.3 using PPL-19 | Derating per PPL-19/MIL-STD-975 and/or D02700. |
| Radiation hardness per 5.2.4 includes | Component internal dose rate 14 krads (Si) for 60 mil aluminum wall with 100 mil base plate for 2-year duration |
| Screening verification per 5.2.5 for all JANTX/TXV semiconductors | All JANTX/TXV semiconductors will be rescreened. Some Loral parts from stock will require a waiver. |
| DPA per GSFC S-311-M-70 on a sample of each Lot Date Code for microcircuits, hybrids, semiconductors, nonstandard relays and crystal oscillators | DPA is performed per TRW DPA procedure M273876R |
| Parts Identification List (PIL) per 5.3 | TRW PAPL D19078 includes all requirements specified. All subcontractor parts lists are being incorporated. PAPL will include a sort by subcontractor |

# NSPAR Status

TRW

## NSPAR Status

7/27/92

| SUBCONTRACTOR/TRW STATUS | LORAL | ITHACO | KEARFOTT | GULTON | TRW | TOTAL |
|---|---|---|---|---|---|---|
| TOTAL NSPARS SUBMITTED BY SUB | 58 | 49 | 80 | 37 | 28 | 252 |
| - WITHDRAWN | 2 | 4 | 5 | 14 | 0 | 25 |
| - SUPPLIED BY GSFC OR TRW | 0 | 1 | 0 | 0 | 0 | 1 |
| TOTAL NSPAR PRIOR TO MODIFIED PAR | 56 | 44 | 75 | 23 | 28 | 226 |
| - STANDARD PARTS PER MODIFIED PAR | 3 | 23 | 27 | 16 | 0 | 69 |
| TOTAL MODIFIED PAR NSPARS | 53 | 21 | 48 | 7 | 28 | 157 |
| APPROVED BY TRW | 36 | 13 | 16 | 6 | 13 | 84 |
| APPROVAL PENDING RECEIPT OF QCI DATA | 0 | 2 | 11 | 0 | 0 | 13 |
| INPROCESS AT TRW | 7 | 2 | 6 | 1 | 15 | 31 |
| RETURNED TO SUB FOR REVISION | 10 | 4 | 15 | 0 | 0 | 29 |

| GSFC / TRW STATUS | LORAL | ITHACO | KEARFOTT | GULTON | TRW | TOTAL |
|---|---|---|---|---|---|---|
| MODIFIED PAR NSPARS SUBMITTED TO GSFC * | 52 | 15 | 49 | 7 | 20 | 143 |
| APPROVED BY GSFC* | 21 | 0 | 10 | 0 | 7 | 38 |
| REJECTED BY GSFC | 18 | 0 | 28 | 0 | 13 | 59 |
| WAIVERS SUBMITTED | 0 | 0 | 0 | 0 | 0 | 0 |
| WAIVERS APPROVED | 0 | 0 | 0 | 0 | 0 | 0 |
| INPROCESS AT GSFC | 13 | 15 | 11 | 7 | 0 | 46 |

* Excluding Standard Parts Per the Modifed PAR.

# EEE Parts
# GSFC Rejected NSPARs Under Review

| Basis of Rejection | Loral | Ithaco | Kearfott | Gulton | TRW | Total |
|---|---|---|---|---|---|---|
| Inadequate information (e.g., specification modification, etc.) | 5 | 0 | 19 | 0 | 7 | 31 |
| Inadequate or no QCI data available | 11 | 0 | 0 | 0 | 6 | 17 |
| Not space qualified part (e.g., failed PDA, nonhermetic package, etc.) | 2 | 0 | 9 | 0 | 0 | 11 |
| **Total** | 18 | 0 | 28 | 0 | 13 | 59 |

# EEE Parts
# TRW Closeout Plan for Rejected NSPARs

- Evaluate basis for each rejection
  - Supply additional information requested, e.g. updated specification, missing document, etc.
  - Where applicable, confirm that missing QCI data will be supplied and the expected due date
  - Where data is not available, assess alternatives
    (1) Determine that the quality of the part is acceptable without data; request waiver
    (2) Conduct tests to acquire data
    (3) Change out part

  - Where data shows lot test data exceeds specified rates
    (1) Assess degree to which specified rates are exceeded. If acceptable, request waiver.
    (2) Change out part

- Request waivers

# Project Material Surveillance Plan

TRW

## Objective

To ensure all piece parts required by each vendor and by TRW support manufacturing schedules in a timely manner with approved parts using TRW and GSFC parts resources

## Plan

- Review each vendors bill of material and procurement plan
- Follow-up with weekly telecons to review material delivery status
- Publish schedule critical parts reports monthly
- Furnish TRW inventory material when available and applicable
- Review procurement status of schedule critical EEE parts with GSFC during weekly telecons
- Solicit GSFC assistance in procuring schedule critical EEE parts as needed
- Visit or interface with subtier vendors to assist/expedite delivery
- Coordinate consolidated procurements for units being built at TRW

# Parts Being Supplied by GSFC

TRW

## VDE Unit (TRW)

| Part Number | Quantity | Expected Delivery (1) | Part Number | Quantity | Expected Delivery |
|---|---|---|---|---|---|
| 54HCS00 | 15 | 9-15-92 | 54HCS02 | 5 | 9-15-92 |
| 54HCS32 | 8 | 9-15-92 | 54HCS04 | 7 | 9-15-92 |
| 54HCS74 | 15 | 9-15-92 | 54HCS08 | 7 | 9-15-92 |
| 54HCS244 | 12 | 9-15-92 | 54HCS138 | 7 | 9-15-92 |
| HS181C55RH8 | 9 | 9-15-92 | 54HCS14 | 5 | 9-15-92 |
| HS180C85RH | 5 | 9-15-92 | 54HCS161 | 15 | 9-15-92 |
| HM6617883 | 5 | 9-15-92 | 54HCS374 | 5 | 9-15-92 |

## Gulton

| Part Number | Quantity | Expected Delivery |
|---|---|---|
| HS1-80C86RH-Q | 12 | 8-15-92 |
| HS1-1840RH-8 | 54 | 8-15-92 |
| HS1-82C545RH-Q | 12 | 8-15-92 |
| HS1-82C37ARH-Q | 12 | 8-15-92 |

## Ithaco

| Part Number | Quantity | Expected Delivery |
|---|---|---|
| 1R7130 | 24 | 7-20-92 |
| IRC | | |

**Notes:** All parts completely tested/screened and DPA by GSFC
(1) Date change from 8-15-92 to 9-15-92

# Field Programmable Gate Array Program

# Implementation and Basis of Implementation TOMS-EP Field Programmable Gate Array (FPGA) Program

- TOMS-EP subcontractors use Actel FPGAs to:
  - Reduce design and qualification costs
  - Reduce board space and weight

- TRW Evaluation of Actel FPGA
  - Complete evaluation conducted for TRW Universal Test Bed (UTB) Project
    - 3,700 hour accelerated life test
    - DPAs including cross section and current density calculations
    - Radiation testing
  - Collected data from JPL, Hughes, John Hopkins, and Aerospace Corp. on all versions of FPGAs from Actel
  - Part of a industry team (JPL, Hughes, Aerospace, and TRW) to evaluate Actel 1280 FPGA

# NASA/GSFC Evaluation of FPGA for TOMS-EP

- GSFC parts branch personnel visited TRW for
  - Technical discussion of Actel's FPGA and "Antifuse" technology
  - Evaluation of TRW's FPGA design, programming, evaluation equipment and test data
  - Review of TRW's life test capabilities

- GSFC parts branch and TRW visited Actel for
  - Technical discussions of wafer processing, assembly and test
  - Discussions regarding programming reliability and Class B and S testing of unprogrammed FPGAs

- GSFC and TRW have agreed that
  - Actel's "antifuse" technology is a permanent, nonreversible mechanism for creating logic patterns in the FPGA
  - Post programming burn-in is not required. Dynamic burn-in of unprogrammed FPGAs stresses all logic cells and is more through than post programming burn-in
  - Samples programmed at the same time as the flight units with Alpha 91 test circuit will qualify the FPGA lot and the programming station
  - The technology is relatively new and requires continuous monitoring until substantial data is collected

- GSFC has approved TRW/Gulton FPGA NSPARs

# TOMS-EP Approach for Purchase and Qualification of FPGAs

- Purchase one lot for use by all subcontractors
  - Lower qualification costs
  - Lower purchase price
- TRW to perform Destructive Physical Analysis (DPA)
- TRW to perform Life Test (1000 hours dynamic burn-in at 125°C)
  - Stage 1: TRW program 22 units followed by burn-in
  - Stage 2: Subcontractors program 22 units before and after flight units followed by burn-in by TRW
- TRW to audit subcontractor's FPGA capabilities and controls (complete)
- Calibrate programming system for flight units programming
- TRW to compile, analyze, and publish lot qualification report
- TRW/Gulton to submit NSPARs for FPGA

# FPGA Qualification Schedule for TOMS-EP Project

| Task Description | Start Date | Finish Date |
|---|---|---|
| Life Test (TRW) | | |
| Program Life Test Units | 5/15/92 | 5/16/92 |
| Perform Life Test | 5/30/92 | 7/14/92 |
| FPGS DPA (Lot Qualification) | 5/27/92 | 6/10/92 |
| Ithaco | | |
| Survey FPGA Station and Procedures | 5/18/92 | 5/19/92 |
| Convert Pinout – PGA to flat pack | 5/25/92 | 5/26/92 |
| Program FPGAs for ETB (first half) | 6/14/92 | 6/15/92 |
| Incorporate New Designs (3 each) | 7/7/92 | 7/8/92 |
| Program Balance of ETB FPGAs | 7/7/92 | 7/7/92 |
| Ship PWBs with FPGAs to Ithaco (ETB) | 7/23/92 | 7/27/92 |
| Program TOMS FPGAs | 8/17/92 | 8/18/92 |
| Test "Ithaco" Life Test Units | 8/18/92 | 8/19/92 |
| Ship PWBs with FPGAs to Ithaco | 8/20/92 | 8/21/92 |
| Coordinate and Resolve FPGA Issues | 5/19/92 | 9/4/92 |
| Kearfott | | |
| Survey FPGA Station and Procedures | 5/20/92 | 5/21/92 |
| Program FPGA (Kearfott) | 6/29/92 | 7/2/92 |
| Test Kearfott Life Test Units | 7/8/92 | 7/10/92 |
| Monitor FPGA Programming and Testing | 5/21/92 | 7/10/92 |
| Gulton | | |
| Survey FPGA Station and Procedures | 6/23/92 | 6/24/92 |
| Program FPGA (27 designs) | 10/5/92 | 11/2/92 |
| Test Gulton Life Test Units | 10/5/92 | 11/4/92 |
| Monitor FPGA Programming and Testing | 6/8/92 | 11/9/92 |
| Life Test (subcontractor) | | |
| Perform Accelerated Life Test | 11/6/92 | 12/21/92 |
| | | |
| Correlate & Analyze TRW & Subcontractor Life Test Results | 7/23/92 | 12/23/92 |
| Publish FPGA Qualification Report | 12/14/92 | 12/23/92 |

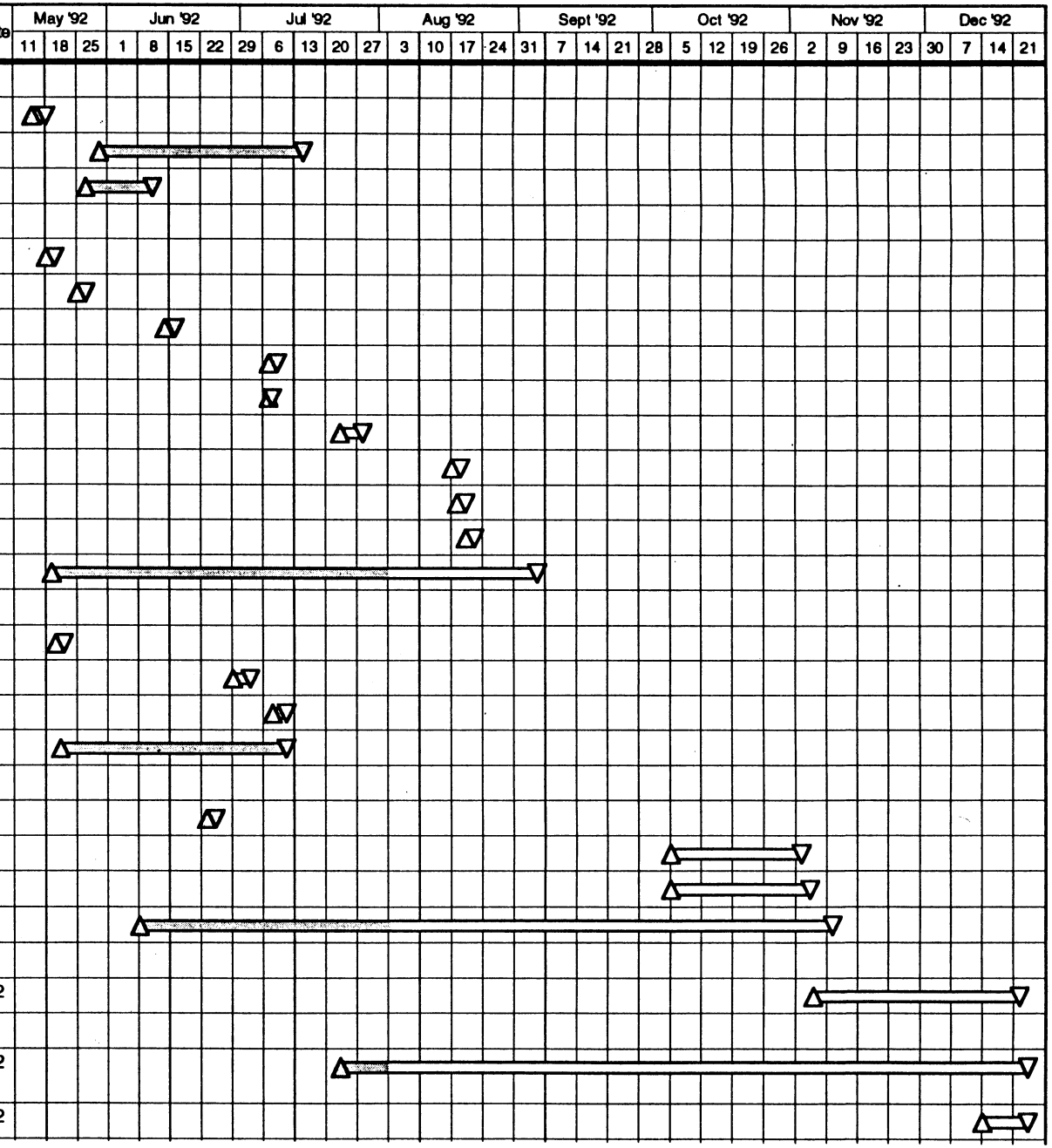

# Quality Assurance

# Quality Assurance Implementation

- Hardware quality assurance (QA) requirements and implementation plans contained in PAIP

- TRW QA program being implemented in accordance with TRW company manuals, and TOMS-EP project plans

**Manuals**
- Hardware Quality Assurance Manual
- Software Quality Assurance Manual
- Quality Directives
- Measurement Assurance Manual
- Configuration Management Manual

**TOMS-EP Plans**
- ESD Control Plan
- Contamination Control Plan
- Configuration Management Plan
- Manufacturing (Fabrication and Inspection) Plan
- Software Management Plan

- TRW's QA system complies with NHB 5300.4(1B)

- Project specific requirements are flowed down via quality project requirements (QPR) documents to performing organizations within TRW, e.g. procurement document review, receiving inspection requirements,mandatory government inspection points, etc.

- Subcontractor QA requirements are contained in TRW subcontractor PARs and TRW quality (Q) clauses
  - NHB 5300.4(1B) QA program required of subcontractors supplying components containing EEE parts, PAR 700-394
  - NHB 5300.4(1C) QA program required of subcontractors supplying mechanical devices and assemblies, PAR 700-398

# Quality Assurance Implementation (Continued)

- Quality assurance provisions are specified in subsystem and equipment (EQ) specifications
- Established interface with resident NASA representative
- TRW source QA for must subcontractors is being implemented through audits versus TRW resident QA. If audits indicate the need, TRW source inspection is implemented as required.
- Dedicated TRW source QA surveillance is being implemented at Luna Defense Systems Inc.

# Quality Assurance Requirements Versus Compliance/Implementation

| Requirement | Compliance | Implementation |
|---|---|---|
| **GPAR GSFC-450-006:** | | |
| 8.1 General | HQAM 0.0 | PAIP 1.0 |
| 8.2 Organization | HQAM 1.1 | PAIP 1.1.3 |
| 8.3 Configuration Control and Verification | CMM 1.0, 4.4 | Configuration Management Plan, D19084 |
| 8.4 Identification and Traceability | CMM 1.0 | Configuration Management Plan, D19084 |
| 8.5 Procurement Requirements | HQAM 3.0 | PAR 700-394, PAR 700-398 |
| 8.5.1 Contractor Source Inspection | HQAM 3.0 | PAIP 8.5.1 |
| 8.5.2 Procurement Review by the Government | HQAM 3.0 | PAIP 8.5.2, PAR 700-394 (para 8.5.2), PAR 700-398, (para 8.5.2) |
| 8.6 Contractor Receiving Inspection | QD.P783,0012 AD2-016 | Receiving Inspection QPR, QPR 11540 |
| 8.8 Contamination Control | HQAM 5.5 | Contamination Control Plan, D19082 |
| 8.9 Electrostatic Discharge Control | HQAM 5.4 | Electrostatic Discharge Control Plan, D19094 |

# Quality Assurance Requirements Versus Compliance/Implementation (Continued)

| Requirement | Compliance | Implementation |
|---|---|---|
| **GPAR GSFC-450-006:** | | |
| 8.10 Nonconformance Control | HQAM 9.5 | QD.P783.0002 |
| 8.10.1 Control, Disposition and Reporting of Discrepancies | HQAM 9.5 | QD.P783.0001 |
| 8.10.2 Failure Reporting | HQAM 4.8 | PAIP, 8.10.2 |
| 8.12 Inspection and Tests | HQAM 4.0 | QD.P783.0001 |
| 8.12.2 Inspection and Test Reports | HQAM 7.1 | PAIP 8.12.5 |
| 8.12.4 Inspection and Test of Stored Stock Hardware | Property Manual 6.01 | PAIP 8.17 |
| 8.12.5 QA Activities during the Integration and Test Phase | HQAM 4.0 | PAIP 8.12.4 |
| 8.12.6 Records of Inspection and Test | HQAM 7.1 | PAIP 8.12.5 |
| 8.15 Stamp Control | HQAM 8.1 | PAIP 8.15 |
| 8.16 Handling, Stage, Preservation Marking, Labeling, Packaging, Packing and Shipping | HQAM 12.1 | Transportation and Handling Plan, D19088 |
| 8.17 Government Property Control | Property Manual | Control of Government Furnished Property Plan, D19090 |
| 8.18. Government Acceptance | HQAM 4.9 | PAIP 8.18 |

# Quality Assurance Status

- Several QPRs have been generated to flowdown quality requirements within TRW
- MRB authorization issued to six subcontractors
- Subcontractor manufacturing flow plans reviewed. Mandatory inspection points established
- TRW MRB list generated
- Surveys of subcontractors conducted to verify compliance to NHB standards. Subcontractors placed in TRW Quality Assurance Suppliers Directory (QASD) upon satisfactory close out of survey
- A number of subcontractor audits have been conducted and closed to date

# Subcontractor Audit Schedule for TOMS-EP Project

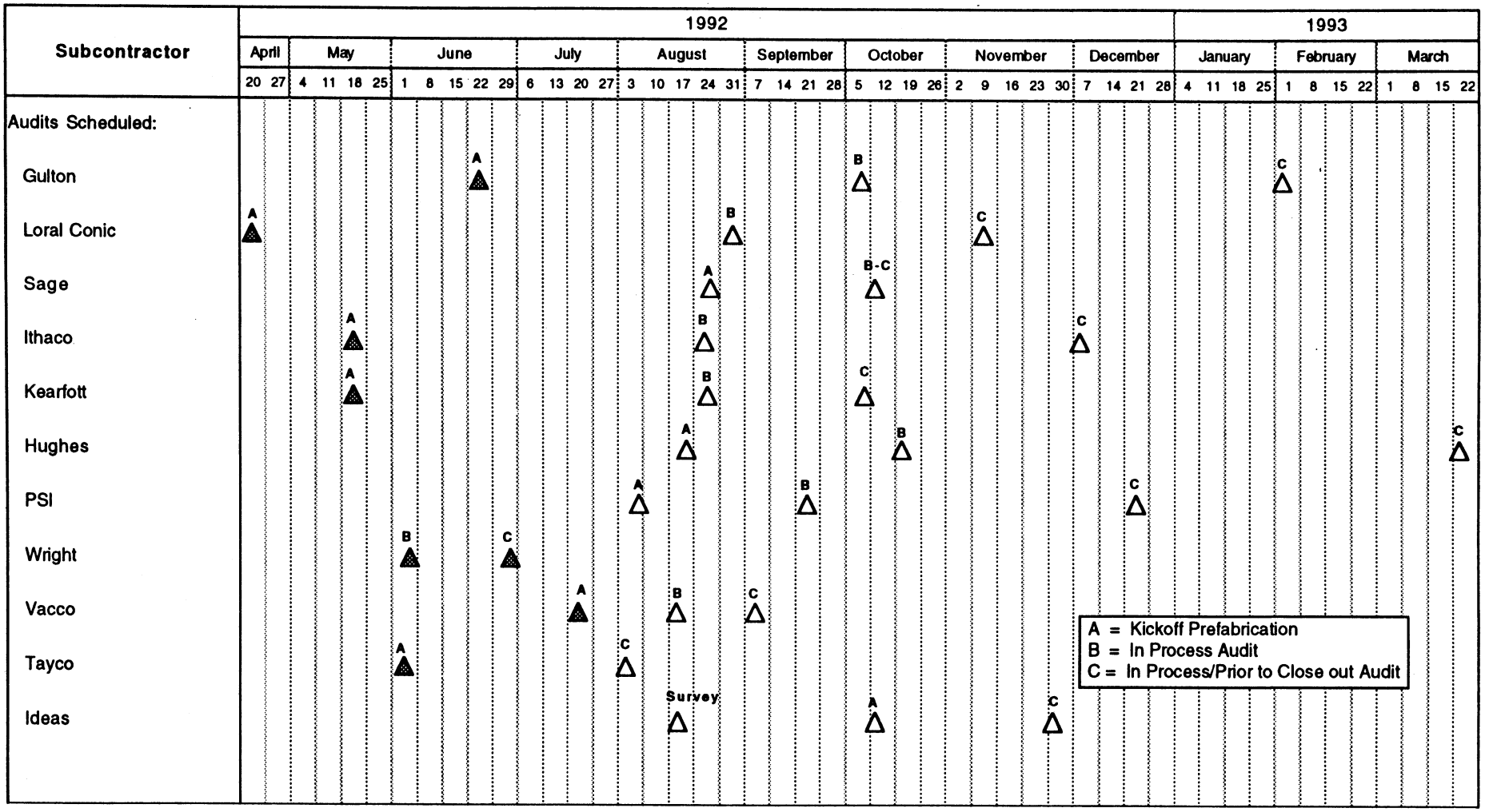

# TRW Subcontractor Audit Approach

- Three basic audits are planned at most subcontractor's facilities
  - PA requirements flow down (kickoff prefabrication)
  - In process fabrication
  - In process test prior to closeout
- All audits performed to prepared checklists designed to assure subcontractor compliance to PAR document requirements
  - Checklist multidisciplined. Includes QA disciplines, PM&P control, software control, etc.
  - Checklists forwarded to subcontractor at least a week in advance of audit
- Audit team consists of specialists, including quality engineer, parts engineer, M&P engineer, FPGA parts engineer, responsible design engineer, etc.
- Audits are successful in identifying systemic issues
- Currently 30 audits are scheduled at 11 subcontractors, 7 audits completed to date of which 5 closed
- Similarly, software audits are being implemented at Colorado Springs. Two audits completed to date.

# Quality Assurance Involvement in Subcontractor Activities (RFP to Delivery)

- **Award Process**
  - Quality assurance requirements generated for subcontractor PAR documents
  - TRW "Q" clauses identified for each subcontract
  - Statements of work reviewed
  - Proposals evaluated during source selection process
  - QA surveys conducted as required to NHB 5300.4(1B) or (1C)
  - Purchase orders reviewed and stamped by quality engineer
- **Manufacturing Process**
  - Subcontractor deliverables reviewed and approved
  - Subcontractor fabrication and inspection flow reviewed and approved for TRW and GSFC mandatory inspection points
  - Issue Type II material review board authorization upon GSFC approval
  - Process Supplier Information Requests (STR) for discrepancies
  - Lead the conduct of TRW audits at subcontractor facilities and source inspection
- **Test and Delivery**
  - Lead the conduct of TRW audits at subcontractor facilities and source inspection
  - Participate in failure reporting
  - Perform final source inspection
  - Review end item data package for acceptance

# TRW Quality Engineering at Luna Defense Systems Inc.

- Dedicated TRW source QA surveillance is being implemented at Luna Defense Systems Inc.
  - TRW and LDSI team effort

- Structural Test Model (STM) is the pathfinder for TOMS-EP
  - Developing and validating manufacturing and assembly process with STM
  - Full configuration control being implemented
  - Full TRW inspection of piece parts and assembly being implemented
  - Full documentation, e.g. STM material configurations, process certifications, and traceability

- STM will be to flight quality standards

- TOMS-EP flight structure will have
  - Configuration control to TRW standards
  - Total TRW source inspection of piece parts and assembly
  - Full documentation, e.g. material certifications, process certifications and traceability

# Software Quality Assurance and Configuration Management

# Configuration Management

- Internal design requirements baseline established following PDR: ICDs, system specification, MDI/EDI specifications, and system description document placed under formal CCB control
- 18 CCBs conducted during this phase
- Configuration management requirements flowed to subcontractors via PAR documents; all subcontractor CM plans reviewed and approved
- Allocated baseline will be established following CDR; changes to all specifications and ICDs will be processed through the CCB
- Specification Tree (CDRL SE-05) updated
- Configured Articles Lists (CDRL PA-22) updated

# Software Quality Assurance and Configuration Management Requirements Versus Compliance

| Requirements | Compliance | Implementation |
|---|---|---|
| **GPAR** | | |
| 10.3.1 Software Standards for QA | PAIP 10.3, TRW Software QA Manual (SQAM) | |
| 10.3.2 Assurance Function for for Verifying Standards | SQAM 3.0<br>SQAM 5.0 | Conduct reviews and audits<br>Perform test surveillance |
| 10.4 Establish a Software Configuration Management Process | TRW Configuration Management Manual (CMM) 100.2, 102.2, 102.5, 102.6, 103.2, and 103.5 | Apply CM levels of control; perform computer program identification and control |
| 10.5 Software Nonconformance Reporting and Corrective Action Process | SQAM 5.0 | Perform software problem reporting, analysis, and support corrective action |

# Software Assurance Implementation

- Review and approve the following documents
  - Software Management Plan
  - Software Requirements Specification
  - Software Standards and Procedures Document
  - Flight Software Verification Test Plans, Procedures, and Reports
- Review and audit software development folders
- Attend and participate in Software PDA, PDR, CDA, CDR, PMRS, and design walkthroughs
- Audit software being developed by Colorado Springs Engineering Operations (CSEO)
- Develop a software problem reporting system
- Monitor flight software functional tests
- Witness flight software verification tests

# Software Assurance Implementation (Continued)

- Review and approve software problem reports
- Participate in the software CCB process and test review boards
- Implement software quality metrics
  - Requirements stability, initiated at SRS baseline
  - Software problem reports, initiated at software integration test
  - Lines of code change, initiated at flight software verification test

# Software Assurance Status/Accomplishments

- Continuous interaction with TRW software developers and GSFC software assurance representative
- Reviewed and approved project software documents
  - Software Management Plan
  - Interim versions of the Software Requirements Specification
  - Flight Software Standards and Procedures document
  - Flight Software Verification Test Plans
- Conducted two software assurance audits at CSEO to date
  - Software assurance requirements flowdown
  - Reviewed/audited software development folders
- DPRO (DCMAO) in Colorado Springs is also auditing software development folders
- Participated in PDA, PDR, PMRS, CDA, CDR, and design walkthroughs
- Developed a software problem reporting system
- Monitoring flight software functional testing
- Performing a traceability analysis of requirements to flight software test cases

## CDR Acronym List

| | |
|---|---|
| A&T | Assembly and Test |
| AC | Air Conditioning (Launch VEhicle) |
| ACDS | Attitude Control & Determination Subsystem |
| ACQ | Acquisition |
| A/D | Analog-to-Digital |
| ADE | Attitude Determination Electonics |
| AHr | Ampere Hour |
| AOS | Acquisition of Signal |
| ARAR | Accident Risk Assessment Report |
| ARE | Array Req. Electronics |
| ARM | Array Regulator Modules |
| ASA | Aluminum Substrate Assembly |
| ASTM | American Society for Testing and Materials |
| ATC | Absolute Timed Commands |
| ATS | Absolute Time Sequence |
| BCCA | Battery Charge Control Algorithm |
| BSF | Back Surface Field |
| BSR | Back Surface Reflector |
| C/O | Check Out |
| CAL | Calibration |
| CAP | Contamination Analysis Program |
| CCB | Configuration Change Board |
| CDA | Critical Design Audit |
| CEA | Control Electronics Assembly |
| CFR | Captive Flight Release |
| CG | Center of Gravity |
| CIB | Command Input Buffer |
| CM | Center of Mass |
| CMM | Configuration Management Manual |
| CMS | Command Management System |
| CONV | Converter |
| CPT | Comprehensive Performance Test |
| CPU | Central Processing Unit |
| CSA | Command Storage Area |
| CSEO | Colorado Springs Engineering Operations |
| CSSA | Coarse Sun Sensor Assembly |
| CTV | Compatibility Test Van |
| CVCM | Collected Volatile Condensible Material |
| D/L | Downlink |
| DDLS | Deployment Device Load Simulator |
| DIU | Diode Isolation Unit |
| DMA | Direct Memory ACcess |
| DP | Data Processor |
| DPA | Destructive Physical Analysis |
| DPRO | Defense Plant Representative Office |
| DSN | Deep Space Network |
| DTM | Dual Thruster Module |
| EED | Electro-Explosive Device |
| EEDC | Electro-Explosive Device Controller |
| EEE | Electrical, Electronic, and Electromechanical |

## CDR Acronym List (Continued)

| | |
|---|---|
| EGSE | Electrical Ground Support Equipment |
| EM | Engineering Model |
| EMC | Electromagnetic Compatibility |
| EMI | Electromagnetic Interference |
| EMISM | Electromagnetic Interference Safety Margins |
| EQ | Equipment |
| ER | Established Reliability |
| ESD | Electrosstatic Discharge |
| ETB | Eagle Test Bed |
| EV | Environmental |
| FDM | Flexible Data Mux |
| FMEA | Failure Mode Effect anmd Criticality Analysis |
| FOV | Field of View |
| FPGA | Field Programmable Gate Array |
| FSA | Fail-SAfe Algorithm |
| FSSA | Fine Sun Sensor Assembly |
| GFE | Government Furnished Equipment |
| GFP | Government Furnished Property |
| $GN_2$ | Gaseous Nitrogen |
| GRA | Gyro Reference Assembly |
| GSE | Ground Support Equipment |
| GSTDN | Ground-Space Tracking and Data Network |
| H/L | Hard Line |
| H/W | Hardware |
| HEX | Base 16 (Hexadecimal) |
| HQAM | Hardware Quality Assurance Manual |
| I/C | Interface Control |
| I/F | interface |
| ICD | Interface Control Document |
| ICMT | Intercontract Material Transfer |
| IFJ | In-Flight Jumper |
| IGSE | Instrument Ground Support Equipment |
| IIS | Instrument Interface Simulator |
| IR | Instrument Review |
| IVT | Interrupt Vector Table |
| KBPS | Kilo Bits Per Second |
| KPD | Key Parameter Database |
| LDSI | Luna Defense Systems Inc. |
| LOS | Line of Sight |
| LPO | Launch Project Office |
| LV | Launch Vehicle |
| LVAB | Launch Vehicle Assembly Building |
| LVI | Launch Vehicle Interface |
| M&P | Materials and Processes |
| MDE | Motor Drive Electronics |
| MGSE | Mechanical Ground Support Equipment |
| MLI | Multilayer Insulation or Machine Language Instruction |
| MMS | Mass Memory Supervisor |
| MRB | Material Review Board |
| MTA | Magnetic Torquer Assembly |

## CDR Acronym List (Continued)

| | |
|---|---|
| MUA | Material Usage Agreement |
| Mux | Multiplexer |
| NASCOM | NASA Communication |
| NDI | Nondestructive Inspection |
| NHB | NASA Handbook |
| NiCd | Nickel Cadium |
| NO-OP | No Operation |
| NSPAR | Nonstandard Parts Approval Request |
| NVR | Non-Volatile Residue |
| OAS | Orbital Adjust Subsystem |
| OSC | Orbital Sciences Corporation |
| P-E | Perkin Elmer |
| P/B | Play BAck |
| PA | Performance Assurance |
| PAF | Payload Attach Fitting |
| PAIP | Performance Assurance and Implementation Plan |
| PAMPL | Project Approved Materials and Processes List |
| PAPL | Program Approved Parts List |
| PAR | Performance Assurance Requirement |
| PCA | Physical Configuration Audit |
| PCMTS | Power and Control/Monitor Test Set |
| PCU | Power Control Unit |
| PDA | Preliminary Design Audit |
| PDF | Programmable Data Formatter |
| PF | Powered Flight |
| PIL | Parts Identification List |
| PMPCB | Parts, Materials, and Processes Control Board |
| POCC | Payload Operation Control Center |
| PPL | Preferred Parts List |
| PPT | Peak Power Tracking |
| PRI | Primary |
| PWB | Printed Wire Board |
| QA | Quality Assurance |
| QCI | Quality Conformance Inspection |
| QD | Quality Directive |
| QPL | Qualified Parts List |
| QPR | Quality Project Requirement |
| R/T | Receive/Transmit |
| RAM | Random Access Memory |
| RDNT | Redundant |
| RF | Radio Frequency |
| RFTS | Radio Frequency Test Set |
| RIU | Remote Interface Unit |
| RPM | Revolutions Per Minute |
| RSS | Root Sum Squared |
| RT | Real Time |
| RTC | Relative Time Command |
| RTCS | Relative Timed Command Sequence |
| RWA | Reaction Wheel Assembly |
| S&MS | Structure and Mechanisms Subsystem |

## CDR Acronym List (Continued)

| | |
|---|---|
| S/A | Solar Array |
| SAR | Solar Array Regulator |
| S/C | Spacecraft |
| SC ADDR | Spacecraft Address |
| SELV | Small Expendable Launch Vehicle |
| SEMCAP | Specification Electro-Magnetic Compatibility Analysis Program |
| SEU | Single Event Upset |
| SIS | Spacecraft Interface Simulator |
| SOH | State-of-Health |
| SP | Spacecraft Processor |
| SQAM | Software Quality Assurance Manual |
| SRS | Software Requirements Specification |
| STC | System Test Controller |
| STM | Structural Test Model |
| S/W | Software |
| SWA | Scan Wheel Assembly |
| SYNC | Synchronous |
| T-O | Time Zero |
| T/C | Telemetry/Command |
| T/V | Thermal Vacuum |
| TAM | Three-Axis Magnetometer |
| TBD | To be determined |
| TBR | To be Reviewed |
| TCA | Thrust Chamber Assembly |
| TCTS | Telemetry and Command Test Set |
| TCVL | Temperature Compensated Voltage Limit |
| TDE | Torquer Drive Electronics |
| TFS | TOMS Flight Software |
| Tlm | Telemetry |
| TML | Total Mass Los |
| TRASYS | Computer Program |
| U/L | Up Link |
| USART | Universal Synchronous Asynchronous Receiver Transmitter |
| UTB | Universal Test Bed |
| UTC | Universal Time, Coordinated |
| UV/OV | Under Voltage/Over Voltage |
| VAB | Vehicle Assembly Building |
| VAX | Mini-computer |
| VCM | Volatile Condensible Material |
| VDC | Volt Direct Current |
| VDE | Valve Drive Electronics |
| VDEA | Valve Drive Electronics Assembly |
| Vp-p | Volts Peak to Peak |
| WDT | Watch Dog Timer |
| XMTR | Transmitter |
| Xponder | Transponder |