NASA SNPP Cross Track Infrared Sounder (CrIS) Level 1B Quality Flags Description Document

University of Wisconsin-Madison Space Science and Engineering Center

Version 1.0

May 2017

Joe Taylor

UW-Madison SSEC

Revision History

Document Version	Date	Comment
Draft	2016-02-18	Creation of document
0.1 (Beta3)	2016-03-24	Consistent with Beta 3 implementation
1.0 (Version 1.0RC)	2016-07-10	Updated for proposed V1.0 implementation
1.1 (Version 1.0RC)	2016-07-22	Added threshold value tables and updated dependency trees
1.2 (Version 1.0RC)	2016-07-25	Added threshold values
1.3 (Version 1.0RC)	2016-07-29	Added preliminary threshold values for "Invalid Instrument Temperature" and "Excess Thermal Drift"
1.4 (Version 1.0RC)	2016-08-01	Removed redundant check of ICT and DS window sizes from L1b Quality Invalid; removed ES Mag Spectrum Check; removed Met Laser Quality QF; added ISA Degraded QF.
1.5 (Version 1.0RC1)	2016-08-12	Added information on band specific inputs and outputs (color coded dependency trees); fixed error in rad cal quality flag = 1 (degraded) dependency tree; added l1a fill to rad cal quality flag = 2 (invalid) dependency tree.
1.6 (Version 1.0RC3)	2016-08-24	Upped Excess Thermal Drift Threshold to 1.0K
1.7 (Version 1.0RC6)	2016-10-15	Removed section with detail of RDR/SDR/GEO IDPS QFs; added caveat on known error in false positives for rad_qual and qual flags.
1.8 (Version 1.0RC7)	2016-11-07	Updated lunar intrusion info and rolling window threshold information. Added CrIS L1B reference documents.
1.9 (Version 1.0RC8)	2017-02-08	No significant changes from RC7; document reviewed for release.
1.10 (Version 1.0)	2017-05-01	Addition of introduction. No other significant changes from RC8; document reviewed for release.

Table of Contents

Figures

Tables

1 Introduction

1.1 Overview

This document provides detailed information regarding the Level 1B Quality Flag (QF) variable in Version 1.0 of the NASA Cross-track Infrared Sounder (CrIS) Level 1B (L1B) data product, including the derivation and meaning of the individual flags that make up the QF variable.

This document is intended to supplement the more general information in the NASA SNPP Cross Track Infrared Sounder (CrIS) Level 1B Product Users' Guide, Version 1.0. For guidance on using QFs, as well as other information regarding the CrIS L1B data product, refer to that document.

1.2 References

1. NASA SNPP Cross Track Infrared Sounder (CrIS) Level 1B Product Users' Guide, Version 1.0
2. NASA SNPP Cross Track Infrared Sounder (CrIS) Level 1B Delta Algorithm Theoretical Basis Document (ATBD), Version 1.0
3. Installation Instructions for the CrIS L1B Version 1.0Rc8 Software Package.
4. Cross Track Infrared Sounder (CrIS) Sensor Data Record (SDR) User's Guide, Version 1.0, NOAA Technical Report NESDIS 143
5. Joint Polar Satellite System (JPSS) Operational Algorithm Description (OAD) Document for Cross-track Infrared Sounder (CrIS) Sensor Data Record (SDR) Software, Revision E, Joint Polar Satellite System (JPSS) Ground Project Code 474 474-00071
6. Joint Polar Satellite System (JPSS) Algorithm Specification Volume I: Software Requirement Specification (SRS) for the CrIS RDR/SDR, Revision D, Joint Polar Satellite System (JPSS) Ground Project Code 474 474-00448-01-03
7. Joint Polar Satellite System (JPSS) Algorithm Specification Volume II: Data Dictionary for the CrIS RDR/SDR, Revision E, Joint Polar Satellite System (JPSS) Ground Project Code 474 474-00448-02-03-B0200
8. Joint Polar Satellite System (JPSS) Cross Track Infrared Sounder (CrIS) Sensor Data Records (SDR) Algorithm Theoretical Basis Document (ATBD), Revision C, Joint Polar Satellite System (JPSS) Ground Project Code 474 474-00

2 L1B Flag Descriptions

Table 1: l1b_qual bit assignments.

Name	Bit Assignment	Initial Release
LW L1B Quality	B0 – B1	Beta 3
MW L1B Quality	B2 – B3	Beta 3
SW L1B Quality	B4 – B5	Beta 3
Geo Quality	B6	Version 1
LW Radiometric Calibration Quality	B7 – B8	Version 1
MW Radiometric Calibration Quality	B9 – B10	Version 1
SW Radiometric Calibration Quality	B11 – B12	Version 1
LW Spectral Calibration Quality	B13 – B14	Version 1
MW Spectral Calibration Quality	B15 – B16	Version 1
SW Spectral Calibration Quality	B17 – B18	Version 1
LW Imaginary Radiance Anomaly	B19	Beta 3
MW Imaginary Radiance Anomaly	B20	Beta 3
SW Imaginary Radiance Anomaly	B21	Beta 3
LW Lunar Intrusion Detected	B22	Version 1
MW Lunar Intrusion Detected	B23	Version 1
SW Lunar Intrusion Detected	B24	Version 1
Invalid Instrument Temperature	B25	Version 1
Excess Thermal Drift	B26	Version 1
FCE Detected	B27	
FCE Correction Failed	B28	
Neon Calibration Quality	B29	Version 1
ISA Degraded	B30	Version 1
Unassigned	B31 – B47	
LW L1a ES Missing *	B48	Beta 3
MW L1a ES Missing *	B49	Beta 3
SW L1a ES Missing *	B50	Beta 3
Bit Trim Mismatch*	B51	Beta 3
Scan Line Missing 8 Sec Sci *	B52	Beta 3
Unassigned	B53 – B64	

* replicated from ES/l1a_qual

2.1 L1B Quality

These are summary flags (LW, MW, SW) with value range 0 – 3. The dependency trees are shown in Figure 1 (L1B Quality = 1) and Figure 2 (L1B Quality = 2), with the inputs summarized in Table 2. L1b Quality Flag Values are summarized in Table 3 and l1b_qual bit assignments are defined in Table 1.

Table 2: Inputs to L1b Quality dependency tree.

Input	Input Type	Reference	Version 1
Radiometric Calibration Quality	Quality Flag	Section 2.3	Yes
Spectral Calibration Quality	Quality Flag	Section 2.4	Yes
Geo Quality	Quality Flag	Section 2.2	Yes
Bit Trim Mismatch	Quality Flag	L1a QF	Yes
Scan Line Missing 8 Sec Sci	Quality Flag	L1a QF	Yes
L1a ES Missing	Quality Flag	L1a QF	Yes
Imaginary Radiance Anomaly	Quality Flag	Section 2.5	Yes
ES Spectrum	Value (test vs. threshold)	Table 4	NO (TBR)

Table 3: L1b Quality values and description

Value	Description
0	No L1B quality issues
1	L1B quality 'Degraded'. Refer to L1a, geo, L1b quality flags for more information
2	L1B quality 'Invalid'. Refer to L1a, geo, L1b quality flags for more information

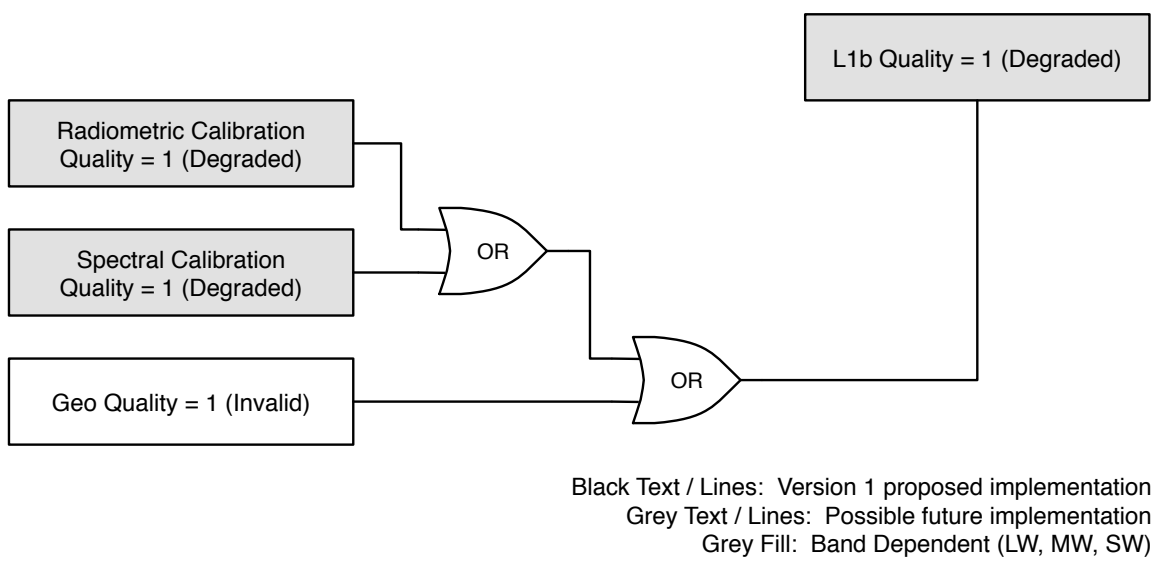

Figure 1: L1b Quality Flag dependency tree for L1b Quality = 1 (Degraded).

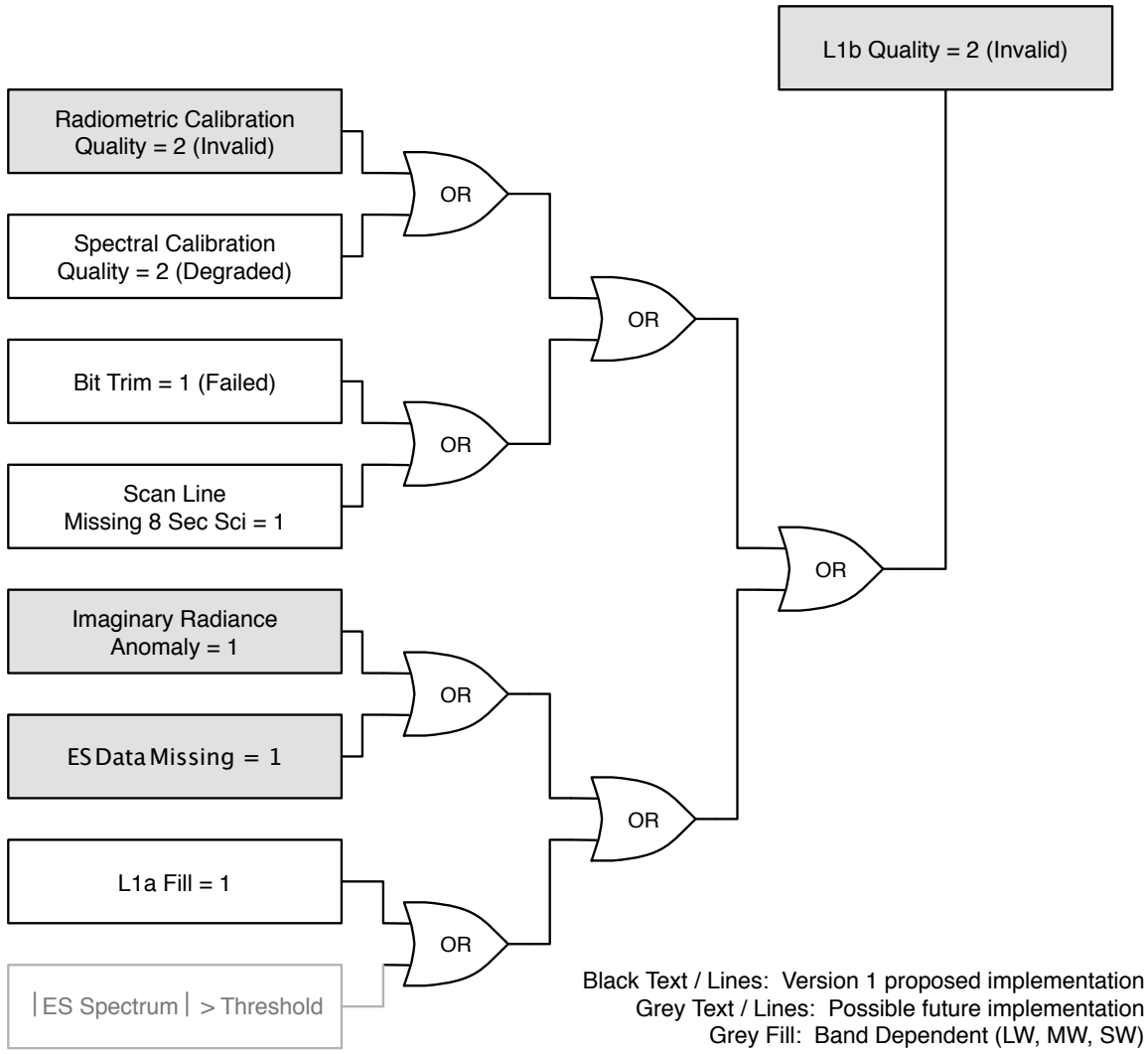

Figure 2: L1b Quality Flag dependency tree for L1b Quality = 2 (Invalid).

Table 4: Absolute ES Spectrum threshold values and wavenumber ranges

Band	Wavenumber Range for threshold check		Threshold Value
	Min (Index)	Max (Index)	
LW	242 (TBR)	530 (TBR)	
MW	234 (TBR)	394 (TBR)	
SW	40 (TBR)	80 (TBR)	

2.2 Geo Quality

This is a summary flag of the overall geolocation quality with value range 0 – 1. l1b_qual bit assignment is defined in Table 1.

Table 5: Geo Quality inputs

Input	Input Type	Reference	Version 1
obs-time-missing	Quality Flag	Geo QF	Yes
servo-errors-missing	Quality Flag	Geo QF	Yes
spacecraft-diary-missing	Quality Flag	Geo QF	Yes
stale-utcpole	Quality Flag	Geo QF	Yes

Table 6: Geo Quality values and description

Value	Description
0	No geolocation quality issues
1	Geolocation quality issues. Refer to geo_qual for more information.

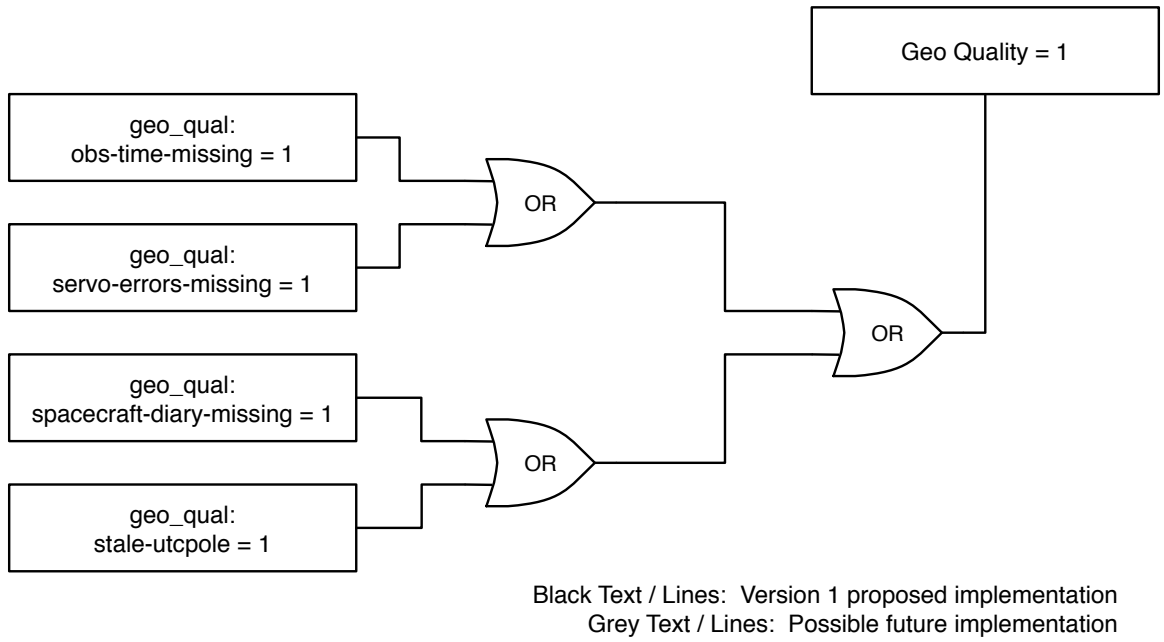

Figure 3: Geo quality dependency tree.

2.3 Radiometric Calibration Quality

These are summary flags describing the overall radiometric calibration quality (LW, MW, SW) with value range 0 – 2. The dependency trees are shown in Figure 4 (Radiometric Calibration Quality = 1) and Figure 5 (Radiometric Calibration Quality = 2), with the inputs summarized in Table 7. Radiometric Calibration Quality Flag values are summarized in Table 8, and the l1b_qual bit assignments are defined in Table 1. These flags are implemented at reduced functionality for the Version 1.0 release.

Table 7: Inputs to Radiometric Calibration Quality dependency tree

Input	Input Type	Reference	Version 1
DS Window Size	Value (test vs. threshold) Threshold = 26 if moving window size = 31	Figure 4 Figure 5	Yes
ICT Window Size	Value (test vs. threshold) Threshold = 26 if moving window size = 31	Figure 4 Figure 5	Yes
ICT Temperature Stability	Value (test vs. threshold)	Section 2.3.1	Yes
ICT Temperature Consistency	Value (test vs. threshold)	Section 2.3.2	Yes
Number of Valid PRT Temperatures	Value (test vs. threshold)	Section 2.3.3	Yes (TBR)
ES Impulse Noise Count	Value (test vs. threshold)		No (TBR)
Excess Thermal Drift	Quality Flag	Section 2.8	Yes
Invalid Instrument Temperature	Quality Flag	Section 2.7	Yes

Table 8: Radiometric Calibration Quality values and description

Value	Description
0	Good radiometric calibration
1	Degraded radiometric calibration
2	Invalid radiometric calibration

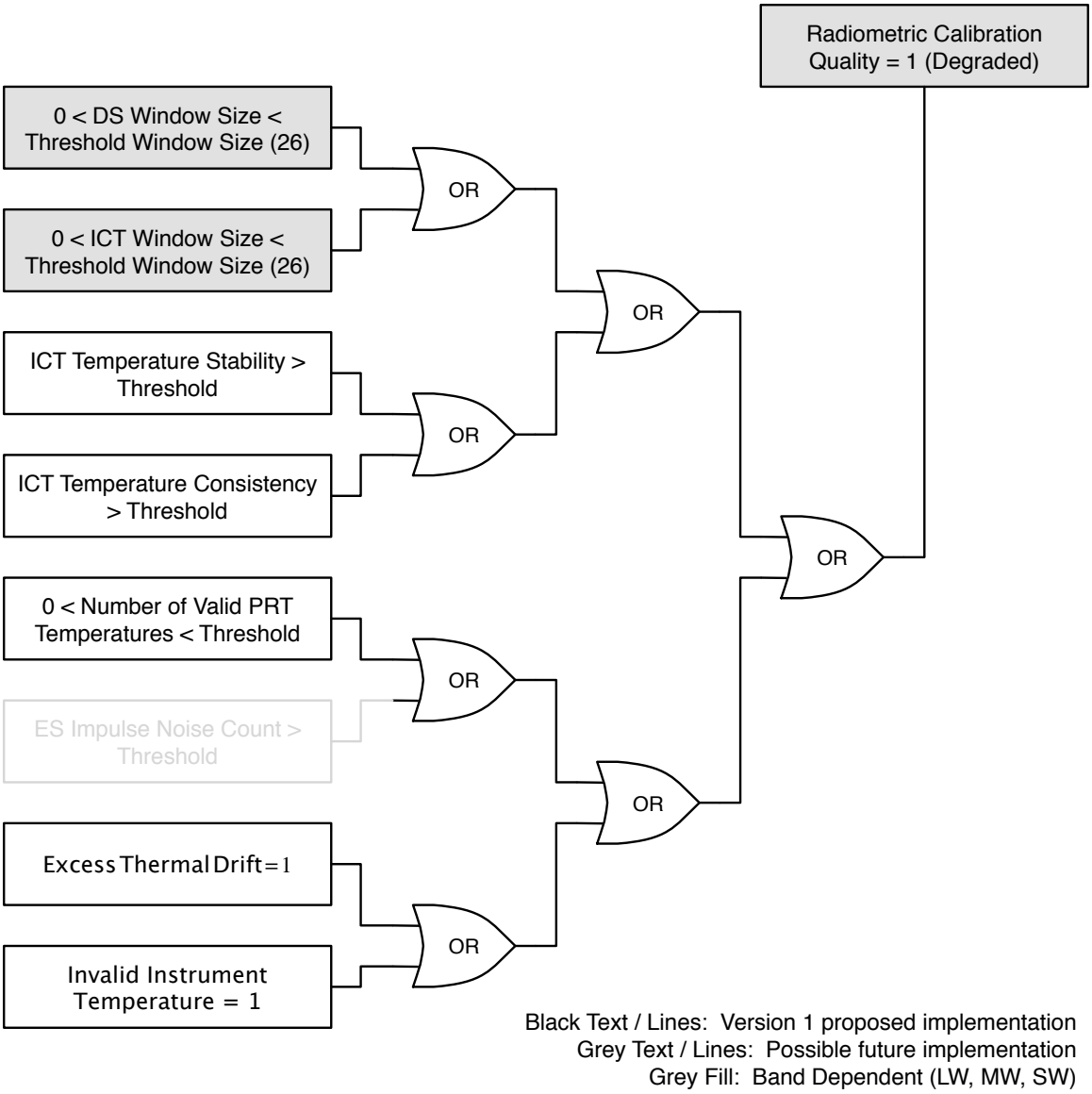

Figure 4: Radiometric Calibration Quality Flag dependency tree for Rad Cal Quality = 1 (Degraded). This flag condition is implemented with reduced functionality in Version 1.0.

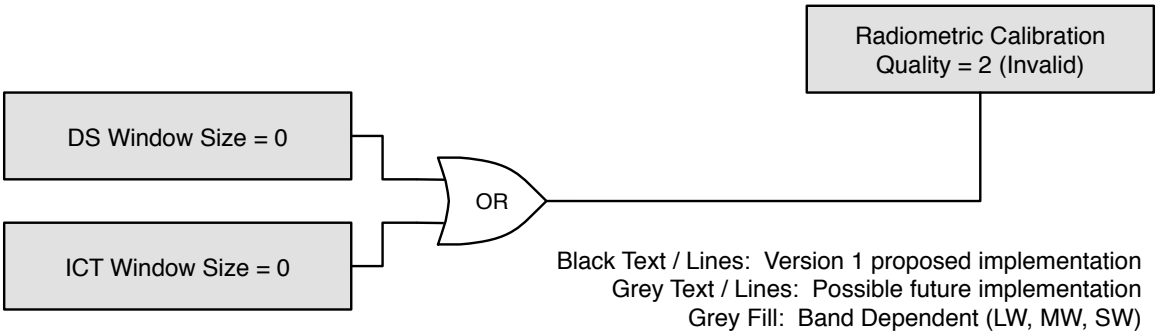

Figure 5: Radiometric Calibration Quality Flag dependency tree for Rad Cal Quality = 2 (Invalid).

2.3.1 ICT Temperature Stability

Threshold Value: 1.0 (TBR) ictTempStabilityThreshold

From the SDR User's Guide [REF1]:

ICT_TemperatureStability measures the stability of the two PRT measurements of the ICT. This variable is calculated using the following equation:

$$ICTTS = \sqrt{\sum_{i=1}^{ICTWS}\left[\bar{T}(i) - \frac{1}{ICTWS}\sum_{j=1}^{ICTWS}\bar{T}(j)\right]^2 \Big/ (ICTWS-1)} \qquad (1.1)$$

where ICTWS is the ICT Window Size, $\bar{T}(i) = \frac{1}{N}\sum_{k=1}^{N} T(i,k)$ *, where T(i,k) is the converted PRT temperature in the validated* k^{th} *epoch, represents the average ICT temperature measured from a PRT for the* i^{th} *scan. This variable is set separately for the two PRTs.*

2.3.2 ICT Temperature Consistency

Threshold Value: 1.0 (TBR) ictTempConsistencyThreshold

From the SDR User's Guide [REF1]:

ICT_TemperatureConsistency measures the consistency between the two PRT measurements of the ICT. This variable is calculated using the following equation:

$$ICTTC = \frac{1}{ICTWS}\sum_{i=1}^{ICTWS}\bar{T}_1(i) - \frac{1}{ICTWS}\sum_{i=1}^{ICTWS}\bar{T}_2(i) \qquad (1.2)$$

The nomenclature is similar to the ICT_TemperatureStability variable except that the subscripts 1 and 2 denote the two PRTs, respectively.

2.3.3 Number of Valid PRT Temperatures

The threshold value from the IDPS/ADL configuration (PCT) binary file is noted below.

Threshold Value: 15 (numOfValidPRTTempThreshold)

From the SDR User's Guide [REF1]:

numberOfValidPRTTemperatures represents the number of PRT temperatures that have been validated using the procedure described below. The mean and standard deviation of the PRT temperatures is calculated to identify any outliers, which are defined as being different from the mean by an amount of more than 3-sigma (standard deviation). The outliers do not enter subsequent processing.

2.3.4 ES Impulse Noise Count

The threshold value from the IDPS/ADL configuration (PCT) binary file is noted below.

Threshold Value: 2 (impulseNoiseCountThreshold)

2.4 Spectral Calibration Quality

These are summary flags (LW, MW, SW) describing the overall spectral calibration quality with value range 0 – 2 where the dependency trees are shown in Figure 6 (Spectral Calibration Quality = 1) and Figure 7 (Spectral Calibration Quality = 2), with the inputs summarized in Table 9. Quality Flag values are summarized in Table 10, and the l1b_qual bit assignments are defined in Table 1. These flags are implemented at a reduced functionality for the Version 1.0 release.

The usage of "Met Laser Monitored" for v1.0 remains To Be Reviewed (TBR). If it is omitted from v1.0, the dependency trees for "Degraded" and "Invalid" Spectral Calibration Quality will need to be modified accordingly.

Table 9: Inputs to Spectral Calibration Quality dependency tree

Input	Input Type	Reference	Version 1
FCE Detected	Quality Flag	Section 2.9	No
Neon Calibration Quality	Quality Flag	Section 2.11	Yes
ISA Degraded	Quality Flag	Section 2.12	Yes
Met Laser Monitored	TBD		NO

Table 10: Spectral Calibration Quality values and description

Value	Description
0	Good spectral calibration
1	Degraded spectral calibration
2	Invalid spectral calibration

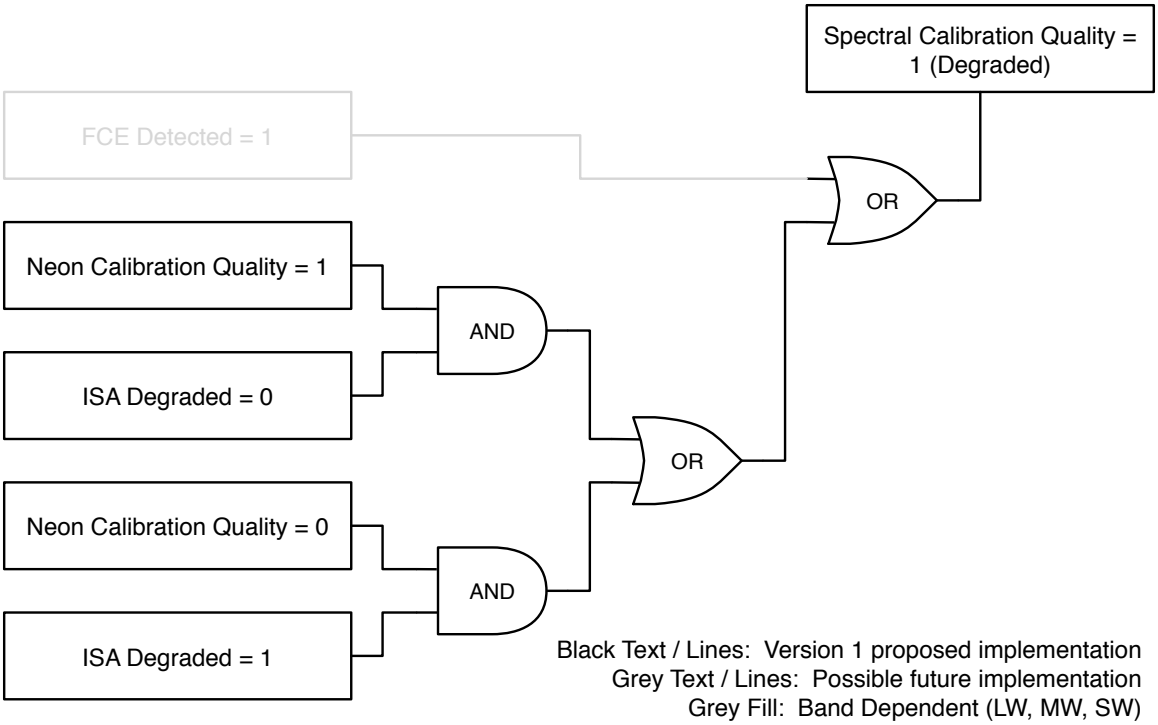

Figure 6: Spectral Calibration Quality Flag dependency tree for Spectral Cal Quality = 1 (Degraded). This flag condition is implemented with reduced functionality in Version 1.0.

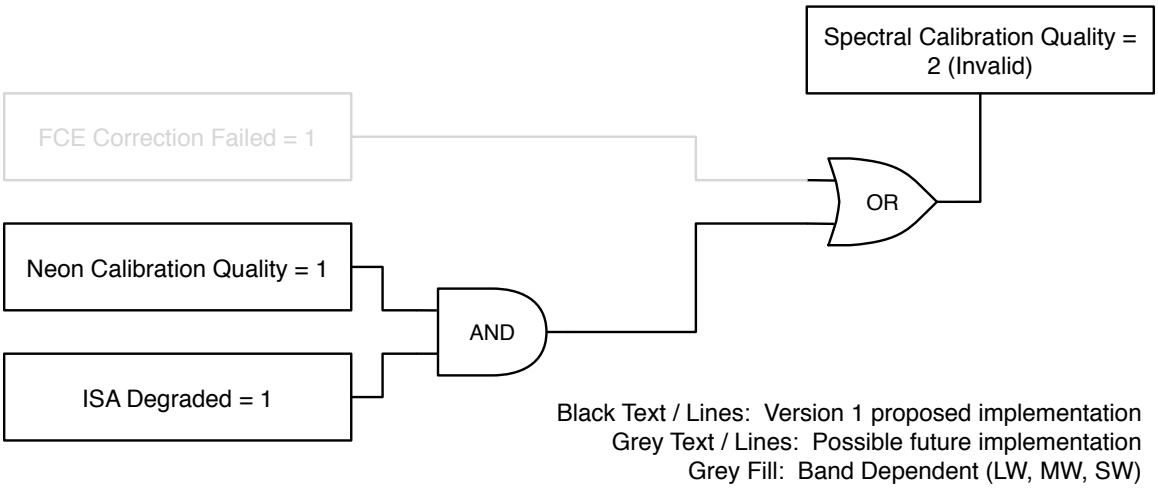

Figure 7: Spectral Calibration Quality Flag dependency tree for Spectral Cal Quality = 2 (Invalid). This flag condition is implemented with reduced functionality in Version 1.0.

2.5 Imaginary Radiance Anomaly

Large imaginary component of the calibrated radiance is an indication of poor quality of the the calibrated radiance. These flags (LW, MW, SW) indicate whether the imaginary component of the calibrated radiance exceeds the defined thresholds, with value range 0 – 1. L1b_qual bit assignments are defined in Table 1.

Table 11: Imaginary Radiance Anomaly values and description

Value	Description
0	Imaginary component of the calibrated radiance is within the threshold value
1	Imaginary component of the calibrated radiance exceeds the threshold value

Table 12: Imaginary Radiance Anomaly threshold values and wavenumber ranges

Band	Wavenumber Range for threshold check		Threshold Value
	Min (Index)	Max (Index)	
LW	242	530	+/- 1.5
MW	234	394	+/- 0.88
SW	40	80	+/- 0.05

2.6 Lunar Intrusion Detected

The Lunar Intrusion Detected flags indicate that a lunar intrusion has been detected in a significant number of the deep space reference spectra within the moving average window span. If lunar intrusion is detected, the DS spectrum is marked as invalid and excluded from the moving window average. This results in a reduced number of DS spectra in the sliding window average used in the calibration of the current observation. These flags have a range of 0 – 1, and the l1b_qual bit assignment is defined in Table 1.

Table 13: Lunar Intrusion Detected Quality Flag values and description

Value	Description
0	No DS views affected by lunar intrusion
1	At least one DS view is affected by moon within the moving window

2.7 Invalid Instrument Temperature

The Invalid Instrument Temperature flag is intended to identify the situation when the measured temperatures of certain instrument components are out of allowable ranges. These temperature measurements are used to compute the contributions of the instrument components to the ICT radiometric model. This flag has a range of 0 – 1, and the l1b_qual bit assignment is defined in Table 1.

Table 14: Invalid Instrument Temperature Quality Flag values and description

Value	Description
0	All instrument temperatures within respective thresholds
1	Instrument temperature outside of respective threshold

Table 15: Valid ranges for instrument temperatures

Temperature	Min Value	Max Value
T_PRT1	270 (TBR)	290 (TBR)
T_PRT2	270 (TBR)	290 (TBR)
OMA_structure_input_1	270 (TBR)	290 (TBR)
OMA_structure_input_2	270 (TBR)	290 (TBR)
SSM_scan_mirror	270 (TBR)	290 (TBR)
beamsplitter_1	270 (TBR)	290 (TBR)
SSM_scan_mirror_baffle	270 (TBR)	290 (TBR)

2.8 Excess Thermal Drift

The Excess Thermal Drift flag is intended to identify the situation when the measured temperature of any instrument components has drifted greater than the allowable limit. These temperature measurements are used to compute the contributions of the instrument components to the ICT radiometric model. This flag has a range of 0 – 1, and the l1b_qual bit assignment is defined in Table 1.

Table 16: Excess Thermal Drift Quality Flag values and description

Value	Description
0	No excess thermal drift of instrument temperatures
1	Thermal drift between measurements exceeds respective threshold

Table 17: Excess Thermal Drift Threshold

Temperature	Threshold
T_PRT1	+/- 1.0 (TBR)
T_PRT2	+/- 1.0 (TBR)
OMA_structure_input_1	+/- 1.0 (TBR)
OMA_structure_input_2	+/- 1.0 (TBR)
SSM_scan_mirror	+/- 1.0 (TBR)
beamsplitter_1	+/- 1.0 (TBR)
SSM_scan_mirror_baffle	+/- 1.0 (TBR)

2.9 FCE Detected

This flag has a range of 0 – 1, and the l1b_qual bit assignment is defined in Table 1. This flag is not implemented for the Version 1.0 release.

Table 18: FCE Detected Quality Flag values and description

Value	Description
0	No fringe count error detected
1	Fringe count error detected

2.10 FCE Correction Failed

This flag has a range of 0 – 1, and the l1b_qual bit assignment is defined in Table 1. This flag is not implemented for the Version 1.0 release.

Table 19: FCE Correction Failed Quality Flag values and description

Value	Description
0	FCE correction successful
1	FCE correction failed

2.11 Neon Calibration Quality

This flag has a range of 0 – 1, and the l1b_qual bit assignment is defined in Table 1.

Table 20: Neon Calibration Quality Flag values and description

Value	Description
0	Less than 25% of the neon calibration dataset varied from the mean by greater than the 28ppm threshold
1	25% or greater of the neon calibration dataset varied from the mean by greater than the 28ppm threshold

2.12 ISA Degraded

The ISA Degraded flag is intended to identify the situation when the inverse self-apodization matrices that are used in the self-apodization correction were generated for a metrology laser wavenumber that differs from the current metrology laser wavenumber by more than a pre-defined threshold. This flag has a range of 0 – 1, and the l1b_qual bit assignment is defined in Table 1.

Table 21: ISA Degraded Quality Flag values and description

Value	Description
0	Current laser wavenumber value differs by less than 15 ppm with respect to the laser wavenumber used to calculate the ISA matrices
1	Current laser wavenumber value differs by 15 ppm or greater with respect to the laser wavenumber used to calculate the ISA matrices

2.13 L1a ES Missing

This flag has a range of 0 – 1, is propagated from the corresponding ES/l1a_qual flag, and the l1b_qual bit assignment is defined in Table 1.

Table 22: L1a ES Missing Quality Flag values and description

Value	Description
0	Complete ES interferogram packet
1	Interferogram packet was not received

2.14 Bit Trim Mismatch

This flag has a range of 0 – 1, is propagated from the corresponding ES/l1a_qual flag, and the l1b_qual bit assignment is defined in Table 1.

Table 23: Bit Trim Mismatch Quality Flag values and description

Value	Description
0	Bit trim succeeded
1	Bit trim failed, too much or too little packed interferogram data

2.15 Scan Line Missing 8 Sec Sci

This flag has a range of 0 – 1, is propagated from the corresponding ES/l1a_qual flag, and the l1b_qual bit assignment is defined in Table 1.

Table 24: Scan Line Missing 8 Sec Sci Quality Flag values and description

Value	Description
0	8-sec science packet available for this scan line
1	8-sec science packet unavailable for this scan line

3 L1B to SDR quality flag comparison

Table 25: L1B to SDR quality flag comparison, sorted by SDR Quality Flag.

RDR/SDR/GEO		l1b_qual	
Quality Flag	**Quality Variable (Bit)**	**Quality Flag (# of bits)**	**Rel**
Data Gap	QF1_SCAN_CRISSDR (B0)	LW ES Missing (1) * MW ES Missing (1) * SW ES Missing (1) *	B3
Timing Sequence Error	QF1_SCAN_CRISSDR (B1)	Not implemented in V1.0	
Lambda Monitored Quality	QF1_SCAN_CRISSDR (B2)	Not implemented in V1.0	
Invalid Instrument Temperature	QF1_SCAN_CRISSDR (B3)	Invalid Instrument Temperature (1)	V1
Excess Thermal Drift	QF1_SCAN_CRISSDR (B4)	Excess Thermal Drift (1)	V1
Suspect Neon Calibration	QF1_SCAN_CRISSDR (B5)	Neon Calibration Quality (1)	V1
Lunar Intrusion Forward	QF2_CRISSDR (B0)	LW Lunar Intrusion Detected (1) MW Lunar Intrusion Detected (1) SW Lunar Intrusion Detected (1)	V1
Lunar Intrusion Reverse	QF2_CRISSDR (B1)		
SDR Overall Quality	QF3_CRISSDR (B0-B1)	LW L1B Quality (2) MW L1B Quality (2) SW L1B Quality (2)	B3
Invalid Geolocation	QF3_CRISSDR (B2)	Geo Quality (1) (TBD)	B3
Invalid Radiometric Calibration	QF3_CRISSDR (B3-B4)	LW Radiometric Calibration Quality (2) MW Radiometric Calibration Quality (2) SW Radiometric Calibration Quality (2)	V1
Invalid Spectral Calibration	QF3_CRISSDR (B5-B6)	LW Spectral Calibration Quality (2) MW Spectral Calibration Quality (2) SW Spectral Calibration Quality (2)	V1
SDR FCE Correction Failed	QF3_CRISSDR (B7)	FCE Correction Failed (1) Not implemented in V1.0	
Day/Night Indicator	QF4_CRISSDR (B0)	Not implemented in V1.0	
Invalid RDR	QF4_CRISSDR (B1)	N/A	
FCE Detected	QF4_CRISSDR (B2)	FCE Detected (1) Not implemented in V1.0	
Bit Trim Failed	QF4_CRISSDR (B3)	Bit Trim (1) *	B3
Imaginary Radiance Anomaly	QF4_CRISSDR (B4)	LW Imaginary Radiance Anomaly (1) MW Imaginary Radiance Anomaly (1) SW Imaginary Radiance Anomaly (1)	B3
		Scan Line Missing 8 Sec Sci (1) *	B3
		ISA Degraded (1)	V1

* replicated from l1a_qual

Table 26: L1B to SDR quality flag comparison, sorted by L1B Quality Flag.

Quality Flag (# of bits)	Rel	Quality Flag	Quality Variable (Bit Address)
LW L1B Quality (2) MW L1B Quality (2) SW L1B Quality (2)	Beta 3	SDR Overall Quality	QF3_CRISSDR (B0-B1)
Geo Quality (1)	Beta 3	Invalid Geolocation	QF3_CRISSDR (B2)
LW Radiometric Calibration Quality (2) MW Radiometric Calibration Quality (2) SW Radiometric Calibration Quality (2)	V1	Invalid Radiometric Calibration	QF3_CRISSDR (B3-B4)
LW Spectral Calibration Quality (2) MW Spectral Calibration Quality (2) SW Spectral Calibration Quality (2)	V1	Invalid Spectral Calibration	QF3_CRISSDR (B5-B6)
LW Imaginary Radiance Anomaly (1) MW Imaginary Radiance Anomaly (1) SW Imaginary Radiance Anomaly (1)	Beta 3	Imaginary Radiance Anomaly	QF4_CRISSDR (B4)
LW Lunar Intrusion Detected (1) MW Lunar Intrusion Detected (1) SW Lunar Intrusion Detected (1)	V1	Lunar Intrusion Forward	QF2_CRISSDR (B0)
		Lunar Intrusion Reverse	QF2_CRISSDR (B1)
Invalid Instrument Temperature (1)	V1	Invalid Instrument Temperature	QF1_SCAN_CRISSDR (B3)
Excess Thermal Drift (1)	V1	Excess Thermal Drift	QF1_SCAN_CRISSDR (B4)
FCE Detected (1) Not implemented in V1.0		FCE Detected	QF4_CRISSDR (B2)
FCE Correction Failed (1) Not implemented in V1.0		SDR FCE Correction Failed	QF3_CRISSDR (B7)
Neon Calibration Quality (1)	V1	Suspect Neon Calibration	QF1_SCAN_CRISSDR (B5)
ISA Degraded (1)	V1	N/A	N/A
Not implemented in V1.0		Lambda Monitored Quality	QF1_SCAN_CRISSDR (B2)
Not implemented in V1.0		Timing Sequence Error	QF1_SCAN_CRISSDR (B1)
LW ES Missing (1) * MW ES Missing (1) * SW ES Missing (1) *	Beta 3	Data Gap	QF1_SCAN_CRISSDR (B0)
Bit Trim (1) *	Beta 3	Bit Trim Failed	QF4_CRISSDR (B3)
Scan Line Missing 8 Sec Sci (1) *	Beta 3		
N/A		Invalid RDR	QF4_CRISSDR (B1)
Not implemented in V1.0		Day/Night Indicator	QF4_CRISSDR (B0)

* replicated from l1a_qual

4 Geolocation Flag Descriptions

The derivation and meaning of geolocation quality flags will be described in a future version of this document. However there is a brief description of the meanings of the individual geolocation flags in the NASA SNPP CrIS Level 1B Product Users' Guide, Version 1.0.

5 Caveats and Known Issues

Evaluation of an early release candidate (v1.0RC6) indicated that flags for Quality Degraded and Rad Qual Degraded include false positives. This issue was a result of false positive detection in the lunar intrusion check that was primarily occurring at the ends of the context granules, resulting in the moving average for the space view being less than nominal for the first/last few scans of the granule being calibrated.

Inspection did not reveal any real issues for the radiances flagged as degraded in these cases. For the cases reviewed, this was primarily an issue for the SW, and FOV 3 in particular, with more false degraded QFs near the South Pole.

In terms of root cause, it was determined that the threshold in the lunar intrusion check was set too tight, particularly for the SW. The short-term solution (v1.0RC7/RC8) was to increase the threshold such that these false positives are not occurring, while the lunar intrusions are still successfully detected.

The long-term solution is to further refine the lunar intrusion check algorithm. The current algorithm is based on the IDPS method but has been modified to account for the issues identified in that method, and still incorporates tighter thresholds in v1.0RC7/RC8 than used in the IDPS software.