SPACE VIEW ALBEDO ASSEMBLY FLIGHT MODEL END ITEM DATA PACK

TC-MMS-465

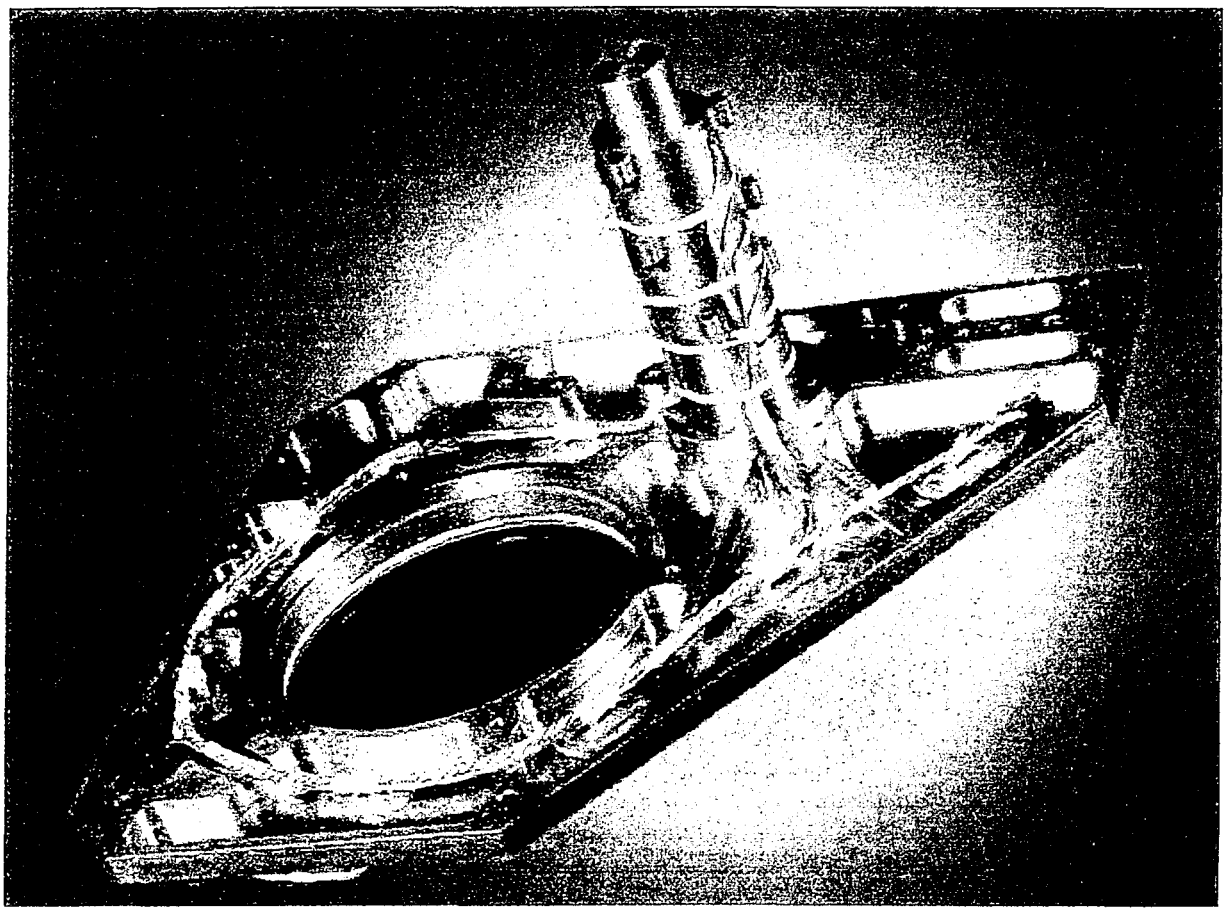

HIRDLS Project (MMS-P) Flight Hardware

STH
(Structure)

SSH
(Sunshield)

SVA
Space View
Aperture

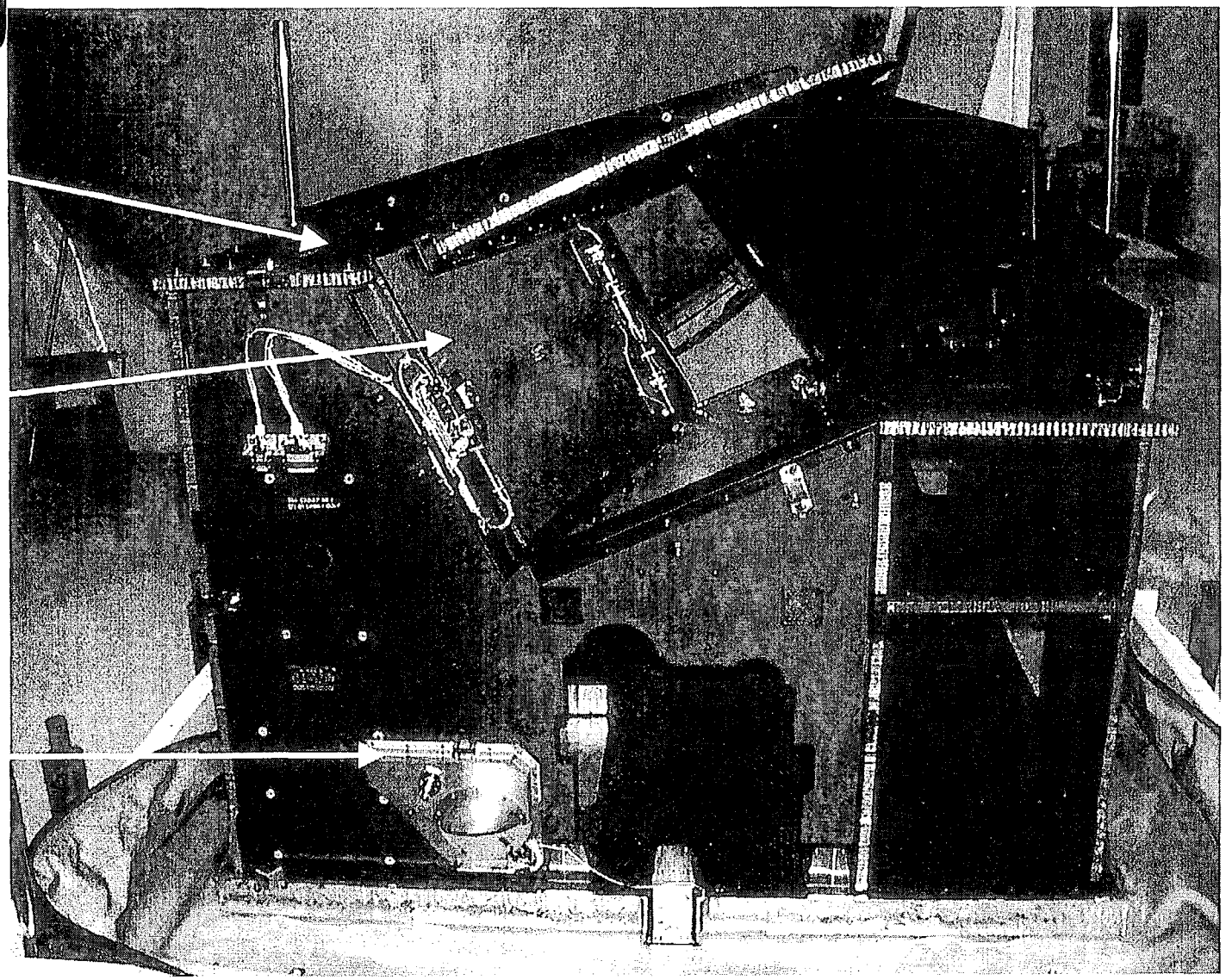

HIRDLS

TC-MMS-465
(3164-SV008-DPF)
Issue 1

HIGH RESOLUTION DYNAMICS LIMB SOUNDER

Originator: N Crossland

Date: 24 November, 1999

Subject/Title: **FM Space View Aperture Assembly End Item Data Pack**

Description/Summary/Contents:

The purpose of this data pack is to define and reconcile the design and build standard of the HIRDLS Space View Aperture (SVA) Assembly Flight Model (FM). The pack identifies, where applicable, all physical and functional non-compliance's and any additional information required for the next sequence of operations.

The package is part of the deliverable documentation requirement defined in Statement of Work PM-RAL-098A on Contract No. N2A 3R 0386.

Keywords: FM, Space View Aperture, Deliverable Data Package (EIDP)

Purpose of this Document: Deliverable Data Pack for SVA Assembly

Reviewed/Approved by:	IK STEVENS		
Date (yy-mm-dd):	00-02-01		

Matra Marconi Space
Anchorage Road
Portsmouth
Hampshire PO3 5PU
England

EOS

FM SPACE VIEW APERTURE ASSEMBLY
END ITEM DATA PACK

TC-MMS-465

Responsible Engineer: N Crosselund Date: 11 Feb 2000

Quality Assurance: D. G. Brewster Date: 14/2/00

Project Manager: IK STEWART Date: 11/2/00

© MATRA MARCONI SPACE UK LIMITED

THE COPYRIGHT IN THIS DOCUMENT IS THE PROPERTY OF MATRA MARCONI SPACE UK LIMITED. This document is supplied by Matra Marconi Space UK Limited on the express terms that it is to be treated as confidential and that it may not be copied, used or disclosed to others for any purpose except as expressly authorised under the terms of Contract No N2A 3R 0386.

Any person, other than the authorised holder, who finds or otherwise obtains possession of the document, should post it, together with his/her name and address, to the Registry, Matra Marconi Space UK Limited, Anchorage Road, Portsmouth, England, PO3 5PU. Postage will be refunded.

tcmms465.doc

CONTENTS

SECTION

1 TOP LEVEL DOCUMENTATION
- Certificate of Conformity
- Minutes of Delivery Review Board (DRB)

2 AS DESIGNED DOCUMENTATION
- As Designed Configuration Item Data List (CIDL)
- Drawing Tree and List
- Space View Aperture Assembly Interface Control Drawing
- Space View Aperture General Assembly Drawing
- Major Component Drawings
- Materials and Processes lists

3 AS BUILT DOCUMENTATION
- As Designed As Built Reconciliation (ABCL)
- Waivers List, Status and Implemented Waivers
- Major Non-Conformance Reports
- Test Procedures
- Test Reports
- Test Certificate

4 LOG BOOK
- Build Event Log
- Test Event log
- Hazardous Items sheets (If applicable)
- Limited Life Log
- Running Time Log (If applicable)
- Contamination and Cleanliness Records

5 OTHER
- Open Item Register
- User Manuals
- Safety, Handling, Packing, Transportation Precautions and Procedures

SCOPE

The purpose of this data pack is to define and reconcile the design and build standard of the HIRDLS Space View Aperture (SVA) Assembly Flight Model (FM). The pack identifies, where applicable, all physical and functional non-compliance's and any additional information required for the next sequence of operations.

The package is part of the deliverable documentation requirement defined in Statement of Work PM-RAL-098A on Contract No. N2A 3R 0386.

The Space View Aperture is essentially a hole in the STH +Y panel to allow the instrument to have a view to space as it's cold reference. The SVA Assembly comprises a movable cover for the hole with associated opening mechanism, and a fixed cover to shield the instrument from stray light and Earth albedo once the movable cover is in the fully open position.

DISTRIBUTION LIST

INTERNAL	EXTERNAL
I K Stewart	N Morris (RAL) (x2)

CHANGE RECORD

CHANGE NUMBER	CLASS	CHANGE DETAILS	ISSUE
3164- 00369	-	First Issue	1

SECTION 1

Certificate of Conformity

SECTION 1

Minutes of Delivery Review Board (DRB)

MATRA MARCONI SPACE UK LIMITED

To:N Morris

Rutherford Appleton Laboratories

Space Science Department

Chilton, Didcot, OXON

OX11 0QX

ANCHORAGE ROAD,
PORTSMOUTH, HAMPSHIRE,
ENGLAND PO3 5PU
Telex: 86666 Fax: (023) 9270 8282
Telephone: Portsmouth (023) 9270 5331

CERTIFICATE OF CONFORMITY

UK Defence Contractor List No. 55700/1/04

SERIAL No: 35965

DAMAGE AND SHORTAGE:
Claims for damage or shortage will not be entertained unless made in writing to ourselves within 3 days of receipt of goods.

NON DELIVERY:
Carriers and ourselves to be advised in writing as follows:
i. Within 3 days from date of dispatch by POST
ii. Within 23 days from date of dispatch by ROAD
iii. Within 14 days from date of dispatch by RAIL

DATE OF DESPATCH	CONTRACT No.	SUBCONTRACT OR ORDER No.	WORKS ORDER No.	MEANS OF DESPATCH	DRN No.
1-02-00	N2A 3R 0386			MMS Transport	

ITEM	FULL DESCRIPTION AND SERIAL No.	DRAWING AND/OR SPEC No.	ISS No.	QTY	BATCH No.	REMARKS
1	Space View Aperture (SVA) Assembly Serial No. FM001	HR2L040	05	1	0182080	Flight hardware delivered to Customer

CERTIFICATION

Certified that the whole of the supplies detailed hereon, unless otherwise stated above, conform in all respects to the specifications, drawing and contract/order relative thereto.

(Signed) D. G. Brewster Quality Manager D.G. BREWSTER Date 9/2/00

* ** ***

For and on behalf of MATRA MARCONI SPACE UK LIMITED

NOTES

* This certificate must be signed to be valid

** Delete as appropriate

*** Insert title as appropriate

MATRA MARCONI SPACE UK LIMITED

MINUTES OF MEETING	REFERENCE HRDLS - PA - 019
DATE 15 FEB 2000	PLACE MMS PORTSMOUTH ENGLAND
PROJECT HIRDLS	SUBJECT FLIGHT HARDWARE DELIVERY REVIEW BOARD

AGENDA WALK THRU / DISCUSSION / QUESTIONS OF FOLLOWING

1. STH – END ITEM DATA PACK (EIDP) [TC-MMS-463]
   – DESIGN CERTIFICATION DOCUMENT [TC-MMS-472]
2. MLI – EIDP [TC-MMS-466]
   – DESIGN CERT. DOC [TC-MM-475]
3. SSH – EIDP [TC-MMS-464]
   – DESIGN CERT DOC [TC-MMS-473]
4. SVA – EIDP [TC-MMS-465]
   – DESIGN CERT. DOC [TC-MMS-474]
5. WRAP UP / CONCLUSIONS.

	PARTICIPANTS	ORGANISATION	AGREEMENT (signature)
CUSTOMER	N. MORRIS (CUSTOMER)	RAL	N. Morris
	D. CARTER E. BILECKI	NASA GSFC	
	P. ROYCROFT T. PARR		
	L. LANHAM S. MEYER	LMMS	
	M. DIALS	UCB	
MMS-UK	I K STEWART	MMS	
	N. CROSSLAND	MMS	
	~~R. COUPE~~	~~SULA~~	
SUB-CONTRACTOR	R. COUPE	SULA	

STH

Re-check PL-MMS-211 and PM-MMS-212 for consistency. Up-issue documents as necessary.

Action: MMS

Materials requiring waivers – paper trial to be established.

Action: LMMS/RAL

Full bakeout report to be sent to LMMS.

Action: RAL

Section 10.0 of the Design Certificate. Outstanding action item from the Critical Design Review (RFA#2), the HIRDLS project consider this closed.

MLI

Full bakeout report to be sent to LMMS.

Action: RAL

SSH

ICD TC-HIR-227B needs to be updated to reflect the as-build hardware.

Action: LMMS/RAL

Stepper motor count versus door angle confirmed as 10 steps equals one degree.

Potentiometer resistance to stepper count – information given as 50kohms potentiometer, with an operational range of 0 to 320 degrees. Potentiometer is linear. Door closed and door open resistance values to be confirmed by measurement.

Action: RAL

Include AD590 data sheet in the EIDP.

Action: MMS/RAL

SVA

ICD TC-HIR-227B needs to be updated to reflect the as-build hardware.

Action: LMMS/RAL

Other

No issues raised.

Conclusion: Hardware is accepted for delivery to RAL.

SECTION 2

As Designed Configuration Item Data List (CIDL)

MATRA MARCONI (SPACE) LTD.
ANCHORAGE ROAD
PORTSMOUTH HAMPSHIRE

HIRDLS

F U N C T I O N A L
C O N F I G U R A T I O N I T E M D A T A L I S T

F O R

SPACE VIEW ALBEDO ASSEMBLY - FM

3164-SV010-LIE
TC-MMS-480

SECTION 1 CONTROL DOCUMENTATION

TITLE	NUMBER	AS DESIGN
SPACE VIEW ALBEDO ASSEMBLY	HR2L040	2
SUNSHIELD SUBSYSTEM SPECIFICATION	3164-SA001-SPY	D
SPACE VIEW APERTURE ASSY (FM) DRG TR	3164-SV001-21-F	2
SPACE VIEW ALBEDO ASSEMBLY ICD	3164-SV001-25-0	1

DATA LIST STATUS LOG — THIS LIST COMPRISES THE FOLLOWING SECTIONS AT ISSUE SHOWN

ISSUE	1	N/A	1	1	1	N/A	TOTALS
SECTION	1	2	3	4	5	6	5
SHEETS	1	N/A	2	1	1	N/A	

CONFIGURATION CONTROL							
PRODUCT ASSURANCE							
PROJECT MANAGER							
CUSTOMER							
ISSUE	1						
CCB DATE	9·2·00						

PROJECT HIRDLS — SHEET 1 OF 5 — NUMBER 3164-SV010-LIE

Issue : 1

Section : 3

Parent Item : HR2L040
Description : SPACE VIEW ALBEDO ASSEMBLY

Parent ECL : 05
ECO : 3164-00324

Level	Component No / Description	Engineering ECL From	To	Using ECO	Reason for Change
1	HR2L004 MOTOR ASSEMBLY	01		HRAB0001	INITIAL ISSUE
.2	GM1S422 MOTOR HOUSING	02		GMAA0161	PO-CP-MMB-GM0036/023
.2	GM1S252 END BEARING CAP	01		GMAA0097	INITIAL ISSUE
.2	GM1S253 MOTOR SHAFT	02		GMAA0145	PO-CP-MMB-GM-0036/19
.2	GM1S254 BEARING RETAINER	01		GMAA0097	INITIAL ISSUE
.2	GM1S255 SPACER	01		GMAA0097	INITIAL ISSUE
.2	GM1S256 BEARING RETAINER	01		GMAA0097	INITIAL ISSUE
.2	GM1S257 MOTOR HOUSING	02		GMAA0116	PO-CP-MMB-GM-0036/07
.2	GM1S258 SPECIAL WASHER	01		GMAA0097	INITIAL ISSUE
.2	GM1S451 SHIM PACK .002" MOTOR ASSEMBLY	01		GMAA0153	INTIAL ISSUE
.2	HR2L005 DUST CAP (MOTOR)	01		HRAB0001	INITIAL ISSUE
1	HR2L008 +Y PANEL MOUNTING PANEL	04		3164-00252	UPDATE FOR FLIGHT
1	HR2L034 COVER (PAINTING DRG)	02		3164-00266	REFLECTIVE CHANGE
.2	HR2L009 COVER	03		3164-00252	UPDATE FOR FLIGHT
1	HR2L010 MOUNTING BRACKET (MICROSWITCH)	01		HRAB0002	INITIAL ISSUE
1	HR2L011 MOUNTING BRACKET	01		HRAB0002	INITIAL ISSUE
1	HR2L012 MOUNTING BRACKET	01		HRAB0002	INITIAL ISSUE
1	HR2L013 MOUNTING BRACKET	01		HRAB0003	INITIAL ISSUE
1	HR2L014 SCREW STOP	02		3164-00252	UPDATE FOR FLIGHT
1	HR2L015 MOUNTING BRACKET	01		HRAB0003	INITIAL ISSUE
1	HR2L016 MOUNTING FLANGE	03		3164-00252	UPDATE FOR FLIGHT
1	HR2L017 INTERFACE	1		HRAB0004	INITIAL ISSUE (BRISTOL FOURMAN ITEM)

Issue : 1

Section : 3

Parent Item : HR2L040
Description : SPACE VIEW ALBEDO ASSEMBLY

Parent ECL : 05
ECO : 3164-00324

Level	Component No / Description	Engineering ECL From	To	Using ECO	Reason for Change
1	HR2L018 SCREW SPECIAL	1		HRAB0004	INITIAL ISSUE (BRISTOL FOURMAN ITEM)
1	HR2L019 STOP	1		HRAB0004	INITIAL ISSUE (BRISTOL FOURMAN ITEM)
1	HR2L021 SLEEVE	1		HRAB0005	INITIAL ISSUE (BRISTOL FOURMAN ITEM)
1	HR2L022 SPIGOT	1		HRAB0005	INITIAL ISSUE (BRISTOL FOURMAN ITEM)
1	HR2L023 HOUSING	3		HRAB0020	MOD TO INCLUDE COVER STOP (BRISTOL FOURMAN ITEM)
1	HR2L024 GUIDE	2		3164-00252	UPDATE FOR FLIGHT
1	3164-SV007-20 COVER STOP	01		3164-00255	FIRST ISSUE
1	HR2L056 TORSION SPRING	01		HRAA0048	INITIAL ISSUE
1	HR2L057 HOUSING TORSION SPRING	02		3164-00252	UPDATE FOR FLIGHT
1	3164-SV006-20 SPRING SUPPORT HOUSING	02		3164-00295	REMOVE POSSIBLE FOULING
1	HR2L058 STOP SPRING	02		3164-00321	COVER NOT HELD CLOSED
1	HR2L025 BRACKET (CONNECTOR)	03		3164-00252	UPDATE FOR FLIGHT
1	HR2L035 MOUNTING BRACKET	03		3164-00252	UPDATE FOR FLIGHT
1	HR2L036 ALBEDO SHIELD	02		HRAB0015	MATERIAL SPEC ADDED
1	HR2L027 SHIM	1		HRAB0011	INITIAL ISSUE (BRISTOL FOURMAN ITEM)
1	HR2L028 SPECIAL BUSH	01		HRAB0019	INITIAL ISSUE
1	HR2L029 SHIM PACK (SPECIAL BUSH)	01		HRAB0019	INITIAL ISSUE
1	GM1S424 ADAPTOR PLATE	01		GMAA0142	PO-CP-MMB-GM-0036/17
1	HR2L031 BOLT SPECIAL	1		HRAB0022	FIRST ISSUE
1	HR2L032 WASHER BRACKET SPECIAL	1		HRAB0022	FIRST ISSUE
1	HR2L033 SPACER	1		HRAB0022	FIRST ISSUE

Issue : 1
Section : 4 TOOL PROCESSING DOCUMENTATION

Parent Item : HR2L040
Description : SPACE VIEW ALBEDO ASSEMBLY

Parent ECL : 05
ECO : 3164-00324

List No.	MMS Document Number	External Document Number	Design Issue	Document Title
1	TAA2123		1	SEAL LOCATION TOOL
2	TAA2124		1	ASSEMBLY FIXTURE (VIBRATION)
3	TAA2125		1	LATCH RETAINER ASSEMBLY
4	TAA2126		1	LOCATION PLUG (ALBEDO SHIELD)
5	TAA2127		1	SVA ASSEMBLY FIXTURE
6	TAA2128		1	THERMAL VAC AND ASSEMBLY FIXTURE

Issue : 1

Section : 5 DESIGN REVIEW DOCUMENTATION

Parent Item : HR2L040
Description : SPACE VIEW ALBEDO ASSEMBLY

Parent ECL :04
ECO :3164-00324

List No.	MMS Document Number	Ext Document Number	Design Issue	Document Title
1	3164-11005-LIZ	PA-MMS-317	1	MISSION ASSURANCE REQUIREMENTS COMPLIANCE MATRIX
2	3164-11005-TNO	PA-MMS-096	1	PA REQUIREMENTS COMPLIANCE MATRIX
3	3164-11007-TNO	PA-MMS-453	1	STH, SSH AND SVA RISK REGISTER
4	3164-12001-PLC	SP-MMS-073	A	CADM PLAN
5	3164-18002-LIM	PL-MMS-211	~~2~~ 3	DECLARED MATERIALS LIST
6	3164-18003-LIS	PL-MMS-212	~~2~~ 3	DECLARED PROCESSES LIST
7	3164-SA010-SME	SW-MMS-358	A	INSTRUMENT FIELD OF VIEW
8	3164-SA028-TPF	TP-MMS-451	3	SPACE VIEW APERTURE ASSEMBLY FM TEST PROCEDURE
9	3164-SS001-DAI	DW-MMS-449	1	FM STH SUBSYSTEM ASSEMBLY INSTRUCTION
10	3164-SS003-ANA	PA-MMS-210	E	STH AND SSH FMECA
11	3164-SS004-ANR	PA-MMS-209	E	STH AND SSH RELIABILITY PREDICTION
12	3164-SS055-PLT	TP-MMS-248	C	STH, SSH AND SVA DESIGN DEVELOPMENT AND TEST PLAN
13	3164-SS067-RPZ	TC-MMS-381	A	INSTRUMENT THERMAL ANALYSIS REPORT
14	3164-SS069-ANH	PA-MMS-386	A	HAZARD ANALYSIS REPORT MMS SUPPLIED SUBSYSTEMS
15	3164-SS070-PLP	PA-MMS-387	A	MMS SUBSYSTEMS CLEANLINESS AND CONTAMINATION CONTROL PLAN
16	3164-SS073-TNO	TC-MMS-399	1	INSTRUMENT FM CONFIGURATION AND INTEGRATION PLAN
17	3164-SS075-ANZ	TC-MMS-206	H	STH AND SSH SUBSYSTEM MASS ESTIMATE
18	3164-SS090-MAI	SP-MMS-455	2	FM STRUCTURE/THERMAL SUBSYSTEM ASSEMBLY AND DISASSEMBLY HANDBOOK
19	3164-SS091-TNO	TC-MMS-454	1	FM STH/SSH/SVA VENTING
20	3164-SV001-DAI	DW-MMS-389	2	SVA ASSEMBLY PROCEDURE
21	3164-SV004-DPE	TC-MMS-438	A	EM SPACE VIEW APERTURE ASSEMBLY END ITEM DATA PACKAGE
22	3164-SV012-TRF	TR-MMS-485	1	FM SVA VIBRATION TEST REPORT
23	3164-SV013-TRF	TR-MMS-486	1	FM SVA THERMAL VACUUM & FUNCTIONAL TEST REPORT
24	SP-MMS-355	SP-MMS-355	1	PROCUREMENT SPEC SVA GEARHEAD DRIVE
25	SP-MMS-356	SP-MMS-356	1	PROCUREMENT SPEC FOR FRAMELESS BRUSHED DC MOTOR
26	SP-MMS-357	SP-MMS-357	1	PROCUREMENT SPEC FOR POTENTIOMETER
27	TC-MMS-384	TC-MMS-384	1	SSH AND SVA DESIGN ANALYSIS REPORT

SECTION 2

SVA Subsystem Family Tree DW-MMS-437

HIRDLS

DW-MMS-437
(3164-SV001-21-F)
Issue 2

HIGH RESOLUTION DYNAMICS LIMB SOUNDER

Originator: N Crossland Date: 24 January, 2000

Subject/Title: **Flight Model (FM) Space View Aperture Assembly Drawing Tree and List**

Description/Summary/Contents:

The purpose of this document is to define the design drawing tree and drawing list for the Flight Model Space View Aperture Assembly (HR2L040), which is part of the SSH subsystem.

Keywords: HIRDLS, Flight, SVA, Design

Purpose of this Document: Definition of SVA Assembly drawing tree and list

Reviewed/Approved by:			
Date (yy-mm-dd):	00-01-25		

Rutherford Appleton Laboratory
Chilton
Didcot
Oxfordshire
OX11 0QX
United Kingdom

Matra Marconi Space UK
Anchorage Road
Portsmouth
Hants PO3 5PU
United Kingdom

EOS

ORIGINAL WHEN RED

FLIGHT MODEL (FM)
SPACE VIEW APERTURE ASSEMBLY
DRAWING TREE AND LIST

DW-MMS-437

Responsible Engineer: N Grossland Date: 24th Jan 2000

Quality Assurance: D.G. Brewster Date: 25/1/00

Project Manager: Date: 25/1/00

© MATRA MARCONI SPACE UK LIMITED

THE COPYRIGHT IN THIS DOCUMENT IS THE PROPERTY OF MATRA MARCONI SPACE UK LIMITED. This document is supplied by Matra Marconi Space UK Limited on the express terms that it is to be treated as confidential and that it may not be copied, used or disclosed to others for any purpose except as expressly authorised under the terms of Contract No N2A 3R 0386.

Any person, other than the authorised holder, who finds or otherwise obtains possession of the document, should post it, together with his/her name and address, to the Registry, Matra Marconi Space UK Limited, Anchorage Road, Portsmouth, England, PO3 5PU. Postage will be refunded.

CONTENTS

1. SCOPE 4

2. APPLICABLE DOCUMENTS 4

3. DRAWING TREE 5

4. DRAWING LIST 6

4.1 DRAWN PARTS 6
4.2 COMMON PARTS 7

DISTRIBUTION LIST 8

CHANGE RECORD 8

1. SCOPE

This document defines the design drawing tree and drawing list for the Flight model Space View Aperture assembly (HR2L040), which is part of the SSH subsystem.

2. APPLICABLE DOCUMENTS

The latest issues of the following documents were applicable at the date of issue of this document.

AD1 SP-HIR-050
Sunshield Subsystem Requirements Specification

AD2 DW-MMS-268
Space View Aperture Assembly Interface Control Drawing

3. DRAWING TREE

DRAWING NUMBER	TITLE	QTY
HR2L040	**SPACE VIEW APERTURE ASSEMBLY**	**1**
|– HR2L004	MOTOR ASSEMBLY	1
|– HR2L003	FRAMELESS DC MOTOR ICD	2
|– HR2L005	DUST COVER	1
|– HR2L006	MOTOR SHAFT ICD	1
|– GM1S252	END BEARING CAP	1
|– GM1S253	MOTOR SHAFT	1
|– GM1S254	BEARING RETAINER	1
|– GM1S255	SPACER	1
|– GM1S256	BEARING RETAINER	1
|– GM1S257	MOTOR HOUSING	1
|– GM1S258	SPECIAL WASHER	1
|– GM1S422	MOTOR HOUSING	1
|– GM1S451	SHIM PACK	1
|– HR2L008	+Y PANEL MOUNTING PLATE	1
|– HR2L034	COVER (PAINTING DRG)	1
|– HR2L009	COVER	1
|– HR2L010	MOUNTING BRACKET (MICROSWITCH)	1
|– HR2L011	MOUNTING BRACKET (MICROSWITCH)	1
|– HR2L012	MOUNTING BRACKET (STOP)	1
|– HR2L013	MOUNTING BRACKET (STOP)	1
|– HR2L014	SCREW STOP	1
|– HR2L015	MOUNTING BRACKET (STOP)	1
|– HR2L016	SEAL MOUNTING FLANGE	1
|– HR2L017	DRIVE INTERFACE	1
|– HR2L018	SPECIAL SCREW	1
|– HR2L019	STOP	1
|– HR2L021	LOCKING SLEEVE	1
|– HR2L022	SPIGOT	1
|– HR2L023	HOUSING	1
|– HR2L024	COVER GUIDE	1
|– HR2L025	MOUNTING BRACKET (CONNECTOR)	1
|– HR2L027	SHIM SET	1
|– HR2L028	SPECIAL BUSH	1
|– HR2L029	SHIM PACK (SPECIAL BUSH)	1
|– HR2L030	RESISTOR SOT SET	1
|– HR2L031	BOLT SPECIAL (SVA MOUNTING)	5
|– HR2L032	WASHER (SPECIAL)	5
|– HR2L033	SPACER	5
|– HR2L035	MOUNTING BRACKET (ALBEDO SHIELD)	1
|– HR2L036	ALBEDO SHIELD	1
|– GM1S424	ADAPTOR PLATE	1
|– 3164-SV006-20	SPRING SUPPORT HOUSING	1
|– 3164-SV007-20	COVER STOP	1

4. DRAWING LIST

4.1 Drawn Parts

DRAWING NUMBER	CUSTOMER NUMBER	DRAWING DESCRIPTION	QTY NO.	ISSUE N0.
3164-SV001-25-0	DW-MMS-268	SPACE VIEW APERTURE ICD	1	1
3164-SV006-20-3	N/A	SPRING SUPPORT HOUSING	1	2
3164-SV007-20-3	N/A	COVER STOP	1	1
HR2L003	N/A	FRAMELESS DC MOTOR ICD	2	1
HR2L004	N/A	MOTOR ASSEMBLY	1	1
HR2L006	N/A	MOTOR SHAFT ICD	1	1
HR2L008	N/A	+Y PANEL MOUNTING PLATE	1	4
HR2L009	N/A	COVER	1	3
HR2L010	N/A	MOUNTING BRACKET (MICROSWITCH)	1	1
HR2L011	N/A	MOUNTING BRACKET (MICROSWITCH)	1	1
HR2L012	N/A	MOUNTING BRACKET (STOP)	1	1
HR2L013	N/A	MOUNTING BRACKET (STOP)	1	1
HR2L014	N/A	SCREW STOP	1	1
HR2L015	N/A	MOUNTING BRACKET (STOP)	1	1
HR2L016	N/A	SEAL MOUNTING FLANGE	1	2
HR2L017	N/A	DRIVE INTERFACE	1	1
HR2L018	N/A	SPECIAL SCREW	1	1
HR2L019	N/A	STOP	1	1
HR2L021	N/A	LOCKING SLEEVE	1	1
HR2L022	N/A	SPIGOT	1	1
HR2L023	N/A	HOUSING	1	3
HR2L024	N/A	COVER GUIDE	1	1
HR2L025	N/A	MOUNTING BRACKET (CONNECTOR)	1	2
HR2L027	N/A	SHIM SET	1	1
HR2L028	N/A	SPECIAL BUSH	1	1
HR2L029	N/A	SHIM PACK (SPECIAL BUSH)	1	1
HR2L031	N/A	BOLT (SPECIAL) SVA MOUNTING	5	1
HR2L032	N/A	WASHER (SPECIAL)	5	1
HR2L033	N/A	SPACER	5	1
HR2L034	N/A	COVER (PAINTING DRG)	1	1
HR2L035	N/A	MOUNTING BRACKET (ALBEDO SHIELD)	1	2
HR2L036	N/A	ALBEDO SHIELD	1	2
HR2L040	DW-MMS-267	SPACE VIEW APERTURE ASSEMBLY	1	1
HR2L056	N/A	TORSION SPRING	1	1
HR2L057	N/A	HOUSING, TORSION SPRING	1	1

4.2 Common Parts

DRAWING NUMBER	CUSTOMER NUMBER	DRAWING DESCRIPTION	QTY NO.	ISSUE N0.
GM1S252	N/A	END BEARING CAP	1	1
GM1S253	N/A	MOTOR SHAFT	1	2
GM1S254	N/A	BEARING RETAINER	1	1
GM1S255	N/A	SPACER	1	1
GM1S256	N/A	BEARING RETAINER	1	1
GM1S257	N/A	MOTOR HOUSING	1	2
GM1S258	N/A	SPECIAL WASHER	1	1
GM1S422	N/A	MOTOR HOUSING	1	2
GM1S424	N/A	ADAPTOR PLATE	1	1
GM1S451	N/A	SHIM PACK	1	1

DISTRIBUTION LIST

INTERNAL	EXTERNAL
K Stewart	N Morris (RAL)
N Crossland	

CHANGE RECORD

CHANGE NUMBER	CLASS	CHANGE DETAILS	ISSUE
3164-00339	-	First Issue	1
3164-00352	II	Addition of 2 new items + issue no. update	2

SECTION 2

SVA Interface Control Drawing DW-MMS-268

SERVICE DRAWING NO.
DW-MMS-268

SHEET NO. 1 OF 2

SECURITY CLASSIFICATION
UNCLASSIFIED

USED ON

ISSUES BEFORE CERTIFYING

HKD	ISS	A.N.NO
	A	00174

3rd ANGLE PROJECTION

350 MILLIMETRES FULL SIZE

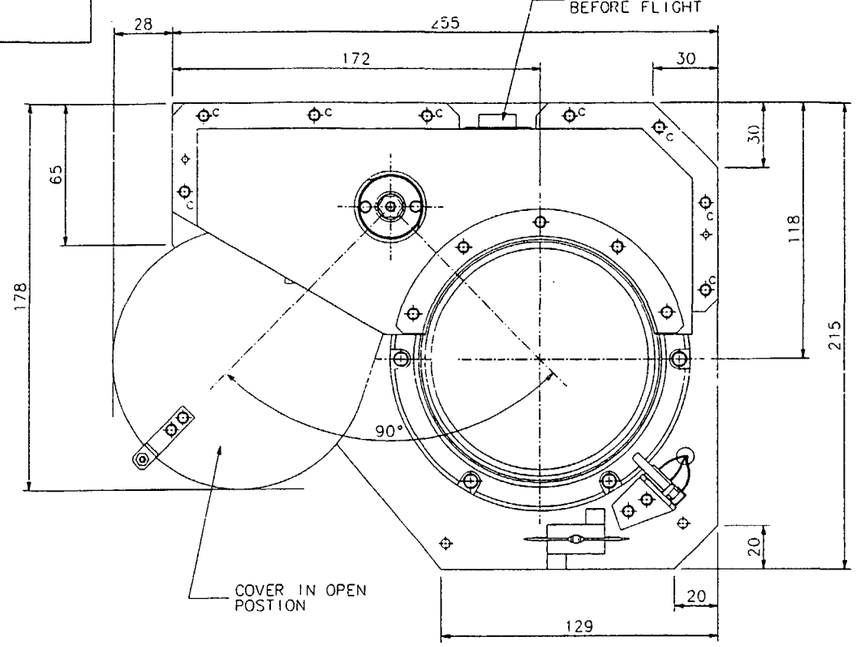

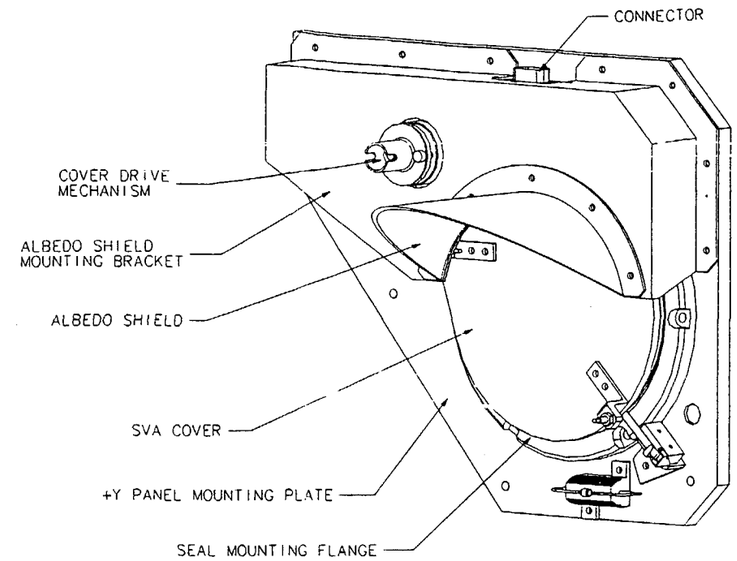

ISOMETRIC VIEW

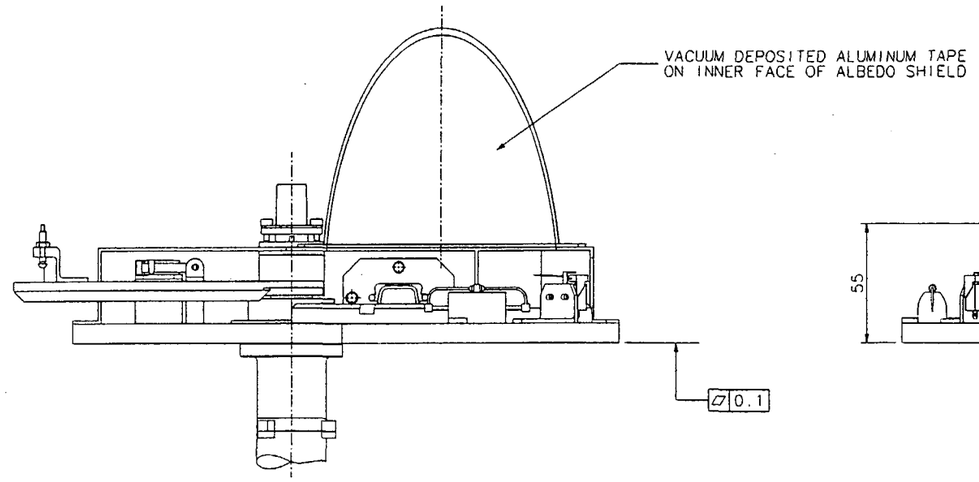

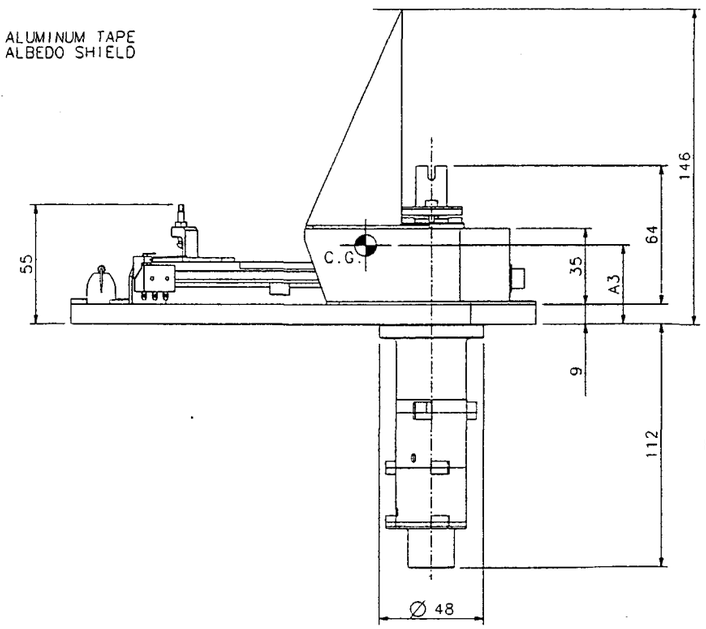

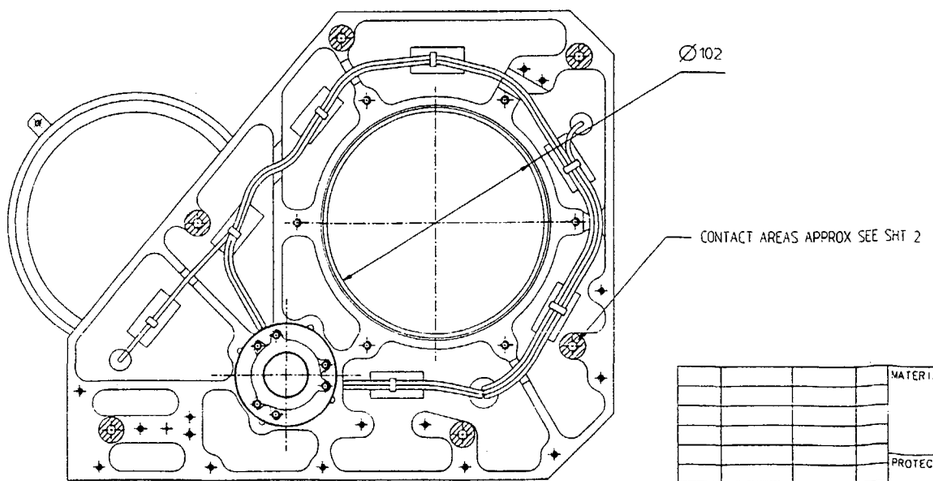

NOTES

1 FOR THERMAL MECHANICAL & ELECTRICAL INTERFACES SEE SHT 2

2 TORQUE TIGHTEN FASTENERS AT POSITONS :----
MARKED a, 0.5 Nm } FOR METHOD OF ATTACHMENT
MARKED b, 2.2 Nm } SEE SHT 2
MARKED c, 0.55 Nm —— M3 SEE SHT 1

3 MATERIALS:---- SEE SPEC PL-MMS-211

4 REMOVE M3 SCREWS AT POSITIONS MARKED c, ALBEDO SHIELD HR2L036, AND MOUNTING BRACKET HR2L035, PRIOR TO TORQUE TIGHTENING OF SVA MOUNTING BOLTS REPLACE ALBEDO SHIELD AND MOUNTING BRACKET, AND M3 SCREWS AT POSITIONS MARKED c. TORQUE AS PER NOTE 2 AND LOCK

CAD MODEL

DESIGN APPD RTSCOUPE

CERTIFIED

CHECKED R.WEST 20.8.98

DRAWN R.WEST AUG 98

C.A.D. GENERATED 85308

ISS	DATE	A.N.No.	CHKD
01	16/11/99	00342	

MATERIAL

PROTECTIVE FINISH

ESTIMATED MASS (kg)

SCALE (ORIGINAL) 1:1

DIMENSIONS IN MILLIMETRES

TOLERANCES

UNLESS OTHERWISE STATED

TITLE
SPACE VIEW ALBEDO ASSEMBLY ICD

N.S.N.

MATRA MARCONI SPACE
MATRA MARCONI SPACE UK
ANCHORAGE ROAD, PORTSMOUTH, ENGLAND, PO3 5PU

MOD ESTABLISHMENT

RESPONSIBLE AUTHORITY

SECURITY CLASSIFICATION
UNCLASSIFIED

MMS DRAWING NO.
3164-SV001-25-0

SHEET NO. 1 OF 2

SERVICE DRAWING NO.
DW-MMS-268

SHEET NO. 1 OF 2

A 0

COPYRIGHT:
MATRA MARCONI SPACE UK LTD.

THE COPYRIGHT IN THIS DOCUMENT IS THE PROPERTY OF MATRA MARCONI SPACE UK LIMITED. THIS DOCUMENT IS SUPPLIED BY MATRA MARCONI SPACE ON THE EXPRESS TERMS THAT IT IS TO BE TREATED AS CONFIDENTIAL AND THAT IT MAY NOT BE COPIED, USED OR

SERVICE DRAWING NO. DW-MMS-268 | SHEET NO 2 OF 2

3rd ANGLE PROJECTION

350 MILLIMETRES FULL SIZE

SECURITY CLASSIFICATION: UNCLASSIFIED

USED ON

ISSUES BEFORE CERTIFYING

CHKD	ISS	A.N.NO
	A	00174

THERMAL INTERFACE		
SURFACE FINISH	α =0.93 ϵ =0.78	
CONTACT AREA	678 mm² TOTAL APPROX	
HEAT DISSIPATION	0.0 WATT	
THERMAL CAPACITY	2000 J/°K	
TEMPERTURE °C	OPERATING	-25 TO 0
	NON-OPERATING	-35 TO+10
	COLD START	-25

MECHANICAL INTERFACE		
MASS	ALLOCATED	5.0Kg(INCL.SSH)
	WEIGHED	1.701 Kg
CENTRE OF GRAVITY	A1	57.32 mm
	A2	37.64 mm
	A3	-7.14 mm
MOMENT OF INERTIA	Ixx	0.0010 Kgm²
	Iyy	0.0012 Kgm²
	Izz	0.0015 Kgm²
MOUNTING SURFACE	FLATNESS 0.1	
	TEXTURE 3.2 uM	
SUBSYSTEM ATTACHEMENT	M4 BOLTS SEE NOTE 2	
ELECTRICAL BONDING	VIA CONNECTOR INTERFACE	

ELECTRICAL INTERFACE			
STYLE	IDENT	TYPE	FUNCTION
PLUG	AMP GSFC206498-4	15 WAY	

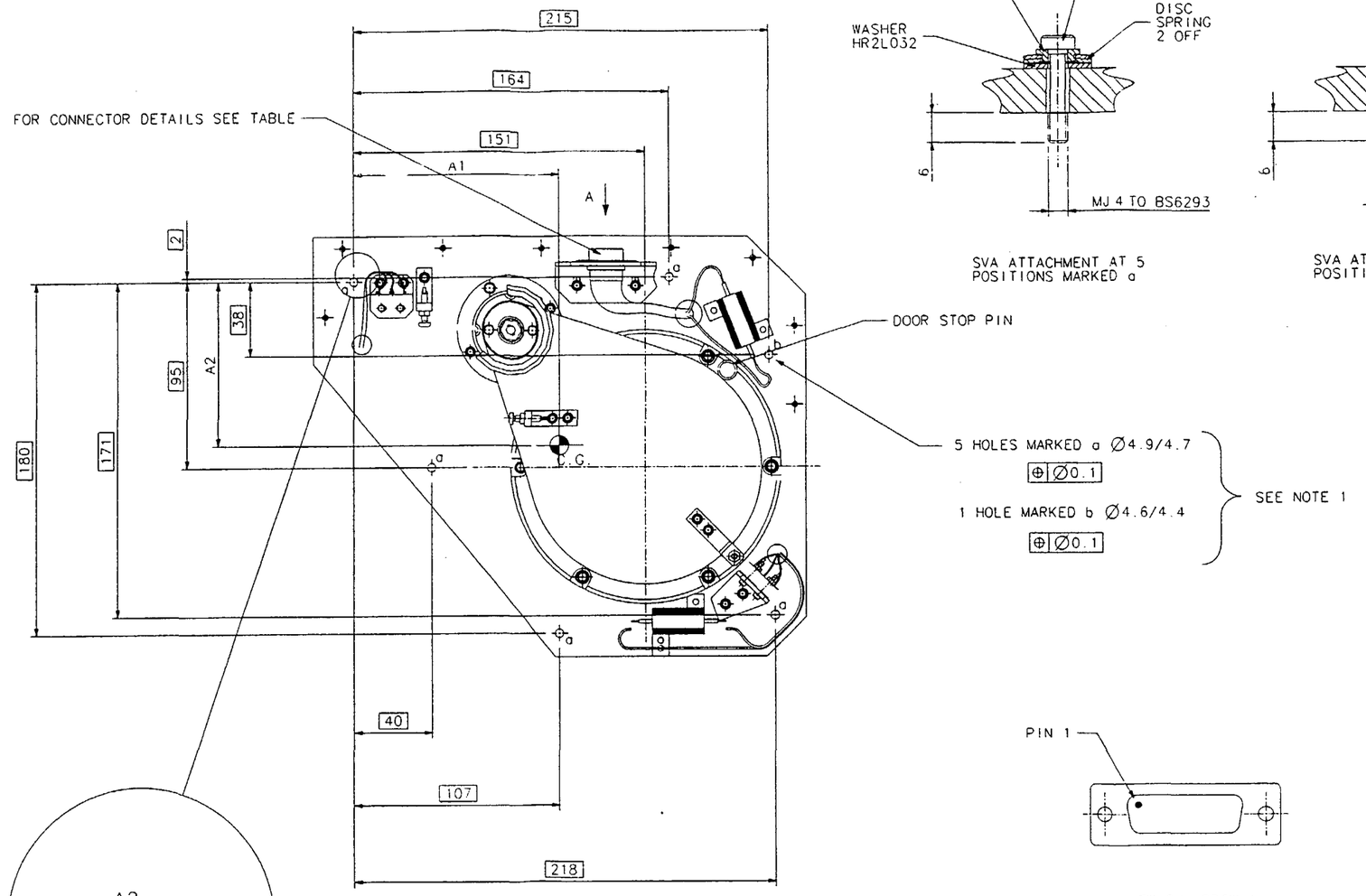

SVA ASSEMBLY (COVER IN CLOSED POSITION) ALBEDO SHEILD AND ALBEDO SHEILD MOUNTING BRACKET OMITTED

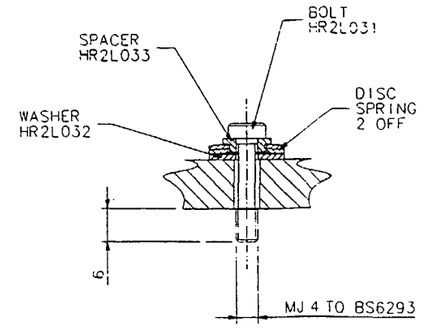

SVA ATTACHMENT AT 5 POSITIONS MARKED a

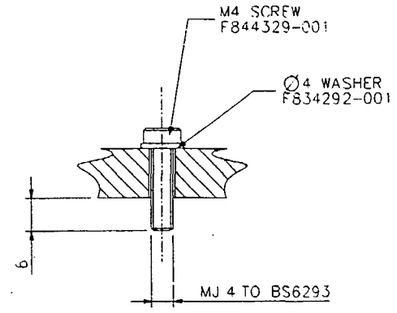

SVA ATTACHMENT AT 1 POSITION MARKED b

VIEW ON ARROW A MATING FACE

CAD MODEL

DESIGN APPD RTSCOUPE

CERTIFIED

CHCKED R.WEST 20.8.98

DRAWN R.WEST AUG 98

C.A.D. GENERATED BS308

ISS	DATE	A.N.No.	CHKD	ISS	DATE	A.N.No.	CHKD
				01	16/11/99	00342	

MATERIAL

PROTECTIVE FINISH

ESTIMATED MASS (kg)

SCALE (ORIGINAL) 1:1

DIMENSIONS IN MILLIMETRES

TOLERANCES

UNLESS OTHERWISE STATED

TITLE: SPACE VIEW ALBEDO ASSEMBLY ICD

N.S.N.

MATRA MARCONI SPACE
MATRA MARCONI SPACE UK
ANCHORAGE ROAD, PORTSMOUTH, ENGLAND, PO3 5PU

MOD ESTABLISHMENT

RESPONSIBLE AUTHORITY

SECURITY CLASSIFICATION: UNCLASSIFIED

MMS DRAWING NO. 3164-SV001-25-0 | SHEET NO 2 OF 2

SERVICE DRAWING NO. DW-MMS-268 | SHEET NO 2 OF 2

COPYRIGHT: MATRA MARCONI SPACE UK LTD.

THE COPYRIGHT IN THIS DOCUMENT IS THE PROPERTY OF MATRA MARCONI SPACE UK LIMITED. THIS DOCUMENT IS SUPPLIED BY MATRA MARCONI SPACE ON THE EXPRESS TERMS THAT IT IS TO BE TREATED AS CONFIDENTIAL AND THAT IT MAY NOT BE COPIED USED OR

SECTION 2

Space View Albedo
General Assembly Drawing HR2L040

SERVICE DRAWING NUMBER-SHEET NO. ——— | 3rd ANGLE PROJECTION

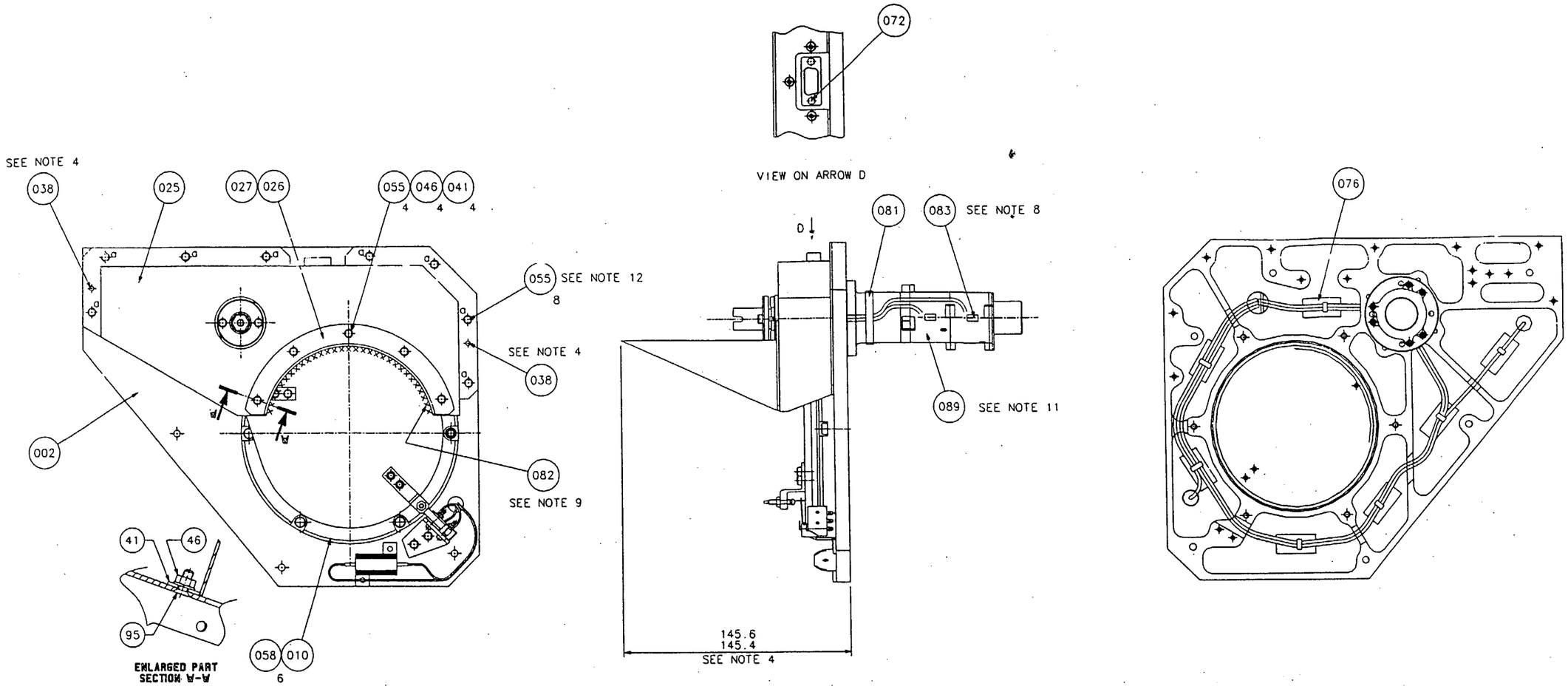

NOTES

1 CLEANLINESS STANDARD TO PS2058 GRADE 2X

2 TORQUE TIGHTEN ITEMS AS SHOWN IN TABLE BELOW TO THE REQUIREMENTS OF PS2039 APPENDIX A USING THE VALUES LISTED BELOW

ITEM NO	RUNNING TORQUE (Nm)	PRE-TENSION TORQUE (Nm)	MAXIMUM TORQUE (Nm)
012	-	0.45-0.55	0.55
034	-	0.4-0.5	0.5
045	-	0.21-0.25	0.25
049 & 050	-	0.21-0.25	0.25
023 & 052	-	0.21-0.25	0.4
046 & 054	-	0.45-0.55	0.55
055 & 056	-	0.45-0.55	0.55
057	-	2.1-2.2	2.2
058	0-0.05	2.1-2.3	2.35
061	0-0.05	2.1-2.3	2.35
NO.4-40 UNC FIXINGS SUPPLIED WITH ITEM 067 GEARBOX			
	-	0.42-0.52	0.52

3 LOCK ALL FASTENERS USING ITEMS 078,079,& 080 IN ACCORDANCE WITH PS2143 METHODS AA,AC,& AE

4 LOOSELY ASSEMBLE ITEMS 025 & 026.ALIGN ITEM 026 USING SHIELD LOCATION BUNG TAA2126.SPOT THROUGH Ø3.019/3.009 IN ITEM 025,& Ø2.997/2.987 IN ITEM 002.TORQUE TIGHTEN ITEMS 046 & 054 AS PER NOTE 2. PRESS FIT AND BOND ITEM 038 USING ITEMS 078,079 & 080 TO PS2024 MIX 36 AND ASSEMBLY PROCEDURE DW-MMS-389.SHIM TO SUIT DIMENSION SHOWN PRIOR TO TORQUE TIGHTENING OF FASTENERS

5 PREPARATION FOR PRODUCING & BONDING OF SEAL

CLEAN ITEM 010 & 070 TO PS2058 METHOD 2X

APPLY PRIMER ITEM 062 TO ITEM 070 AND BONDING AREA OF ITEM 010

LAY ITEM 070 AROUND GROOVE IN ITEM 010 AS SHOWN TO DETERMINE DEVELOPED LENGTH OF SEAL.REDUCE NOMINAL LENGTH BY 2.5.BUTT JOINT AND RETAIN WITH KAPTON TAPE ITEM 064.COVERING FULL DIA WITH A SINGLE LAYER

BOND ITEM 070 TO ITEM 010 USING ADHESIVE ITEM 063 PREPARED TO PS2024 MIX 10 WITH A FILLET AS SHOWN IN DETAIL C SHT 2

ADHESIVE FULL CURE 7 DAYS

FOLLOWING CURE CUT 2 VENTS DIAMETRICALLY OPPOSITE IN TUBE ITEM 070

6 HARNESS TO BE FORMED AND ROUTED AS SHOWN TO SUIT ON ASSY AND LACED USING ITEM 075.SEAL KNOTS USING ITEMS 078,079,080 IN ACCORDANCE WITH PS2024 MIX 36

7 POSITION TY BASES ITEM 076 IN APPROXIMATE POSITIONS SHOWN BOND IN POSITION USING ITEMS 078,079 & 080 IN ACCORDANCE WITH PS2024 MIX 36.SECURE HARNESS USING ITEM 075

8 BOND THERMISTORS ITEM 083 IN APPROXIMATE POSITIONS SHOWN TO ENGINEERS INSTRUCTIONS USING ITEMS 078,079,& 080, IN ACCORDANCE WITH PS2024 MIX 36

9 INSIDE FACE OF ITEM 026 MARKED XXXXX TO BE COVERED WITH TAPE ITEM 082

10 ASSEMBLE HARNESS IN ACCORDANCE WITH ES623 (CDST-CA001-STE)

11 SPLICE USING CRIMPS ITEM 089 AND INSULATE AS REQUIRED IN ACCORDANCE WITH PS2508

12 DO NOT TORQUE TIGHTEN ITEM 55 WHERE MARKED a. FINGER TIGHTEN ONLY

13 SPOT BOND WIRES FROM ITEM 33 IN APPROX POSITIONS SHOWN USING ITEMS 078,079 & 080.

14 SVA ATTACHMENT FIXINGS ITEMS 034,035,036,042,057,& 094 TO BE BAGGED AND TEMPORARY ATTACHED TO MAIN ASSY UNTIL REQUIRED

15 SET POSITION OF BRACKET, ITEM 24 WITH A CLEARANCE OF 2mm FROM ITEM 25.

16 REDUCE FREE OPERATING CLEARANCE OF MICROSWITCH LEVERS BY FITTING SHRINK SLEEVE (ITEM 87) OVER LIMIT STOP AS REQUIRED.

17 REDUCE LENGTH OF SCREW, ITEM 54 TO 5mm.

18 LUBRICATE NUT, ITEM 68 GUIDE PIN, ITEM 18 WITH BRAYCOTE 601 (ITEM 110).

19 DRIVE COVER (ITEM 3) TO SEALED POSITION, ENSURE CORRECT CONTACT BETWEEN COVER AND SEAL. MEASURE DISTANCE BETWEEN COVER EDGE AND STOP MTG. HOLE. MACHINE COVER STOP TO MEASURED DATA -0,012. SEE SHEET 2.

27
ES 601

02	2466-062297
01	HRA800YO
ISSUE	E.C.O. NUMBER
FOR DETAILS OF CHANGE AND SIGNATURES SEE E.C.O.	
DRAWN	M. BALLBRIDGE
DATE	4-05-99

MATRA MARCONI SPACE

TITLE SPACE VIEW ALBEDO ASSEMBLY

SECURITY CLASSIFICATION

SHT 01 OF 03

HR2L040

SERVICE DRAWING NUMBER DW-MMS-267

ISS 01

SC.5533

~~SEE ASSOCIATED BILL OF MATERIAL~~

UNLESS OTHERWISE STATED STANDARD MANUFACTURING REQUIREMENTS TO ARE MANDATORY

ORIGINAL SCALE 1:1

UNLESS OTHERWISE STATED UNIT OF MEASUREMENT: MILLIMETRES

MATERIAL	FORM	PROTECTIVE FINISH
SEE BOM	-	-
	SPEC. -	SPEC. -

THIS PART MUST BE WEIGHED AND THE WEIGHT RECORDED IN ACCORDANCE WITH EP55

SPACECRAFT COMPONENT

STANDARD OF FINISH :IMPORTANT

HANDLE AND STORE WITH EXTREME CARE

MATRA MARCONI SPACE UK LIMITED OWNS THE COPYRIGHT OF THIS DOCUMENT WHICH IS SUPPLIED IN CONFIDENCE AND WHICH SHALL NOT BE USED FOR ANY PURPOSE OTHER THAN THAT FOR WHICH IT IS SUPPLIED AND SHALL NOT IN WHOLE OR IN PART BE REPRODUCED OR COPIED OR COMMUNICATED TO ANY PERSON WITHOUT WRITTEN PERMISSION FROM THE OWNER © MATRA MARCONI SPACE UK LIMITED 1998

SERVICE DRAWING NUMBER-SHEET NO. _____ | 3-d ANGLE PROJECTION

NOTES CONTINUED:

20. NUT (ITEM 061), STOP (ITEM 013) AND GEARBOX SHAFT (ITEM 067) TO BE LOCKED TOGETHER USING PIN (ITEM 115). SPOTFACE Ø2.5+0.5 TO WITNESS, PRIOR TO DRILLING AND REAMING FOR PIN.

21. BOND SPRING SUPPORT HOUSING (ITEM 022) TO COVER (ITEM 003) IN POSITION AS SHOWN IN DETAIL VIEW (DRG. LOC. G18), USING ITEMS 078, 079 & 080 IAW PS2143 METHOD AE. POSITION HOUSING SO THAT IT IS CENTERED ON THE BOSS OF ITEM 003, USING A SUITABLE ALIGNMENT TOOL.

22. POSITION AND SANDWICH TORSION SPRING (ITEM 020) BETWEEN THE SPRING SUPPORT HOUSING (ITEM 022) AND UPPER HOUSING (ITEM 021) AS SHOWN IN DETAIL VIEW (DRG. LOC. F15). BOND UPPER HOUSING (ITEM 021) TO THE BOSS OF ITEM 003 IN THE POSITION SHOWN, USING ITEMS 078, 079 & 080 IAW PS2143 METHOD AE.

23. MOTOR HARNESS TO LIE WITHIN Ø60 ENVELOPE AND STAKED TO MOUNTING PANEL (ITEM 002) USING ITEM 063, SEE SECTION A-A.

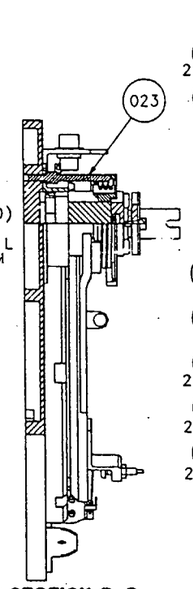

PART SECTION D-D

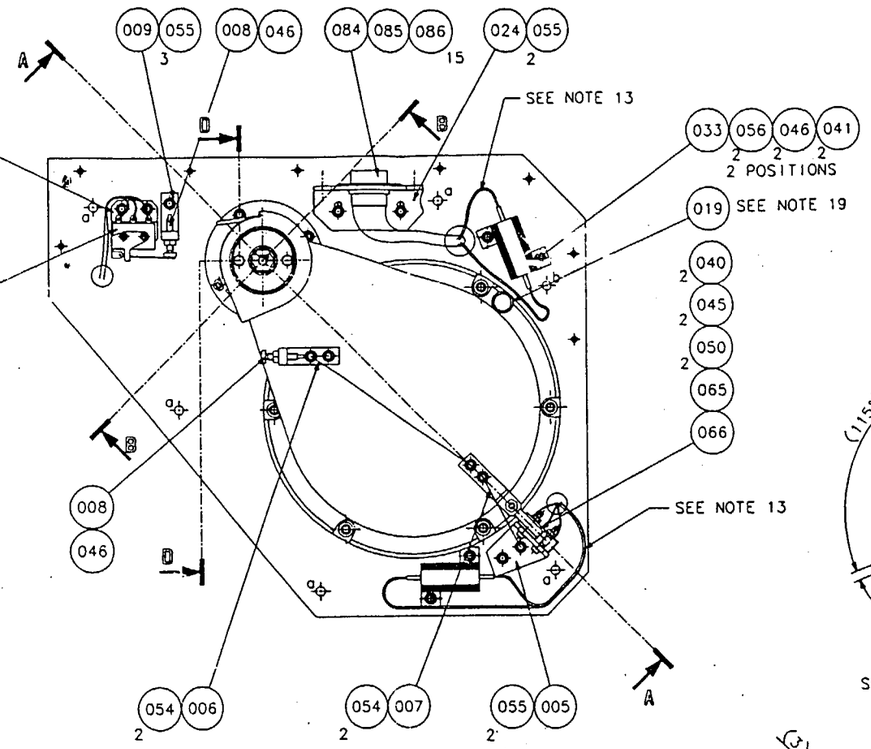

PLAN VIEW OF SPACE VIEW ALBEDO ASSY WITH ITEMS 025 & 026 REMOVED

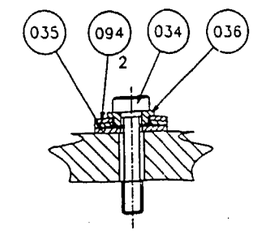

SVA ATTACHMENT AT 5 POSITIONS MARKED a
SCALE 2.5:1
SEE NOTE 14

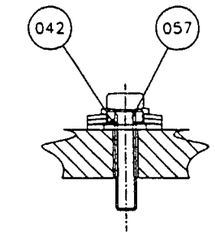

SVA ATTACHMENT AT 1 POSITION MARKED b
SCALE 2.5:1
SEE NOTE 14

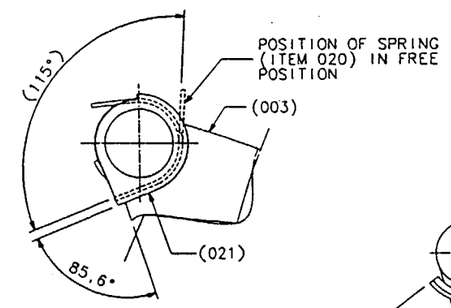

PART VIEW SHOWING SPRING/COVER ORIENTATION (SEE NOTE 21)

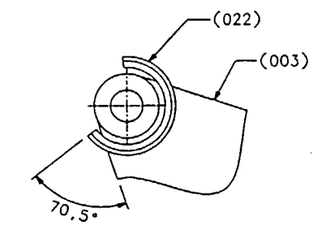

PART VIEW SHOWING COVER/SPRING SUPPORT HOUSING POSITIONING (SEE NOTE 21)

No.4-40 UNC FIXINGS SUPPLIED WITH ITEM 067 GEARBOX

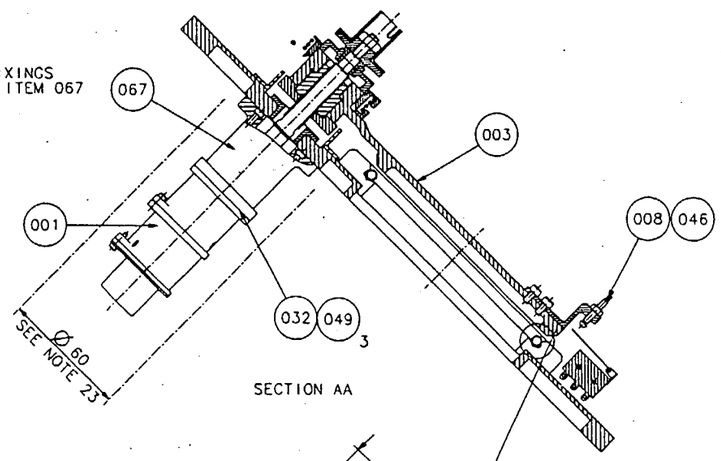

SECTION AA

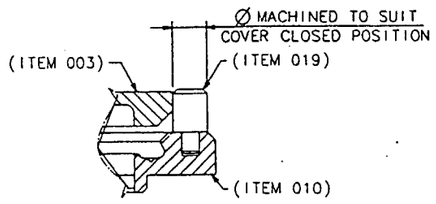

SECTION THRO ITEM 19
(SCALE 1:1)
SEE NOTE 19

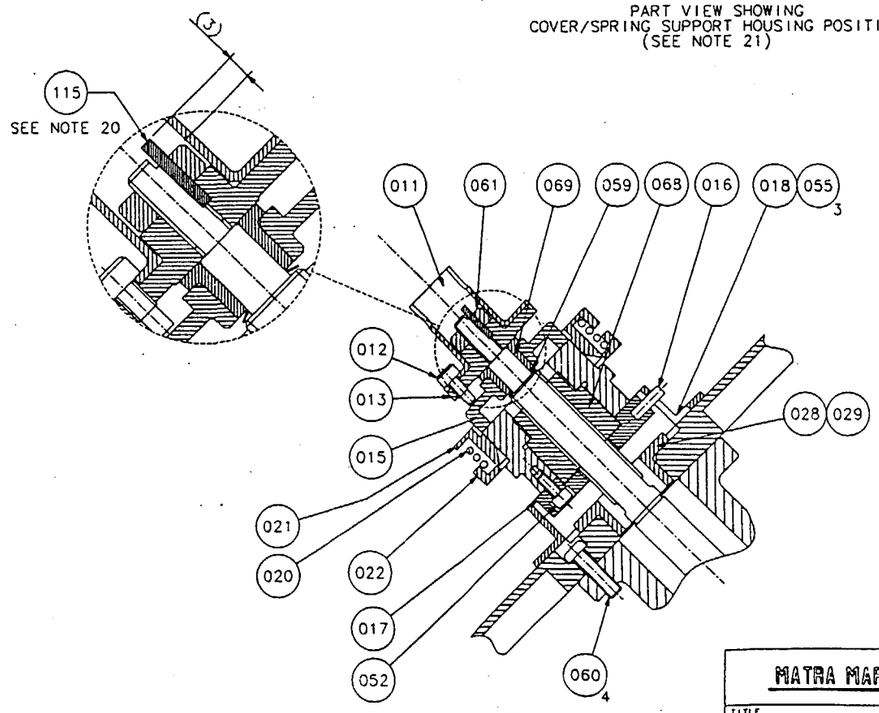

SECTION BB SCALE 2:1

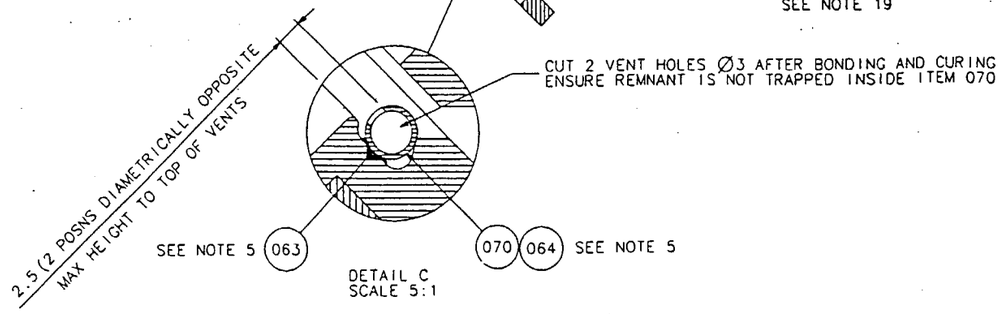

DETAIL C
SCALE 5:1

02	164-00297
01	HRA80018
ISSUE	E.C.O. NUMBER
FOR DETAILS OF CHANGE AND SIGNATURES SEE E.C.O.	
DRAWN	W. WALLBRIDGE
DATE	04-05-99

MATRA MARCONI SPACE

TITLE SPACE VIEW ALBEDO ASSEMBLY

SECURITY CLASSIFICATION

SHT 02 OF 03

HR2L040

SERVICE DRAWING NUMBER DW-MMS-267

ISSUE A

~~SEE ASSOCIATED BILL OF MATERIAL~~	ORIGINAL SCALE 1:1	
UNLESS OTHERWISE STATED STANDARD MANUFACTURING REQUIREMENTS TO ARE MANDATORY	UNLESS OTHERWISE STATED UNIT OF MEASUREMENT: MILLIMETRES	
MATERIAL	FORM	PROTECTIVE FINISH
-	- SPEC. -	- SPEC. -

THIS PART MUST BE WEIGHED AND THE WEIGHT RECORDED IN ACCORDANCE WITH EP55

SPACECRAFT COMPONENT

STANDARD OF FINISH IMPORTANT
HANDLE AND STORE WITH EXTREME CARE

MATRA MARCONI SPACE UK LIMITED OWNS THE COPYRIGHT OF THIS DOCUMENT WHICH IS SUPPLIED IN CONFIDENCE AND WHICH SHALL NOT BE USED FOR ANY PURPOSE OTHER THAN THAT FOR WHICH IT IS SUPPLIED AND SHALL NOT IN WHOLE OR IN PART BE REPRODUCED OR COPIED OR COMMUNICATED TO ANY PERSON WITHOUT WRITTEN PERMISSION FROM THE OWNER © MATRA MARCONI SPACE UK LIMITED 1998

SC.5533

SERVICE DRAWING NUMBER-SHEET NO. _____ | 3rd ANGLE PROJECTION

DOOR OPERATIONS

DESCRIPTION	TYPE	PIN No.	DOOR OPERATION (VOLTS) TO OPEN	TO CLOSE
MOTOR A	DRIVE RTN	3 14	+28 0	0 +28
MOTOR B	DRIVE RTN	4 9	+28 0	0 +28

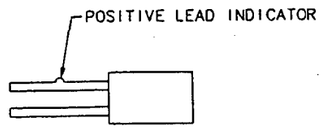

AD590 PIN DESIGNATION

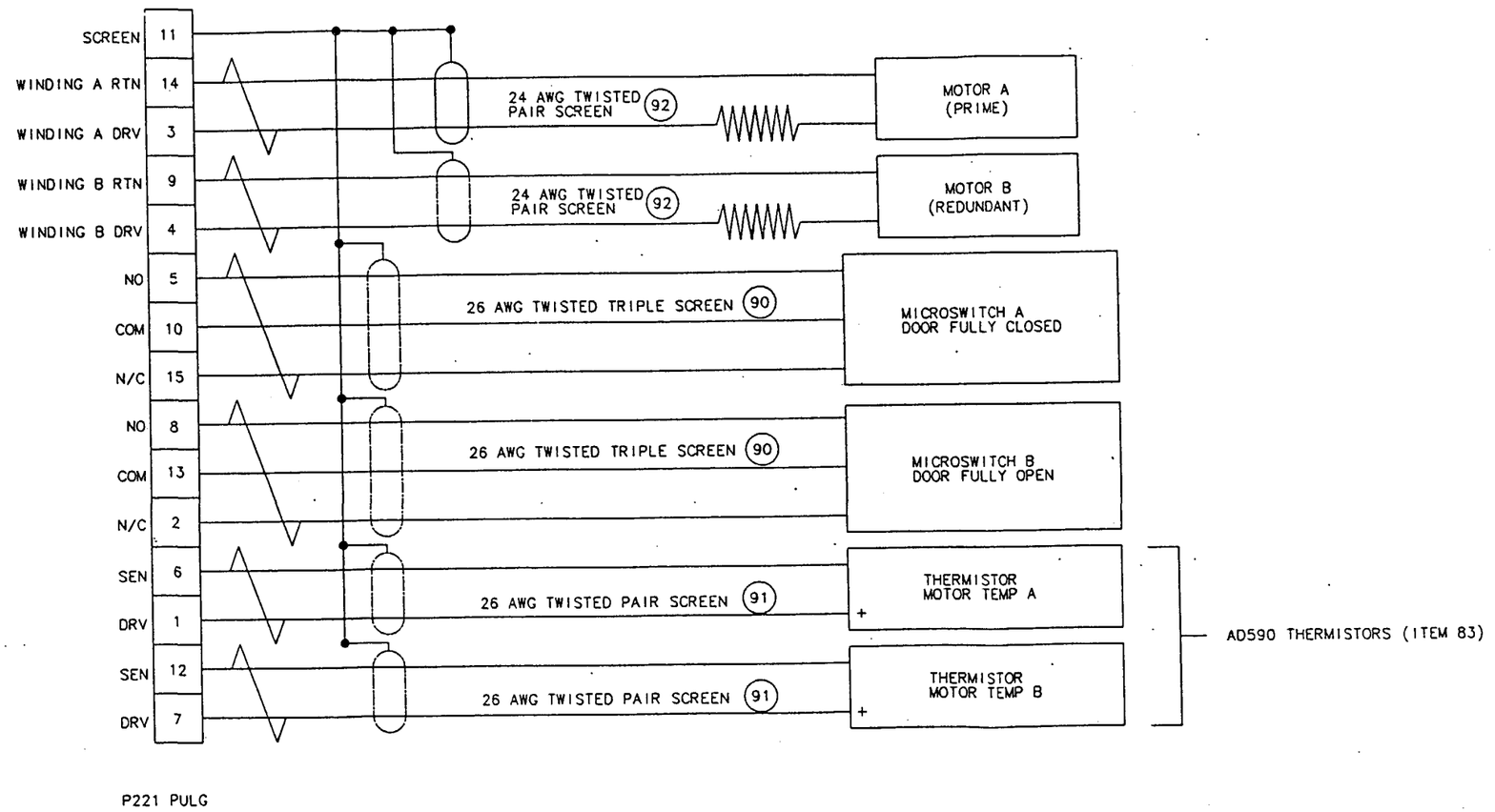

WIRING DIAGRAM

02	SIAA-00297
01	HRA80010
ISSUE	E.C.O. NUMBER
FOR DETAILS OF CHANGE AND SIGNATURES SEE E.C.O.	
DRAWN	M. BALLBRIDGE
DATE	04-05-99

MATRA MARCONI SPACE

TITLE SPACE VIEW ALBEDO ASSEMBLY

SECURITY CLASSIFICATION

HR2L040

SHT 03 OF 03

SERVICE DRAWING NUMBER DW-MMS-267

~~SEE ASSOCIATED BILL OF MATERIAL~~

ORIGINAL SCALE 1:1

UNLESS OTHERWISE STATED STANDARD MANUFACTURING REQUIREMENTS TO ARE MANDATORY

UNLESS OTHERWISE STATED UNIT OF MEASUREMENT: MILLIMETRES

MATERIAL	FORM	PROTECTIVE FINISH
-	- SPEC. -	- SPEC. -

THIS PART MUST BE WEIGHED AND THE WEIGHT RECORDED IN ACCORDANCE WITH EP55

SPACECRAFT COMPONENT

STANDARD OF FINISH IMPORTANT
HANDLE AND STORE WITH EXTREME CARE

MATRA MARCONI SPACE UK LIMITED OWNS THE COPYRIGHT OF THIS DOCUMENT WHICH IS SUPPLIED IN CONFIDENCE AND WHICH SHALL NOT BE USED FOR ANY PURPOSE OTHER THAN THAT FOR WHICH IT IS SUPPLIED AND SHALL NOT IN WHOLE OR IN PART BE REPRODUCED OR COPIED OR COMMUNICATED TO ANY PERSON WITHOUT WRITTEN PERMISSION FROM THE OWNER © MATRA MARCONI SPACE UK LIMITED 1998

SC.5533

SECTION 2

Major Component and Sub-Assembly Drawings

SERVICE DRAWING NUMBER-SHEET NO. ——— | 3rd ANGLE PROJECTION

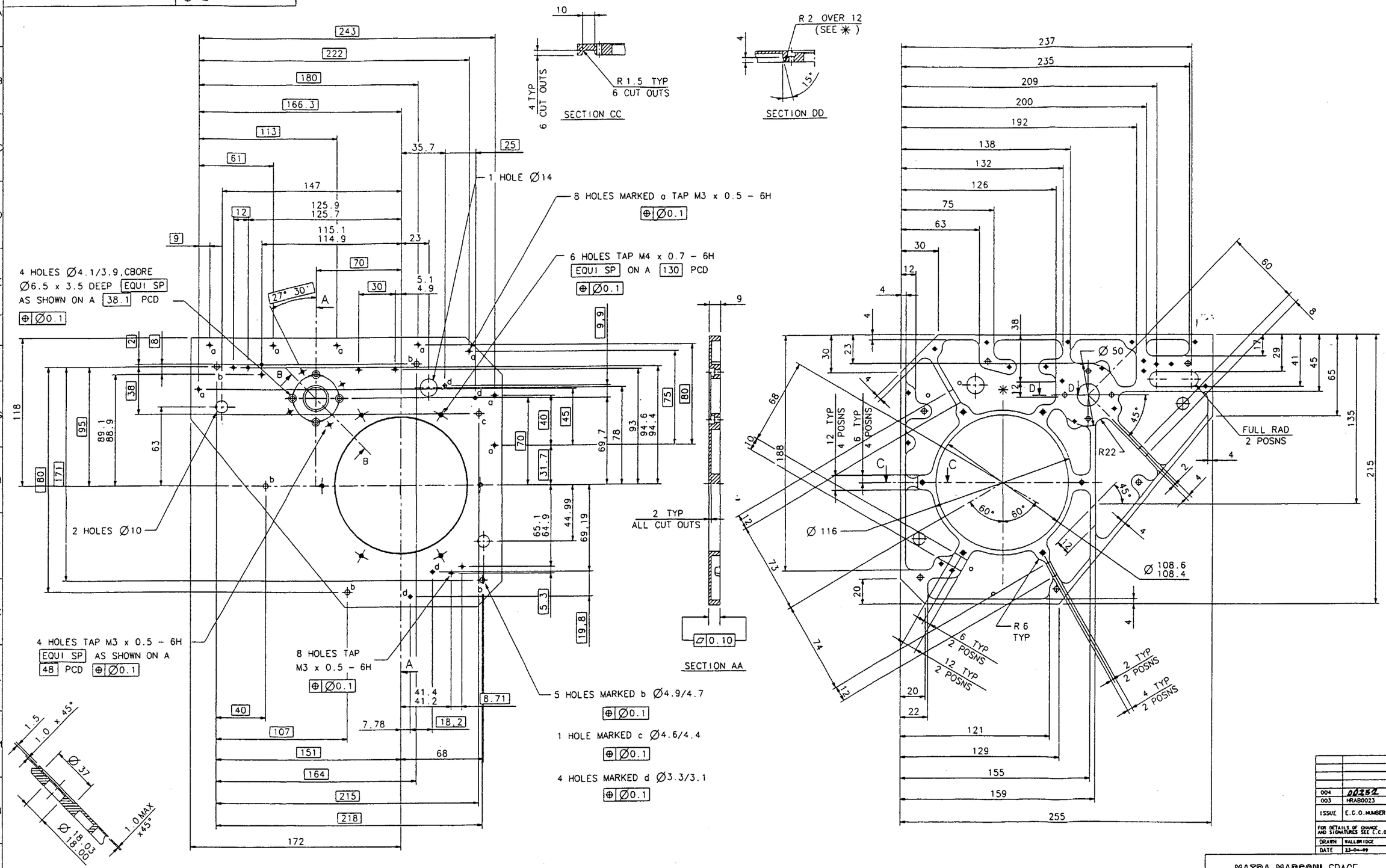

NOTES

1 CLEANLINESS STANDARD TO PS2058 GRADE 2X

2.ALL FILLET RADII TO BE 0.5

3.ALL CORNER RADII TO BE 6,UNLESS OTHERWISE STATED

~~SEE ASSOCIATED BILL OF MATERIAL~~	ORIGINAL SCALE 1:1	
UNLESS OTHERWISE STATED STANDARD MANUFACTURING REQUIREMENTS TO DS700 ARE MANDATORY	UNLESS OTHERWISE STATED UNIT OF MEASUREMENT: MILLIMETRES	
MATERIAL	FORM	PROTECTIVE FINISH
AL.ALLOY	PLATE SPEC. L93 T651	ALODOW 1200 SPEC. PS2068

THIS PART MUST BE WEIGHED AND THE WEIGHT RECORDED IN ACCORDANCE WITH EP55

SPACECRAFT COMPONENT

STANDARD OF FINISH IMPORTANT
HANDLE AND STORE WITH EXTREME CARE

MATRA MARCONI SPACE UK LIMITED OWNS THE COPYRIGHT OF THIS DOCUMENT WHICH IS SUPPLIED IN CONFIDENCE AND WHICH SHALL NOT BE USED FOR ANY PURPOSE OTHER THAN THAT FOR WHICH IT IS SUPPLIED AND SHALL NOT IN WHOLE OR IN PART BE REPRODUCED OR COPIED OR COMMUNICATED TO ANY PERSON WITHOUT WRITTEN PERMISSION FROM THE OWNER © MATRA MARCONI SPACE UK LIMITED 1998

004	00252
003	HRAB0023
ISSUE	E.C.O. NUMBER
FOR DETAILS OF CHANGE AND SIGNATURES SEE E.C.O.	
DRAWN	WALLBRIDGE
DATE	23-04-99

127
ES 601

MATRA MARCONI SPACE

TITLE +Y PANEL MOUNTING PLATE

SECURITY CLASSIFICATION

SHT 01 OF 01

HR2L008

SERVICE DRAWING NUMBER ———

A0

SC.5533

SERVICE DRAWING NUMBER/SHEET NO. ———

3rd ANGLE PROJECTION

NOTES

1 CLEANLINESS STANDARD TO PS2058 GRADE 2X
2 ALL UNSPECIFIED FILLET RADII TO BE 0.5 MAX
3 HARD ANODISE TO PS2107 AREA INDICATED THUS:

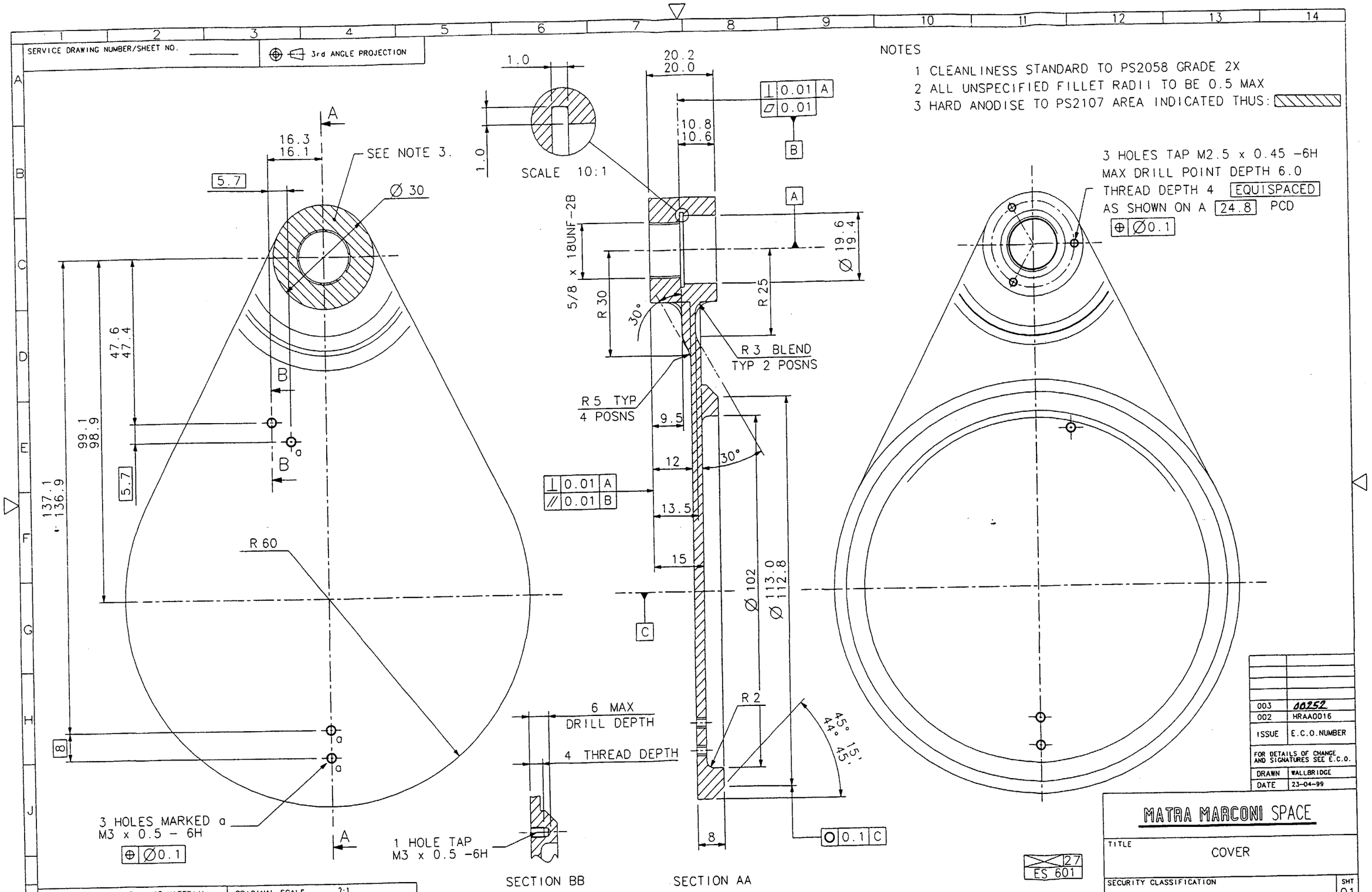

003	00252
002	HRAA0016
ISSUE	E.C.O.NUMBER
FOR DETAILS OF CHANGE AND SIGNATURES SEE E.C.O.	
DRAWN	WALLBRIDGE
DATE	23-04-99

MATRA MARCONI SPACE

TITLE COVER

SECURITY CLASSIFICATION

SHT 01 OF 01

HR2L009

SERVICE DRAWING NUMBER ———

A 1

~~SEE ASSOCIATED BILL OF MATERIAL~~

UNLESS OTHERWISE STATED STANDARD MANUFACTURING REQUIREMENTS TO DS700 ARE MANDATORY

ORIGINAL SCALE 2:1

UNLESS OTHERWISE STATED UNIT OF MEASUREMENT: MILLIMETRES

MATERIAL	FORM	PROTECTIVE FINISH
AL ALLOY	PLATE	ALOCROM 1200
	SPEC. L165 T6	SPEC. PS2068

THIS PART MUST BE WEIGHED AND THE WEIGHT RECORDED IN ACCORDANCE WITH EP55

SPACECRAFT COMPONENT

STANDARD OF FINISH IMPORTANT
HANDLE AND STORE WITH EXTREME CARE

MATRA MARCONI SPACE UK LIMITED OWNS THE COPYRIGHT OF THIS DOCUMENT WHICH IS SUPPLIED IN CONFIDENCE AND WHICH SHALL NOT BE USED FOR ANY PURPOSE OTHER THAN THAT FOR WHICH IT IS SUPPLIED AND SHALL NOT IN WHOLE OR IN PART BE REPRODUCED OR COPIED OR COMMUNICATED TO ANY PERSON WITHOUT WRITTEN PERMISSON FROM THE OWNER © MATRA MARCONI SPACE UK LIMITED 1996

SC.5534

SERVICE DRAWING NUMBER/SHEET NO. ——

3rd ANGLE PROJECTION

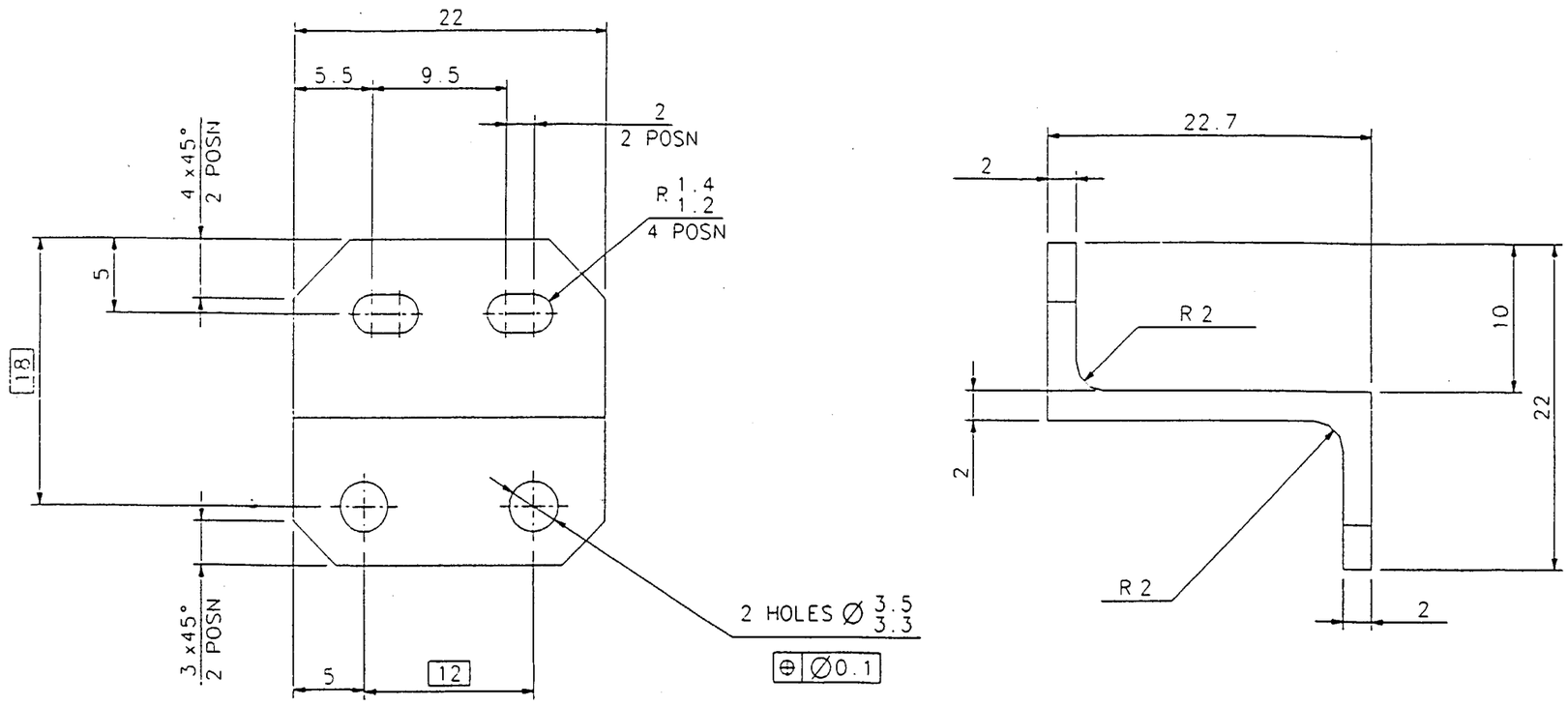

THERMAL	R.J.MOSS
P.A.	C.BURROWS
P.E.D.	RD GRIFFIN
DESIGN	RTS COUPE
STRESS	M.A.BRAY
CHECKED	R.WEST
DRAWN	M.ROSS
CP/QF	–
RIC	HRAB0002
DATE	21/04/98
ISSUE	001

NOTES:-
1. CLEANLINESS STANDARD PS2058 GRADE 2X

27
ES 601

MATRA MARCONI SPACE

TITLE
MOUNTING BRACKET
(MICROSWITCH)

SECURITY CLASSIFICATION

SHT 01 OF 01

HR2L010

SERVICE DRAWING NUMBER ——

A1

~~SEE ASSOCIATED PART OF MATERIAL~~	ORIGINAL SCALE 5:1	
UNLESS OTHERWISE STATED STANDARD MANUFACTURING REQUIREMENTS TO DS700 ARE MANDATORY	UNLESS OTHERWISE STATED UNIT OF MEASUREMENT: MILLIMETRES	
MATERIAL	FORM	PROTECTIVE FINISH
AL. ALLOY	BAR SPEC. L111	ALOCROM 1200 SPEC. PS2068

THIS PART MUST BE WEIGHED AND THE WEIGHT RECORDED IN ACCORDANCE WITH EP55

SPACECRAFT COMPONENT

STANDARD OF FINISH IMPORTANT
HANDLE AND STORE WITH EXTREME CARE

MATRA MARCONI SPACE UK LIMITED OWNS THE COPYRIGHT OF THIS DOCUMENT WHICH IS SUPPLIED IN CONFIDENCE AND WHICH SHALL NOT BE USED FOR ANY PURPOSE OTHER THAN THAT FOR WHICH IT IS SUPPLIED AND SHALL NOT IN WHOLE OR IN PART BE REPRODUCED OR COPIED OR COMMUNICATED TO ANY PERSON WITHOUT WRITTEN PERMISSON FROM THE OWNER © MATRA MARCONI SPACE UK LIMITED 1996

SC.5534

SERVICE DRAWING NUMBER/SHEET NO ——

3rd ANGLE PROJECTION

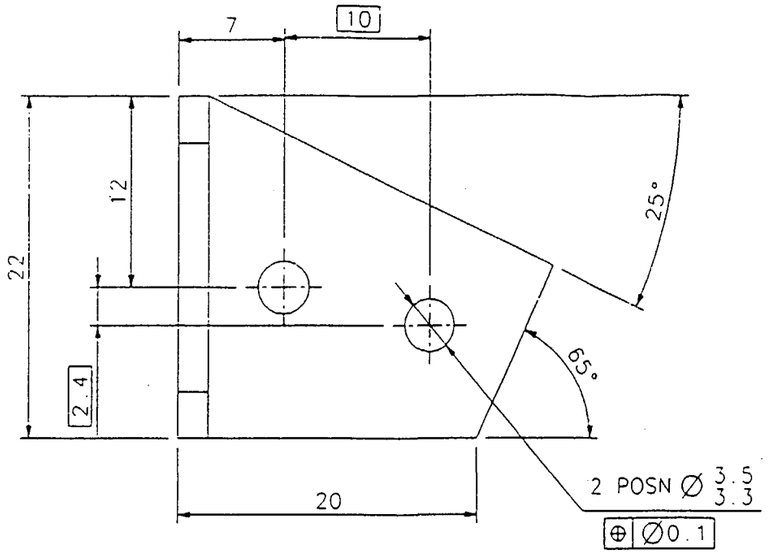

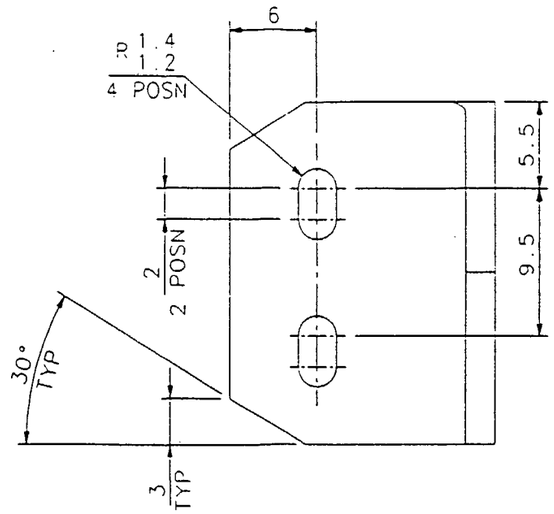

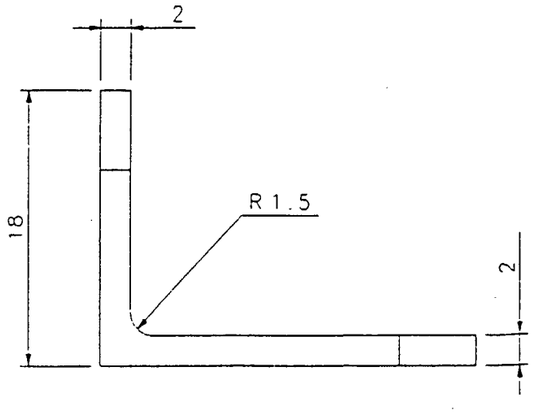

NOTES:-
1. CLEANLINESS STANDARD PS2058 GRADE 2X

THERMAL	MJ MOSS
P.A.	C. BURROWS
P.E.O.	RD GRIFFIN
DESIGN	RTS COUPE
STRESS	MA BRAY
CHECKED	R. WEST
DRAWN	M. ROSS
CP/OF	–
RIC	HRAB0002
DATE	21/04/98
ISSUE	001

MATRA MARCONI SPACE

TITLE
MOUNTING BRACKET
(MICROSWITCH)

SECURITY CLASSIFICATION

SHT 01 OF 01

HR2L011

SERVICE DRAWING NUMBER ——

DOQ 10 A1

27
ES 601

~~SEE ASSOCIATED BILL OF MATERIAL~~

ORIGINAL SCALE 5:1

UNLESS OTHERWISE STATED STANDARD MANUFACTURING REQUIREMENTS TO DS700 ARE MANDATORY

UNLESS OTHERWISE STATED UNIT OF MEASUREMENT: MILLIMETRES

MATERIAL	FORM	PROTECTIVE FINISH
AL. ALLOY	BAR SPEC. L111	ALOCROM 1200 SPEC. PS2068

THIS PART MUST BE WEIGHED AND THE WEIGHT RECORDED IN ACCORDANCE WITH EP55

SPACECRAFT COMPONENT

STANDARD OF FINISH IMPORTANT
HANDLE AND STORE WITH EXTREME CARE

MATRA MARCONI SPACE UK LIMITED OWNS THE COPYRIGHT OF THIS DOCUMENT WHICH IS SUPPLIED IN CONFIDENCE AND WHICH SHALL NOT BE USED FOR ANY PURPOSE OTHER THAN THAT FOR WHICH IT IS SUPPLIED AND SHALL NOT IN WHOLE OR IN PART BE REPRODUCED OR COPIED OR COMMUNICATED TO ANY PERSON WITHOUT WRITTEN PERMISSON FROM THE OWNER © MATRA MARCONI SPACE UK LIMITED 1996

SC.5534

SERVICE DRAWING NUMBER/SHEET NO. ——

3-vi ANGLE PROJECTION

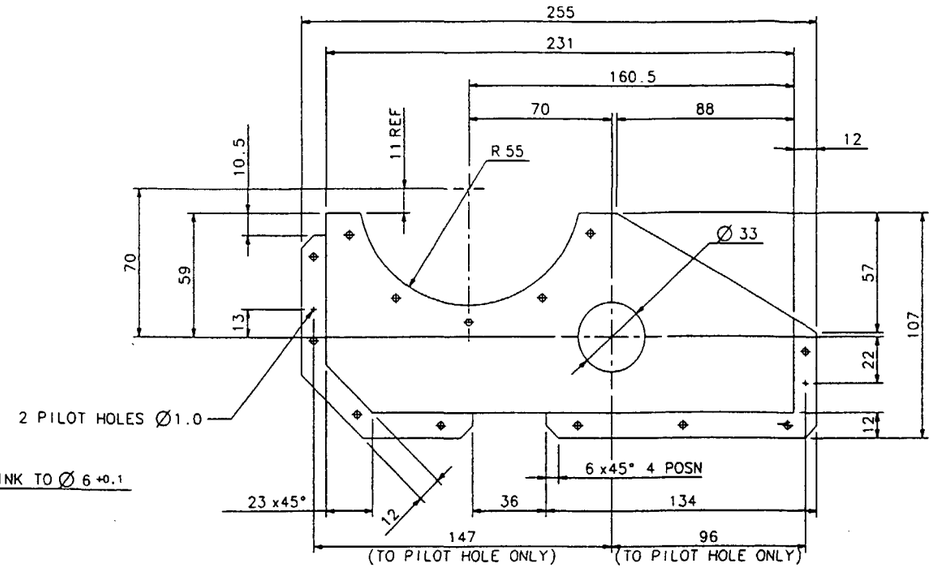

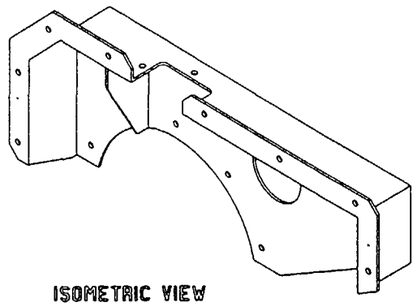

ISOMETRIC VIEW

NOTES:-
1. CLEANLINESS STANDARD PS2058 GRADE 2X
2. ALL UNSPECIFIED FILLET RADII TO BE 1.0 MAX

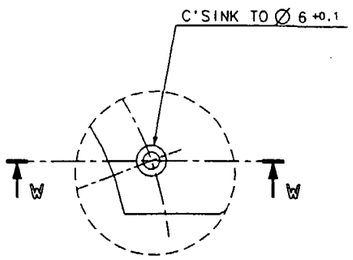

DETAIL 'X'

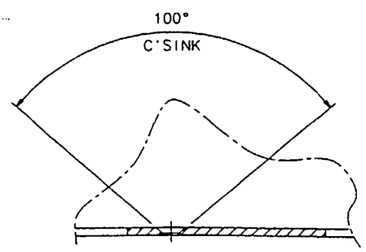

PART SECTION W-W

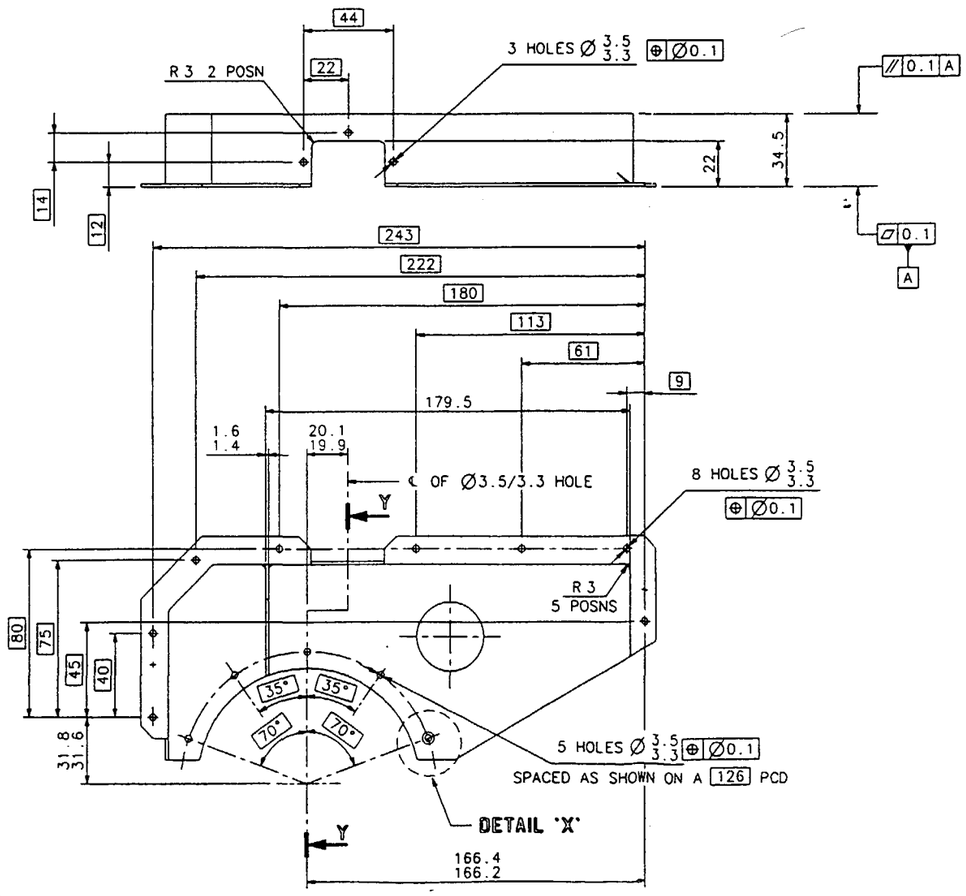

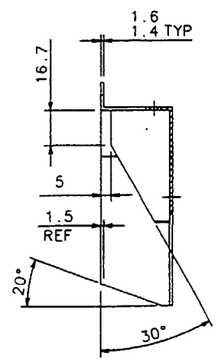

SECTION YY

127
ES 601

003	00282
002	HRAB0015
ISSUE	E.C.O. NUMBER
FOR DETAILS OF CHANGE AND SIGNATURES SEE E.C.O.	
DRAWN	WALLBRIDGE
DATE	23-04-99

MATRA MARCONI SPACE

TITLE
MOUNTING BRACKET
(ALBEDO SHIELD)

SECURITY CLASSIFICATION

SHT 01 OF 01

HR2L035

SERVICE DRAWING NUMBER ——

A0

~~SEE ASSOCIATED BILL OF MATERIAL~~	ORIGINAL SCALE 1:1	
UNLESS OTHERWISE STATED STANDARD MANUFACTURING REQUIREMENTS TO DS700 ARE MANDATORY	UNLESS OTHERWISE STATED UNIT OF MEASUREMENT: MILLIMETRES	
MATERIAL	FORM	PROTECTIVE FINISH
AL ALLOY	BAR SPEC. L115 T651	ALOCROM 1200 SPEC. PS2068

THIS PART MUST BE WEIGHED AND THE WEIGHT RECORDED IN ACCORDANCE WITH EP55

SPACECRAFT COMPONENT

STANDARD OF FINISH IMPORTANT
HANDLE AND STORE WITH EXTREME CARE

MATRA MARCONI SPACE UK LIMITED OWNS THE COPYRIGHT OF THIS DOCUMENT WHICH IS SUPPLIED IN CONFIDENCE AND WHICH SHALL NOT BE USED FOR ANY PURPOSE OTHER THAN THAT FOR WHICH IT IS SUPPLIED AND SHALL NOT IN WHOLE OR IN PART BE REPRODUCED OR COPIED OR COMMUNICATED TO ANY PERSON WITHOUT WRITTEN PERMISSION FROM THE OWNER © MATRA MARCONI SPACE UK LIMITED 1998

SC.5533

SERVICE DRAWING NUMBER/SHEET NO

3rd ANGLE PROJECTION

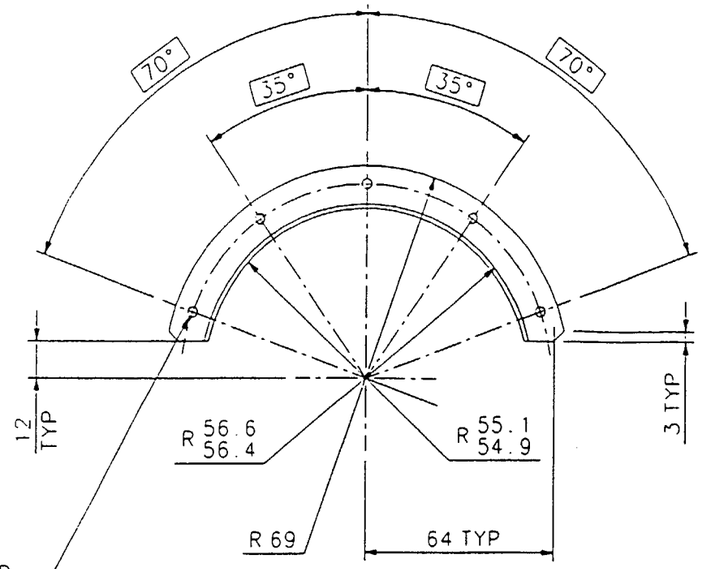

5 HOLES ∅3.5/3.3 SPACED
AS SHOWN ON A [126] PCD

⊕ | ∅0.1

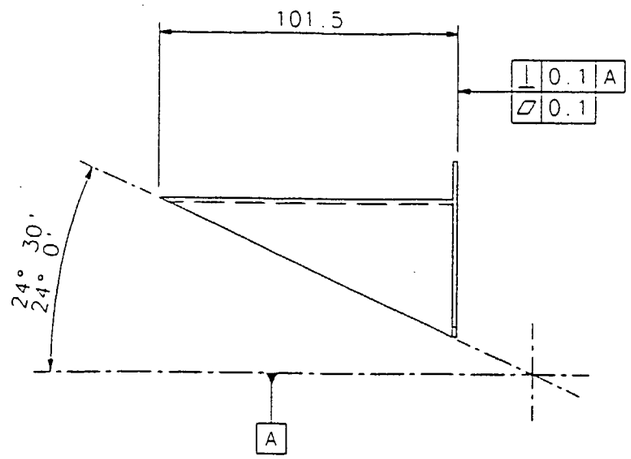

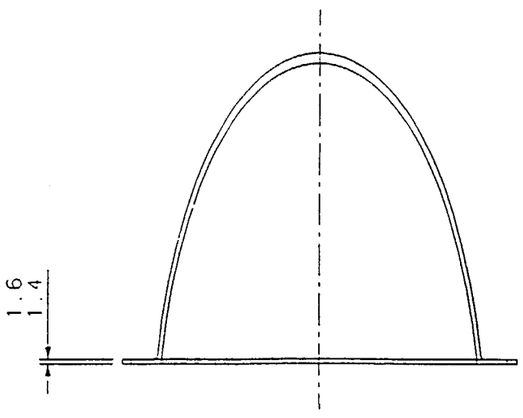

NOTE

1. CLEANLINESS STANDARD TO PS2058 GRADE 2X
2. ALL UNSPECIFIED FILLET RADII TO 1.0

THERMAL	RJ.MOSS
P.A.	JD.MILLET
P.E.D.	RD.GRIFFIN
DESIGN	RTS.COUPE
STRESS	MA.BRAY
CHECKED	R.WEST
DRAWN	R.WEST
CP/OF	–
RIC	HRAB0015
DATE	22/05/98
ISSUE	002

MATRA MARCONI SPACE

TITLE
ALBEDO SHIELD

27
ES 601

~~SEE ASSOCIATED BILL OF MATERIAL~~

ORIGINAL SCALE 1:1

UNLESS OTHERWISE STATED STANDARD MANUFACTURING REQUIREMENTS TO ARE MANDATORY

UNLESS OTHERWISE STATED UNIT OF MEASUREMENT: MILLIMETRES

MATERIAL	FORM	PROTECTIVE FINISH
AL.ALLOY	BAR SPEC. L111 T651	ALOCROM 1200 SPEC. PS2068

THIS PART MUST BE WEIGHED AND THE WEIGHT RECORDED IN ACCORDANCE WITH EP55

SPACECRAFT COMPONENT

STANDARD OF FINISH IMPORTANT
HANDLE AND STORE WITH EXTREME CARE

MATRA MARCONI SPACE UK LIMITED OWNS THE COPYRIGHT OF THIS DOCUMENT WHICH IS SUPPLIED IN CONFIDENCE AND WHICH SHALL NOT BE USED FOR ANY PURPOSE OTHER THAN THAT FOR WHICH IT IS SUPPLIED AND SHALL NOT IN WHOLE OR IN PART BE REPRODUCED OR COPIED OR COMMUNICATED TO ANY PERSON WITHOUT WRITTEN PERMISSION FROM THE OWNER © MATRA MARCONI SPACE UK LIMITED 1996

SECURITY CLASSIFICATION

HR2L036

SHT 01 OF 01

SERVICE DRAWING NUMBER

DOC. ID A 1

SC.5534

SECTION 2

Declared Materials List PL-MMS-211

HIRDLS

PL-MMS-211
(3164-18002-LIM)
Issue 3

HIGH RESOLUTION DYNAMICS LIMB SOUNDER

Originator: R McKay Date: 17 February 2000

Subject/Title: **DECLARED MATERIALS LIST**

Description/Summary/Contents:

A list of all materials incorporated into the HIRDLS equipment.

Keywords: STH, SSH, FM, Materials

Purpose of this Document:

Reviewed/Approved by:			
Date (yy-mm-dd):	00-02-17		

Matra Marconi Space
Anchorage Road
Portsmouth
Hampshire PO3 5PU
England

EOS

ORIGINAL WHEN RED

HIRDLS
DECLARED MATERIALS LIST
PL-MMS-211

Responsible Engineer: N Grossland Date: 17 Feb 2000

Quality Assurance: G. Brewster Date: 17th Feb 2000

Project Manager: I.K. Stewart Date: 17/Feb/00

IK STEWART

© MATRA MARCONI SPACE UK LIMITED

THE COPYRIGHT IN THIS DOCUMENT IS THE PROPERTY OF MATRA MARCONI SPACE UK LIMITED. This document is supplied by Matra Marconi Space UK Limited on the express terms that it is to be treated as confidential and that it may not be copied, used or disclosed to others for any purpose except as expressly authorised under the terms of Contract No N2A 3R 0386.

Any person, other than the authorised holder, who finds or otherwise obtains possession of the document, should post it, together with his/her name and address, to the Registry, Matra Marconi Space UK Limited, Anchorage Road, Portsmouth, England, PO3 5PU. Postage will be refunded.

CONTENTS

1.0 INTRODUCTION

2.0 TABULATION EXPLANATION

3.0 MATERIALS LISTS

1.0 SCOPE

This document contains a list of materials used by MMS on HIRDLS.

2.0 TABULATION EXPLANATION

A ten column table defines the information. The columns are follows:

Column 1: **ITEM NUMBER:**
An arbitrary number specific to each material. The materials appear in 20 groups described below.

GROUP NUMBER	MATERIAL TYPE
1	ALUMINIUM ALLOYS
2	COPPER ALLOYS
3	NICKEL ALLOYS
4	TITANIUM ALLOYS
5	STEELS
6	STAINLESS STEELS
7	FILLER METALS
8	MISCELLANEOUS METALS
9	OPTICAL MATERIALS
10	ADHESIVES, COATINGS, VARNISHES
11	ADHESIVE TAPES
12	PAINTS/INKS
13	LUBRICANTS
14	POTTING COMPOUNDS, SEALANTS, FOAMS
15	REINFORCED PLASTICS
16	RUBBERS/ELASTOMERS
17	THERMOPLASTICS
18	THERMOSET PLASTICS
19	WIRES/CABLES
20	MISC' NON-METALS

Column 2: **COMMERCIAL IDENTIFICATION:**
The unique description of the material e.g., manufacturers trade name or other distinct material definition.

Column 3: **CHEMICAL NATURE** etc.:
The chemical nature, composition, form or heat treatment condition of the material.

Column 4: **PROCUREMENT INFORMATION:**
The name of the manufacturer and/or vendor together with the procurement specification, which is either an international requirement standard or a company specific control document.

Column 5: **PROCESS PARAMETERS:**
The details required to define the process parameters e.g. adhesive mix and cure details, plating thickness', special cleaning procedures.

Column 6: **USAGE AND LOCATION:**
The specific application of the material and the equipment it is used on.

Column 7: **ENVIRONMENT CODES:**

A code describing:
R = Radiation
A = Ambience (Pressurisation)
T = Temperature

RADIATION/UV/ATOX (R)		AMBIENCE (A)	TEMPERATURE (T)
G = Geostationary L = Low orbit B = Radiation belts I = Interplanetary	S = Outside in shadow L = Outside in light	V = Vacuum H = Hermetic M = Manned E = Elevated pressure	T1 = 0 to 100 K T2 = 100 to 200 K T3 = 200 to 300 K T4 = 300 to 400 K

Notes:
1) For materials inside the spacecraft a letter is used from the left-hand column. For materials on the surface of the spacecraft, this is combined with the letter "L" or "S".
2) The thermal environment can be indicated by two values. e.g. T2/4

Column 8: **SIZE CODE** :
An assessment of the amount of material used based on the following tabulation..

MASS (g)
W0 = 0 < 1
W1 = 1 < 10
W2 = 10 < 100
W3 = 100 < 1000

Column 9.1: **OUTGASSING, OFFGASSING & FLAMMABILITY**

P: Material passed testing.

F: Material failed testing.

U: Unknown properties.

NA: Not applicable to this material group.

STRESS CORROSION CRACKING RATING:

A: High resistance.

B: Medium or Low resistance.

U: Unknown resistance

CORROSION RATING:

A: Does not require supplementary coating.

B: Requires supplementary coating.

U: Unknown properties.

NA: Not applicable to this material group.

Column 9.2 **JUSTIFICATION FOR APPROVAL:**

Either qualification plans or previous space programmes.

Column 9.3 **STATUS:**
To identify the qualification status of the material a letter code is selected from the following table:

STATUS	
A	Approved
W	Waiver required
Q	Under qualification
O	Open, subject to investigation
D	Deleted

Column 10 **CUSTOMER APPROVAL:**
This column is to be completed by the customer.

Declared Materials List

GROUP 1 : ALUMINIUM AND ALLOYS

1	2	3	4	5	6	7			8	9							10
										9.1					9.2	9.3	
Item No.	Commercial Identification	Chemical Nature and Product Type	Procurement, Manufacturer / Supplier, Specification and Issue.	Summary of Processing Parameters	Use and Location	Environmental Codes R	A	T	Size Code	Corr	SCC	Flam	OFFG	OUTG	Justification for Approval	Contractors App.	Cust. App.
01	5052 Al	Chromated Al alloy honeycomb	02-LC0027	S-3-04-037	Sandwich panel	L	V	3-4	W2	B	A	NA	NA	NA	Qual report 3116-YF002-RPT	A	
02	Wrought aluminium alloy bars, extrusions and forgings	Al, Si (1%), Mg, Mn alloy 6082 to BS L 111 T651	02-LC0003 Various Suppliers	Machined and Alocromed S-4-01-007 PS 2068 PS2058 Anodise to PS 2107	Small formed parts.	L	V	3-4	W2	A	A	NA	NA	NA	Olympus, Hotbird, Hispasat, ERS-2 IEU	A	
03	Aluminium alloy sheet strip and plate 6082	Mg 0.5%, Si 0.7%, Mn 0.4% plate to BS 1115 sheet and strip to BS 1113	01-LC0001 Various Suppliers	Machined and Alocromed S-4-01-007 PS 2068 PS 2058 Anodise to PS 2110	Small structural items	L	V	3-4	W2	B	A	NA	NA	NA	Hotbird, Skynet, ERS-1, ERS-2 IEU, Hispasat	A	
04	7075 Al alloy forging	T7351	02-LC0003	Alocrom S-4-01-007	Base-plate insert	L	V	3-4	W2	B	B	NA	NA	NA	3158-26001-RPZ	A	
05	1200 Al alloy	H14 strip	01-LC0006	S-04-02-020	Grounding	L	V	3-4	W1	A	A	NA	NA	NA	Inmarsat 3 hotbird	A	
06	Fotofoil label	Anodised Al alloy 1100	01-LC0024	S-4-07-021 S-4-02-053	Ident labels	L	V	3-4	W1	NA	NA	NA	NA	NA	Inmarsat 3 Koreasat	A	
07																D	
08																D	
09	Tyrap base TC 105	Aluminium alloy to QQ-A-250 3003 Al 99% Mn 1% H14	25-LC0033 Thomas and Betts	Alocrom S-4-01-007 Bonded with Scotchweld S-4-02-053	Harness location	L	V	3-4	W1	A	A	NA	NA	NA	Inmarsat III, Skynet, ASAR, Hotbird	A	
10	Al alloy insert	7075, T7351, anodised	Shurlock	Pot with item 14-01	Panel assy	L	V	3-4	W2	A	A	NA	NA	NA	Hotbird Koreasat	A	

Declared Materials List

GROUP 1 : ALUMINIUM AND ALLOYS

1	2	3	4	5	6	7			8	9							10
										9.1					9.2	9.3	
Item No.	Commercial Identification	Chemical Nature and Product Type	Procurement, Manufacturer / Supplier, Specification and Issue.	Summary of Processing Parameters	Use and Location	Environmental Codes R	A	T	Size Code	Corr	SCC	Flam	OFFG	OUTG	Justification for Approval	Contractors App.	Cust. App.
11	Aluminium snaphead rivet	Al 2.5% Cu 0.3%Mg	25-LC0047, BS SP 77	Anodised, as supplied	Integration	L	V	3-4	W1	A	B	NA	NA	NA	AATSR MHS	A	
12	Aluminium alloy,wrought, L168	4 Cu Al	BS L 168 (2014 A, T6)	Alocrom PS 2068 or Black anodised PS 2107	Small machined parts	L	V	3-4	W2	A	C	NA	NA	NA	GOMOS	A	

Declared Materials List

GROUP 2 : COPPER AND ALLOYS

1	2	3	4	5	6	7			8	9							10
										9.1					9.2	9.3	
Item No.	Commercial Identification	Chemical Nature and Product Type	Procurement, Manufacturer / Supplier, Specification and Issue.	Summary of Processing Parameters	Use and Location	Environmental Codes R	A	T	Size Code	Corr	SCC	Flam	OFFG	OUTG	Justification for Approval	Contractors App.	Cust. App.
01	Aluminium bronze	Cu, Al 10%, Ni 5%, Fe 5%	DTD 197 (BS EN CW 307g)	Machined	Bearing	L	V	3-4	W1	A	B	NA	NA	NA	GOMOS	A	
02	Beryllium copper alloy	2% Be, CB 101, half hard	01-LC0012 Goodfellows Telcon	No finish	Spring contact	L	V	3-4	W1	A	A	NA	NA	NA	Silex	A	

Declared Materials List

GROUP 1 : NICKEL AND ALLOYS

1	2	3	4	5	6	7			8	9							10
										9.1					9.2	9.3	
Item No.	Commercial Identification	Chemical Nature and Product Type	Procurement, Manufacturer / Supplier, Specification and Issue.	Summary of Processing Parameters	Use and Location	Environmental Codes R	A	T	Size Code	Corr	SCC	Flam	OFFG	OUTG	Justification for Approval	Contractors App.	Cust. App.
01	Ring terminal, Solistrand, Stratotherm	Pure nickel	25-LC0042	Crimping of ring terminal to MLI grounding wire	MLI grounding	L	V	3-4	W1	A	A	NA	NA	NA	SOHO Silex	A	

Declared Materials List

GROUP 4 : TITANIUM AND TITANIUM ALLOYS

1	2	3	4	5	6	7			8	9							10
										9.1					9.2	9.3	
Item No.	Commercial Identification	Chemical Nature and Product Type	Procurement, Manufacturer / Supplier, Specification and Issue.	Summary of Processing Parameters	Use and Location	Environmental Codes R	A	T	Size Code	Corr	SCC	Flam	OFFG	OUTG	Justification for Approval	Contractors App.	Cust. App.
01	Titanium alloy	Ti6AL4V bar	BS TA11 BS TA28 BS TA56	DTD942, anodising PS 2051, application of Molykote 106	Structural parts, inserts, fasteners	L	V	3-4	W3	A	A	NA	NA	NA	Skynet ASAR	A	
02	Titanium alloy metric screws with torx socket head sizes M3 and greater	Ti, 6% Al, 4% V, BS 2TA 28 heads to BS A101 anodised to DTD 942	25-LC0068 Various Suppliers	Torquing S-3-04-012 Fillet locking S-3-02-051	Mechanical fastening. Payload integration	L	V	3-4	W1	A	A	NA	NA	NA	Skynet, Telecom 2, Hispasat, Inmarsat III, Silex, Hotbird, ASAR	A	

Declared Materials List

GROUP 6 : STAINLESS STEELS

1	2	3	4	5	6	7			8	9							10
										9.1					9.2	9.3	
Item No.	Commercial Identification	Chemical Nature and Product Type	Procurement, Manufacturer / Supplier, Specification and Issue.	Summary of Processing Parameters	Use and Location	Environmental Codes R	A	T	Size Code	Corr	SCC	Flam	OFFG	OUTG	Justification for Approval	Contractors App.	Cust. App.
01																D	
02	Helicoil insert		25-LC0012 Armstrong Fastening Ltd WTI Fasteners	Installation S-3-04-052	Wire thread insert	L	V	3-4	W2	A	A	NA	NA	NA	Skynet, Hotbird Plus, Inmarsat III,	A	
03	Stainless steel washers	18% Cr, 8% Ni, Fe BS 970.1 BS 4320 AISI 304 or 321	25-LC0006 Various Suppliers	Torquing S-3-04-012 Fillet locking S-3-02-051	Mechanical fastening. Payload integration	L	V	3-4	W1	A	A	NA	NA	NA	Skynet, Hotbird Plus, Inmarsat III,	A	
04	Isometric stainless steel nuts	18% Cr, 8% Ni, Fe, BS 6105 GRADE A2-70 AISI 304 or 321	25-LC0007 Various Suppliers	Torquing S-3-04-012 Fillet locking S-3-02-051	Mechanical fastening. Payload integration	L	V	3-4	W1	A	A	NA	NA	NA	Skynet, Hotbird Plus, Inmarsat III,	A	
05	Stainless Steel wire	18% Cr, 8% Ni, Fe 316 S11	03-LC0017	Locking		L	V	3-4	W1	A	A	NA	NA	NA	Skynet, Hotbird Plus, Inmarsat III	A	
06	Stainless steel bar	18% Cr, 8% Ni, Fe 321 S20	AISI 321 S20	No finish	Earthing stud MLI	L	V	3-4	W1	A	A	NA	NA	NA	PPF	A	
07	Stainless steel washer	18% Cr, 8% Ni, Fe 303 S31	02-LC0006	No finish	Grounding MLI	L	V	3-4	W1	A	A	NA	NA	NA	Skynet, Hotbird Plus, Inmarsat III	A	
08	Stainless steel dowel pin	18% Cr, 8% Ni, Fe 321 S20	BS 1804/2/1	No finish	Integration	L	V	3-4	W1	A	A	NA	NA	NA	ASAR	A	
09	Stainless steel crinkle washer	18% Cr, 8% Ni, Fe	DIN 17440 BS4463	No finish	Integration	L	V	3-4	W1	A	A	NA	NA	NA	GOMOS	A	
10	Stainless steel bar	18% Cr, 8% Ni, Fe	BS S80	No finish	Small mech parts	L	V	3-4	W2	A	A	NA	NA	NA	GOMOS	A	
11	Stainless steel wire	18% Cr, 8% Ni, Fe 302 S26	BS 2056	Acid cleaned PS 2089 Molykote 106 PS 2051	Spring	L	V	3-4	W1	A	A	NA	NA	NA	GOMOS	A	

Declared Materials List

GROUP 7 : FILLER METALS AND SOLDERS

1	2	3	4	5	6	7			8	9							10
										9.1					9.2	9.3	
Item No.	Commercial Identification	Chemical Nature and Product Type	Procurement, Manufacturer / Supplier, Specification and Issue.	Summary of Processing Parameters	Use and Location	Environmental Codes R	A	T	Size Code	Corr	SCC	Flam	OFFG	OUTG	Justification for Approval	Contractors App.	Cust. App.
01	Sn/Pb LOW MELTING POINT ROSIN CORED SOLDER WIRE	63% Sn, 37% Pb, ESA PSS-01-708/1 S14	09-LC0004	Soldering of silver surfaces ESA PSS-01-708 S-4-03-003	Payload integration	L	V	3-4	W0	A	A	NA	NA	NA	ERS-1, Telecom2, Hispasat, Eutelsat, Hotbird,	A	

Declared Materials List

GROUP 9 :GLASSES

1	2	3	4	5	6	7			8	9							10
										9.1					9.2	9.3	
Item No.	Commercial Identification	Chemical Nature and Product Type	Procurement, Manufacturer / Supplier, Specification and Issue.	Summary of Processing Parameters	Use and Location	Environmental Codes R	A	T	Size Code	Corr	SCC	Flam	OFFG	OUTG	Justification for Approval	Contractors App.	Cust. App.
01	Optic cube	Glass, vacuum metallised with chromium	05-LC0054 Pilkington	Bonded in place with items 10-07/8.	Alignment, redundant after test but remain in place	L	V	3-4	W1	NA	NA	NA	NA	NA	Skynet MHS ASAR	A	

Declared Materials List

GROUP 10 : ADHESIVES

1	2	3	4	5	6	7			8	9							10
										9.1					9.2	9.3	
Item No.	Commercial Identification	Chemical Nature and Product Type	Procurement, Manufacturer / Supplier, Specification and Issue.	Summary of Processing Parameters	Use and Location	Environmental Codes R	A	T	Size Code	Corr	SCC	Flam	OFFG	OUTG	Justification for Approval	Contractors App.	Cust. App.
01	Redux 312 UL	Epoxy film	23-LC-0008 CIBA	PS 2023 30 mins @ 120C	Sandwich panel	L	V	3-4	W3	NA	NA	NA	NA	F	Qual report TR-MMS-395	NASA MUA pending	
02	Eccobond 56c / catalyst 9	Two part silver filled epoxy	09-LC0024 09-LC0027 Emerson and Cuming	Bonding S-4-02-020 Mix: 4:1 pbw Cure: 24 hrs @ RT	Electrically conductive bonding Payload integration	L	V	3-4	W1	NA	NA	NA	NA	P	Skynet, Hispasat, Inmarsat III, SOHO, ASAR, Hotbird Plus,	A	
03	Eccobond 285 / catalyst 9	High thermal conductivity epoxy	23-LC0014	100/3.5, cure 24h/RT S-4-02-036	Insert bonding	L	V	3-4	W2	NA	NA	NA	NA	P	3116-YF002-RPZ	A	
04	Scotchweld ec 2216	Modified epoxy with accelerated amine curing agent	23-LC0053 3M	S-4-02-053 Mix: 5:7 pbw Cure: 24 hrs/T	General bonding Payload integration	L	V	3-4	W2	NA	NA	NA	NA	F	Hispasat, Hotbird	NASA MUA agreed	
05	Epikote 828 / Versamid 140	Epoxy adhesive. Silica filler is used in these applications to thicken the adhesive	MS1063	PS 2024 PS 2143	Locking, bonding.	L	V	3-4	W1	NA	NA	NA	NA	P	Skynet Inmarsat 3	A	
06	EA9395	Epoxy adhesive	CDST-GL001-STE	7d / RT	Bonding	L	V	3-4	W2	NA	NA	NA	NA	F	ASAR	NASA MUA agreed	
07	FM410	Epoxy foam adhesive	Cyanamid 23-LC0041	1h@ 175C	Panels assy	L	V	3-4	W3	NA	NA	NA	NA	P	SOHO MHS Skynet	A	
07	RTV 566	Silicone adhesive	23-LC0051 General Electric	7d/RT	Optic cube bonding	L	V	3-4	W1	NA	NA	NA	NA	P	ASAR	A	
08	SS 4155	Primer for item 10-09	11-LC0026 General Electric	30mins/RT	Primer	L	V	3-4	W0	NA	NA	NA	NA	P	ASAR	A	
09	RTV 142	Silicone adhesive	23-LC0027 General Electric	24hrs/RT	MLI pin bonding	L	V	3-4	W1	NA	NA	NA	NA	P	GOMOS	A	
10	DC 1204	Primer for item 10-07	11-LC0017 Dow Corning	30mins/RT	Primer	L	V	3-4	W0	NA	NA	NA	NA	P	GOMOS	A	
11	Uralane 5750	Polyurathane coating/adhesive	MIL-F-46058	PS 2024	Coating	L	V	3-4	W1	NA	NA	NA	NA	P	ASAR	A	

Declared Materials List

GROUP 11 : ADHESIVE TAPES

1	2	3	4	5	6	7			8	9							10
										9.1					9.2	9.3	
Item No.	Commercial Identification	Chemical Nature and Product Type	Procurement, Manufacturer / Supplier, Specification and Issue.	Summary of Processing Parameters	Use and Location	Environmental Codes R	A	T	Size Code	Corr	SCC	Flam	OFFG	OUTG	Justification for Approval	Contractors App.	Cust. App.
01	Sheldahl tape G 401100	Polyimide tape acrylic adhesive	07-LC0016 Sheldahl	Edge seal panels	Payload integration	L	V	3-4	WI	NA	NA	NA	NA	P	ISO, ERS, Hispasat, Hotbird	A	
02	Y9460	Tape,double-sided, acrylic adhesive	3M 23-LC0035	S-4-04-018	Thermal blanket attachment	L	V	3-4	WI	NA	NA	NA	NA	P	3158-26001-RPZ	A	
03	Chofoil CCJ	Aluminium tape with electrically conductive PSA	17-LC0023 Chomerics	Hand applied self-adhesive tape	Grounding	L	V	3-4	WI	NA	NA	NA	NA	P	ASAR	A	
04	Sheldahl tape G 401902	FEP metallised with silver over inconel, 966 PSA	MS 1124 Sheldahl	Hand applied self-adhesive tape	Thermal control	L	V	3-4	WI	NA	NA	NA	NA	P	GOMOS	A	

Declared Materials List

HIRDLS — GROUP 12 : COATINGS, VARNISHES, PAINTS, PRIMERS, INKS

1	2	3	4	5	6	7			8	9							10
										9.1					9.2	9.3	
Item No.	Commercial Identification	Chemical Nature and Product Type	Procurement, Manufacturer / Supplier, Specification and Issue.	Summary of Processing Parameters	Use and Location	Environmental Codes R	A	T	Size Code	Corr	SCC	Flam	OFFG	OUTG	Justification for Approval	Contractors App.	Cust. App.
01	Marconi ink W3	White, two part epoxy ink	23-LC0025 23-LC0007 09-LC0051 MMS Portsmouth (Manufactured to S-4-02-048)	Painting S-4-07-004, Cure: 12 hrs @ RT Mix: 5:1 pbw	White marking ink for identification	L	V	3-4	W0	N A	N A	N A	N A	F	Skynet, Hotbird Plus, Inmarsat III,	NASA MUA agreed	
02	Solithane S113 / Catalyst C113-300	Polyurethane coating formulation	09-LC0010 23-LC0003 Morton International	Bonding S-4-02-054 Mix: 100:73 Cure: 24 hrs @ 70 °C	Thread locking	L	V	3-4	W1	N A	N A	N A	N A	P	Inmarsat III, Artemis, Skynet, Nilesat	A	
03	PSG 120 FD	White silicone based paint	11-LC0015 AD Aerospace Finishers	S-4-01-018	Thermal control	L	V	3-4	W1	N A	N A	N A	N A	P	Skynet, MHS Inmarsat III	A	

Declared Materials List

HIRDLS — GROUP 13 LUBRICANTS

1	2	3	4	5	6	7			8	9							10
										9.1					9.2	9.3	
Item No.	Commercial Identification	Chemical Nature and Product Type	Procurement, Manufacturer / Supplier, Specification and Issue.	Summary of Processing Parameters	Use and Location	Environmental Codes R	A	T	Size Code	Corr	SCC	Flam	OFFG	OUTG	Justification for Approval	Contractors App.	Cust. App.
01	Molykote 106	MoS2	Dow Corning MS1078	PS 2051 Cure 1h @ 200C	Mechanisms	L	V	3-4	W1	N A	N A	N A	N A	P	PPF	A	
02	Braykote 601	Flouro grease	MS1025	PS 2068 CPK 945/16	Mechanisms	L	V	3-4	W1	N A	N A	N A	N A	P	PPF	A	
03	FC 721 barrier fluid	Fluorocarbon	Free issue from RAL	Apply as thin film by brush and allow to dry at RT	Anti –spread barrier for grease13-02	L	V	3-4	W0	N A	N A	N A	N A	P	PPF	A	

Declared Materials List

GROUP 14 : POTTING COMPOUNDS

1	2	3	4	5	6	7			8	9							10
										9.1					9.2	9.3	
Item No.	Commercial Identification	Chemical Nature and Product Type	Procurement, Manufacturer / Supplier, Specification and Issue.	Summary of Processing Parameters	Use and Location	Environmental Codes R	A	T	Size Code	Corr	SCC	Flam	OFFG	OUTG	Justification for Approval	Contractors App.	Cust. App.
01	Stycast 1090 SI / Cat 9	Epoxy encasulant	09-LC0019 & 09-LC0029	S-4-02-034 24h @ RT + 24h @ 60C	Insert potting	L	V	3-4	W3	NA	NA	NA	NA	P	Skynet AATSR	A	

Declared Materials List

GROUP 15: REINFORCED PLASTICS

1	2	3	4	5	6	7			8	9							10
										9.1					9.2	9.3	
Item No.	Commercial Identification	Chemical Nature and Product Type	Procurement, Manufacturer / Supplier, Specification and Issue.	Summary of Processing Parameters	Use and Location	Environmental Codes R	A	T	Size Code	Corr	SCC	Flam	OFFG	OUTG	Justification for Approval	Contractors App.	Cust. App.
01	M55J / RS-3	CFRP prepreg	YLA 05-LC0091	2h @ 177C S-4-04-022	Panel skins	L	V	3-4	W3	NA	NA	NA	NA	P	3073-18003-RPZ	A	
02	Cycom 69 GF, 1K and 3K	T300 CFRP prepreg	Cytek 05-LC0068	S-4-04-026 20 mins @ 120 + 3h @ 175C	Cleats and panel inserts	L	V	3-4	W2	NA	NA	NA	NA	P	3116-YF002-RPT	A	
03	Epoxy glass laminate	EP3	Tufnol 05-LC0008	S-4-04-018	Thermal standoffs	L	V	3-4	W1	NA	NA	NA	NA	P	SOHO	A	
04	Copper clad laminate	Epoxy glass, copper clad	IPC 4101/21		PCB	L	V	3-4	W1	NA	NA	NA	NA	P	PPF	A	

Declared Materials List

GROUP 16: ELASTOMERS

1	2	3	4	5	6	7			8	9							10
										9.1					9.2	9.3	
Item No.	Commercial Identification	Chemical Nature and Product Type	Procurement, Manufacturer / Supplier, Specification and Issue.	Summary of Processing Parameters	Use and Location	Environmental Codes R	A	T	Size Code	Corr	SCC	Flam	OFFG	OUTG	Justification for Approval	Contractors App.	Cust. App.
01	ELKOSIL 9N	Silicone tube	DIN 40625	NA	seal	L	V	3-4	W2	NA	NA	NA	NA	P	GOMOS	A	

Declared Materials List

GROUP 17 : THERMOPLASTICS

1	2	3	4	5	6	7			8	9							10
										9.1					9.2	9.3	
Item No.	Commercial Identification	Chemical Nature and Product Type	Procurement, Manufacturer / Supplier, Specification and Issue.	Summary of Processing Parameters	Use and Location	Environmental Codes R	A	T	Size Code	Corr	SCC	Flam	OFFG	OUTG	Justification for Approval	Contractors App.	Cust. App.
01																D	
02																D	
03																D	
04																D	
05	PTFE sleeve	Tube	Hellerman 08-LC0002	ES 610	Ident sleeves	L	V	3-4	W1	NA	NA	NA	NA	P	Inmarsat 3	A	
06	PTFE	Machined rod	06-LC0003 ICI	Etched	MLI stud	L	V	3-4	W1	NA	NA	NA	NA	P	ASAR	A	
07	Gude-E –space 18 DPT-H lacing tape	Dacron polyester cord	Gudebrod 12-LC0003	Lacing S-3-05-002	Harness	L	V	3-4	W1	NA	NA	NA	NA	P	Silex Artemis MHS	A	
08	Kynar Sk 32	PVF shrink sleeve	08-LC0007 Hellerman	Harness S-3-02-013	Harness	L	V	3-4	W1	NA	NA	NA	NA	P	Skynet	A	
09	Kynar RT 850	PVF shrink sleeve	08-LC0003 Raychem	Harness S-3-02-013	Harness	L	V	3-4	W1	NA	NA	NA	NA	P	ASAR Silex	A	

Declared Materials List

GROUP 18: THERMOSET PLASTICS & FILMS

1	2	3	4	5	6	7			8	9							10
										9.1					9.2	9.3	
Item No.	Commercial Identification	Chemical Nature and Product Type	Procurement, Manufacturer / Supplier, Specification and Issue.	Summary of Processing Parameters	Use and Location	Environmental Codes R	A	T	Size Code	Corr	SCC	Flam	OFFG	OUTG	Justification for Approval	Contractors App.	Cust. App.
01	VDA Kapton	Polyimide, aluminised	Sheldahl 05-LC0011	S-4-04-018	MLI	L	V	3-4	W2	NA	NA	NA	NA	F	3158-26001-RPZ Waiver reqd	NASA MUA agreed	
02	Black Kapton film	Carbon filled polyimide, plain and aluminised	Sheldahl 07-LC0020	S-4-04-018	MLI	L	V	3-4	W2	NA	NA	NA	NA	P	3158-26001-RPZ	A	
03	Vespel SP 3	Polyimide rod	06-LC0011 DuPont	Machined	Mech parts	L	V	3-4	W1	NA	NA	NA	NA	P	MHS Skynet	A	
04	Aramid thread, K403-70/3	Pure, non-lubricated, un-coated aramid fibre	MS1037	S-4-04-018	MLI interlayer sewing	L	V	3-4	W1	NA	NA	NA	NA	P	ASAR	A	

Declared Materials List

GROUP 19: WIRES AND CABLES

1	2	3	4	5	6	7			8	9							10
										9.1					9.2	9.3	
Item No.	Commercial Identification	Chemical Nature and Product Type	Procurement, Manufacturer / Supplier, Specification and Issue.	Summary of Processing Parameters	Use and Location	Environmental Codes R	A	T	Size Code	Corr	SCC	Flam	OFFG	OUTG	Justification for Approval	Contractors App.	Cust. App.
01	Wire, Raychem 44	Silver plated copper conductor, PVDF insulation	03-LC0002 Raychem	S-4-04-018	MLI grounding wire	L	V	3-4	W1	NA	NA	NA	NA	P	Skynet	A	

DISTRIBUTION LIST

INTERNAL	EXTERNAL
R McKay	N Morris (RAL)
I Stewart	Delivery Data Packs

CHANGE RECORD

CHANGE NUMBER	CLASS	CHANGE DETAILS	ISSUE
3164-00068	-	First Issue	A
3164-00114	II	Update for CDR	1
3164-00335	II	Update for equipment delivery	2
3164-00368	II	Actions from DRB	3

SECTION 2

Declared Processes List PL-MMS-212

HIRDLS

PL-MMS-212
(3164-18003-LIS)
Issue 3

HIGH RESOLUTION DYNAMICS LIMB SOUNDER

Originator: R McKay

Date: 17 February 2000

Subject/Title: **DECLARED PROCESSES LIST**

Description/Summary/Contents:

A list of all processes used to manufacture the HIRDLS equipment supplied by MMS.

Keywords: STH, SSH, FM, Processes

Purpose of this Document:

Reviewed/Approved by:			
Date (yy-mm-dd):	00-02-17		

Matra Marconi Space
Anchorage Road
Portsmouth
Hampshire PO3 5PU
England

EOS

ORIGINAL WHEN RED

HIRDLS
DECLARED PROCESSES LIST
PL-MMS-212

Responsible Engineer: N Crosseland Date: 17 Feb 2000

Quality Assurance: D G Breakell Date: 17th Feb. 2000

Project Manager: IK STEWART Date: 17/Feb/00

© MATRA MARCONI SPACE UK LIMITED

THE COPYRIGHT IN THIS DOCUMENT IS THE PROPERTY OF MATRA MARCONI SPACE UK LIMITED. This document is supplied by Matra Marconi Space UK Limited on the express terms that it is to be treated as confidential and that it may not be copied, used or disclosed to others for any purpose except as expressly authorised under the terms of Contract No N2A 3R 0386.

Any person, other than the authorised holder, who finds or otherwise obtains possession of the document, should post it, together with his/her name and address, to the Registry, Matra Marconi Space UK Limited, Anchorage Road, Portsmouth, England, PO3 5PU. Postage will be refunded.

CONTENTS

1.0 INTRODUCTION

2.0 TABULATION EXPLANATION

3.0 PROCESSES LIST

1.0 SCOPE

This document contains a list of processes used by MMS for manufacture and assembly of HIRDLS equipment

2.0 TABULATION EXPLANATION

A ten column table defines the information. The columns are as follows:

Column 1: **ITEM NUMBER:**
An arbitrary number specific to each process. The processes appear in 17 groups described below.

GROUP NUMBER	PROCESS TYPE
1	ADHESIVE BONDING
2	COMPOSITE MANUFACTURE
3	ENCAPSULATION/MOULDING
4	PAINTING/COATING
5	CLEANING
6 *	WELDING
7	CRIMPING/STRIPPING/WIRE WRAPPING
8	SOLDERING/BRAZING
9	SURFACE CONVERSION
10 *	PLATING
11 *	MACHINING
12 *	FORMING
13 *	HEAT TREATMENT
14	SPECIAL FABRICATION
15	MARKING
16	MISCELLANEOUS
17 *	INSPECTION

* No processes in these categories are used

Column 2: **PROCESS IDENTIFICATION:**
The process name, title, clear identification, etc.

Column 3: **SPECIFICATION:**
The document number and issue.

Column 4: **DESCRIPTION:**
Brief process description.

Column 5: **USAGE AND LOCATION:**
Location of item on spacecraft.

Column 6: **MANUFACTURER NAME:**
Name (of the one who applies the process).

Column 7: **ASSOCIATED ITEMS:**
Corresponding items in the materials list.

Column 8: **CRITICALITY OF PROCESS:**
A critical process is defined as one which:
1) The quality cannot be assessed by visual examination alone.
2) Which has caused problems previously.
3) With which there has been no previous application experience.

Column 9.1: **JUSTIFICATION:**
Either qualification plans or previous space programmes.

Column 9.2 **STATUS:**
To identify the qualification status of the process a letter code is selected from the following table:

STATUS
A = Approved
O = Open investigation/under qualification
D = Deleted

Column 10: **CUSTOMER APPROVAL:**
This column is to be completed by the customer.

3.0 DECLARED PROCESSES LIST

The declared processes list is presented in tables in the following pages, according to the format described in 2.0

Declared Process List

HIRDLS | GROUP 1 : ADHESIVE BONDING

1	2	3	4	5	6	7	8	9.1	9.2	10
Item No.	Process Identification	Specification	Process Description	Use and Location	Manufacturers Name	Materials List No.	Criticality of Process	Justification for Approval	Contractors Approval	Customer Approval
01	Adhesive bonded honeycomb structures	PS 2023	Sandwich panel fabrication using Redux 312UL	Structure	MMS	1-01 10-1 15-01	No	Skynet Qual report TR-MMS-395	A	
02	Manufacturing Procedure for Bonding of Parts Using Eccobond 56 C with Catalyst 9	S-4-02-020	Electrically Conductive Bonding Cure : 24 Hrs RT Mix 4:1 PBW	Conductive grounding bonding	MMS	1-05 10-2	No	Skynet, Hispasat, Inmarsat III, SOHO, ASAR, Hotbird Plus	A	
03	Fillet locking	S-3-02-051	Fastener locking using Scotchweld 2216	Structure	MMS	4-02 6-03 6-04 10-04	No	Hispasat, Hotbird	A	
04	Bonding with Scotchweld EC 2216	S-4-02-053 S-3-02-011	General Bonding Cure : 24 Hrs RT Mix 5:7 PBW	Integration	MMS	1-06 1-09 10-04	No	Hispasat, Hotbird	A	
05	Bonding with Eccobond 285	S-4-02-036	Thermally conductive bonding	Structure assembly	MMS	10-03	No	Skynet , Hispasat, Inmarsat	A	
06	Fastener locking	PS 2143	Thread locking	Structure assembly	MMS	10-05	No	Skynet	A	
07	Cleat bonding using Hysol EA 9395	CDST-HB001-STE, method 46	Cleat bonding	Structure assembly	MMS	10-06	No	Orion 2	A	
08	Adhesive bonding	PS 2024	Non-structural attachment	Label bonding	MMS	10-05	No	Skynet, Nilesat	A	
09	Bonding with RTV 566 and primer SS4155	S-4-02-062	RT cure	Optic cube bonding	MMS	09-01 10-07 10-08	No	ASAR	A	
10	Insert bonding	S-3-04-037	1 Hr / 175C	Insert bonding in panels	MMS	10-07 4-01	No	TR-MMS-395	A	

Declared Process List

HIRDLS | GROUP 2: COMPOSITE MANUFACTURING

1	2	3	4	5	6	7	8	9.1	9.2	10
Item No.	Process Identification	Specification	Process Description	Use and Location	Manufacturers Name	Materials List No.	Criticality of Process	Justification for Approval	Contractors Approval	Customer Approval
01	Composite faceskins layup and cure using cyanate ester cfrp	S-4-04-022	Autoclave / vac bag process	Structure panels skins	MMS	15-01	No	MHS Inmarsat III Ressat	A	
02	Epoxy cfrp use	S-4-04-026	Autoclave / vac bag process	Cleats	MMS	15-02	No	MHS AATSR	A	

Declared Process List

HIRDLS | GROUP 3: ENCAPSULATION

1	2	3	4	5	6	7	8	9.1	9.2	10
Item No.	Process Identification	Specification	Process Description	Use and Location	Manufacturers Name	Materials List No.	Criticality of Process	Justification for Approval	Contractors Approval	Customer Approval
01	Insert bonding	S3-02-034	Encapsulation of inserts into sandwich panel	Structure	MMS	14-01 10-10	No	Inmarsat III MHS Skynet	A	

Declared Process List

HIRDLS | GROUP 4: PAINTING AND COATING

1	2	3	4	5	6	7	8	9.1	9.2	10
Item No.	Process Identification	Specification	Process Description	Use and Location	Manufacturers Name	Materials List No.	Criticality of Process	Justification for Approval	Contractors Approval	Customer Approval
01	Application of white thermal control paint	S-4-04-052	Paint application by spray process	Structure exterior in specific locations	MMS	12-03 15-03	No	Inmarsat III Ressat Skynet	A	
02	Application of Molykote	PS 2051	Lubricant application	Mechanisms lubricant	MMS	4-01 13-01	No	PPF	A	

Declared Process List

HIRDLS | GROUP 5 : CLEANING

1	2	3	4	5	6	7	8	9.1	9.2	10
Item No.	Process Identification	Specification	Process Description	Use and Location	Manufacturers Name	Materials List No.	Criticality of Process	Justification for Approval	Contractors Approval	Customer Approval
01	Cleaning	PS 2058	Cleaning for pretreatment (anodising)	General	MMS	1-02 1-03 6-01	No	General space process	A	
02	Solvent Cleaning of Parts and Assemblies	S-3-02-064	General Cleaning to be used in conjunction with the procedures for Bonding, Painting and Potting	All	MMS	NA	No	General space process	A	
03	Acid cleaning (passivation) of stainless steel	PS 2089	Immersion in solution of hydrofluoric and nitric acids	Stainless steel mechanisms parts	MMS	6-11	No	GOMOS	A	

Declared Process List

HIRDLS | GROUP 7 : CRIMPING / STRIPPING / WIRE WRAPPING

1	2	3	4	5	6	7	8	9.1	9.2	10
Item No.	Process Identification	Specification	Process Description	Use and Location	Manufacturers Name	Materials List No.	Criticality of Process	Justification for Approval	Contractors Approval	Customer Approval
01	Elec assy, Manf Standard	ES 610 S-3-05-018 contains equivalent information	Ident sleeves onto harness	Motor harness	MMS	17-05	No	Skynet	A	

Declared Process List

HIRDLS | GROUP 8 : SOLDERING AND BRAZING

1	2	3	4	5	6	7	8	9.1	9.2	10
Item No.	Process Identification	Specification	Process Description	Use and Location	Manufacturers Name	Materials List No.	Criticality of Process	Justification for Approval	Contractors Approval	Customer Approval
01	Manual Soldering Using Solders with Tin and Lead as Major Constituents	S-4-03-003 ESA PSS-01-708	Manual Soldering	MLI grounding	MMS	7-01	No	ERS-1, Telecom 2, Hispasat, Hotbird	A	

Declared Process List

HIRDLS | GROUP 9 : SURFACE CONVERSION TREATMENTS

1	2	3	4	5	6	7	8	9.1	9.2	10
Item No.	Process Identification	Specification	Process Description	Use and Location	Manufacturers Name	Materials List No.	Criticality of Process	Justification for Approval	Contractors Approval	Customer Approval
01	Anodising	PS 2107 or PS2110	Anodising to provide electrical isolation of Al and wear resistance	Mech parts	MMS	1-02 1-03 1-11 1-12	No	PPF GOMOS	A	
02	Anodising of Al alloys	S3-01-004	Anodised by parts supplier	Inserts	Shurlok	1-10	No	Hotbird Koreasat	A	
03	Anodising of Ti alloys	DTD 942	Anodising of Ti fasteners for controlled lubricity	Ti fasteners	Approved supplier	4-01	No	ASAR Skynet	A	
04	Manufacturing Procedure for the chromate conversion of Aluminium alloys using Alocrom 1200.	S-4-01-007 PS 2068	Alocrom 1200	Small structural items	MMS	1-02 1-03 1-041-09	No	Skynet 4, Inmarsat, Telecom 2, Eutelsat, Hotbird	A	

Declared Process List

HIRDLS | GROUP 14 : SPECIAL FABRICATION

1	2	3	4	5	6	7	8	9.1	9.2	10
Item No.	Process Identification	Specification	Process Description	Use and Location	Manufacturers Name	Materials List No.	Criticality of Process	Justification for Approval	Contractors Approval	Customer Approval
01	Manufacture of multi-layer insulation (thermal blankets)	S4-04-018	Assembly of thermal blanket layers, grounding points etc and integration to structure	MLI	MMS	11-02,15-03, 17-01, 17-02, 17-03, 17-04, 18-01, 18-02,18-04	NO	Skynet ASAR Hotbird	A	

Declared Process List

HIRDLS | GROUP 15 : MARKING

1	2	3	4	5	6	7	8	9.1	9.2	10
Item No.	Process Identification	Specification	Process Description	Use and Location	Manufacturers Name	Materials List No.	Criticality of Process	Justification for Approval	Contractors Approval	Customer Approval
01	Marking with Marconi White Ink (W3)	S-4-07-004	General Marking Cure : 12 Hrs RT + 12 Hrs @ 60°C.	Payload Integration, panels and piece parts identification	MMS	M12-001	NO	SOHO PROS, ERS 1, Skynet, Hispasat	A	
02	Use of Fotofoil label	S-4-07-021	Lithography process from artwork. Bonding process 1-04, DML item 10-04	Formation of labels for equipment identification	MMS	1-06		Inmarsat III Hotbird Skynet	A	

Declared Process List

HIRDLS | GROUP 16 : MISCELLANEOUS PROCESSES

1	2	3	4	5	6	7	8	9.1	9.2	10
Item No.	Process Identification	Specification	Process Description	Use and Location	Manufacturers Name	Materials List No.	Criticality of Process	Justification for Approval	Contractors Approval	Customer Approval
01	Torque Requirements for Threaded Devices	S-3-04-012	Closing fasteners to required torque	Structure Integration	MMS	4-02 6-03 6-04	No	Skynet 4, Hotbird, Inmarsat	A	
02	Installation of Wire Thread Inserts	S-3-04-052	Installation	Payload Integration	MMS	6-02	No	Skynet 4, Hotbird	A	
03	Preparation of Bonding Surfaces	S-4-04-013	Abrasion, Cleaning Methods and Water-Break Test	Bonding Operations	MMS	15-01 15-02	No	Skynet 4, Inmarsat	A	
04	Packaging and Handling of Materials	S-4-07-019 S-3-07-001	General Standard for Packaging and Handling of Spacecraft Equipment	General	MMS	Not Relevant	No	Skynet 4, Inmarsat	A	
05	Standard for Requirements of Work Environment Control	S-3-07-006 (CDSP-DB010-STE)	Clean Work Area Conditions	General	MMS	Not Relevant	No	Skynet 4, Inmarsat, Hotbird Plus	A	
06	Preparation of Marconi Ink W3	S-4-02-048	Preparation of item M12-001	Mixture of resin and titanium dioxide powder	MMS	12-01	No	Hotbird, ST-1, Astra 2B	A	
07	Age Limits of Chemicals	S-3-07-019 (CDSP-FG005-PRE)	Control	General	MMS	General	No	All projects	A	
08	Handling and Storage of Chemicals	S-3-07-005 (CDSP-FG005-PRE)	Control	General	MMS	General	No	All projects	A	
09	Lacing	S-3-05-002	Harness assembly	Integration	MMS	17-07	No	Silex MHS	A	
10	Installation of shrink fit parts	S-3-05-013 (ES 610)	Harness assembly	Integration	MMS	17-05 17-08 17-09	No	Skynet 4, Inmarsat, Silex	A	

DISTRIBUTION LIST

INTERNAL	EXTERNAL
R McKay	N Morris (RAL)
I Stewart	Delivery Data Packs

CHANGE RECORD

CHANGE NUMBER	CLASS	CHANGE DETAILS	ISSUE
3164-00069	-	First Issue	A
3164-00113	II	Update for CDR	1
3164-00336	II	Update for equipment delivery	2
3164-00367	II	Actions from DRB	3

SECTION 3

As Designed as Built Reconciliation (ABCL)

MATRA MARCONI (SPACE) LTD.
ANCHORAGE ROAD
PORTSMOUTH - HAMPSHIRE

HIRDLS

AS BUILT
C O N F I G U R A T I O N I T E M D A T A L I S T

F O R

SPACE VIEW ALBEDO ASSEMBLY - FM

3164-SV011-LIE
TC-MMS-481

SECTION 1 CONTROL DOCUMENTATION

TITLE	NUMBER	AS DESIGN
SPACE VIEW ALBEDO ASSEMBLY	HR2L040	2
SUNSHIELD SUBSYSTEM SPECIFICATION	3164-SA001-SPY	D
SPACE VIEW APERTURE ASSY (FM) DRG TR	3164-SV001-21-F	2
SPACE VIEW ALBEDO ASSEMBLY ICD	3164-SV001-25-0	1

DATA LIST THIS LIST COMPRISES THE FOLLOWING SECTIONS AT
STATUS LOG ISSUE SHOWN

ISSUE	1	N/A	1	1	1	N/A	TOTALS
SECTION	1	2	3	4	5	6	4
SHEETS	1	N/A	1	1	1	N/A	

CONFIGURATION CONTROL							
PRODUCT ASSURANCE							
PROJECT MANAGER							
CUSTOMER							
ISSUE	1						
CCB DATE	9·2·00						

PROJECT HIRDLS : SHEET 1 OF 4 : NUMBER 3164-SV011-LIE

MATRA MARCONI SPACE UK LIMITED
ORG UK PLT DC

AS BUILT / AS DESIGNED REPORT

Item No: HR2L040
Mfg Ecl: 05
Description: SPACE VIEW ALBEDO ASSEMBLY
Lot Number: AIT0182080
Wo Number : AIT0182080

Design Ecl: 05
Design Plant: DC
Serial Number: FM001

Document Reference: 3164-SV011-LIE (TC-MMS-481)
Issue: 1
Section: 3

Level	Item No / Description	Design Ecl	Mfg Ecl	Parent Order No	Mfg Plant	Built Using Mfg Order/ Message	Serial Number/ Lot Number
1	HR2L040 SPACE VIEW ALBEDO ASSEMBLY		04	AIT0182080	PM	MFG0182080 re-inspected to issue 05	FM MFG0182080
.2	3164-SV006-20 Spring Support Housing	02	02	MFG0182080	PM	AIT0182108	AIT0182108
..3	3164-SV006-20 Spring Support Housing		01	AIT0182108	PM	re-inspected to issue 02	FM28178/3
.2	3164-SV007-20 Cover Stop	01	01	MFG0182080	PM		FM27953/2
.2	HR2L014 SCREW STOP	02	02	MFG0182080	PM		FM28561/1
.2	HR2L034 Cover (Painting Drg)	02	02	MFG0182080	PM	MFG0168187	MFG0168187
..3	HR2L009 Cover	3	3	MFG0168187	PM		FM28734/1
.2	HR2L040 SPACE VIEW ALBEDO ASSEMBLY		03	MFG0182080	PM	MFG0170716 re-inspected to issue 04	FM MFG0170716
..3	GMLS424 ADAPTOR PLATE	01	01	MFG0170716	PM		MS25422
..3	HR2L004 MOTOR ASSEMBLY	01	01	MFG0170716	PM		BR09797
..3	HR2L008 +Y PANEL MOUNTING PANEL	04	04	MFG0170716	PM	MFG0168186	MFG0168186
...4	HR2L008 +Y PANEL MOUNTING PANEL		03	MFG0168186	PM	re-inspected to issue 04	MS27580
..3	HR2L010 MOUNTING BRACKET	01	01	MFG0170716	PM		MS24930
..3	HR2L011 MOUNTING BRACKET	01	01	MFG0170716	PM		MS24931
..3	HR2L012 MOUNTING BRACKET	01	01	MFG0170716	PM		MS24932
..3	HR2L013 MOUNTING BRACKET	01	01	MFG0170716	PM		MS24933
..3	HR2L015 MOUNTING BRACKET	01	01	MFG0170716	PM		MS24934
..3	HR2L016 MOUNTING FLANGE	03	03	MFG0170716	PM	MFG0168189	MFG0168189
...4	HR2L016 MOUNTING FLANGE		02	MFG0168189	PM	re-inspected to issue 03	BR10870
..3	HR2L017 Interface	1	1	MFG0170716	PM		BRE10869
..3	HR2L018 Screw Special	1	1	MFG0170716	PM		BR10870
..3	HR2L019 Stop	1	1	MFG0170716	PM		BR10871
..3	HR2L021 Sleeve	1	1	MFG0170716	PM		BR10872
..3	HR2L022 Spigot	1	1	MFG0170716	PM		BR10873
..3	HR2L023 Housing	3	3	MFG0170716	PM		MS26999
..3	HR2L024 Guide	2	2	MFG0170716	PM		FM28178/1
..3	HR2L025 BRACKET (CONNECTOR)	03	03	MFG0170716	PM	MFG0168190	MFG018190
...4	HR2L025 BRACKET (CONNECTOR)		02	MFG0168190	PM	re-inspected to issue 03	BR10860 00
..3	HR2L027 Shim	1	1	MFG0170716	PM		BR10876
..3	HR2L028 SPECIAL BUSH	01	01	MFG0170716	PM		MS27000
..3	HR2L029 SHIM PACK (SPECIAL BUSH)	01	01	MFG0170716	PM		FM27618/1
..3	HR2L031 Bolt Special	1	1	MFG0170716	PM		MS28143
..3	HR2L032 Washer Bracket Special	1	1	MFG0170716	PM		MS27884
..3	HR2L033 Spacer	1	1	MFG0170716	PM		MS27883
..3	HR2L035 MOUNTING BRACKET	03	03	MFG0170716	PM	MFG0168191	MFG0168191
...4	HR2L035 MOUNTING BRACKET		02	MFG0168191	PM	re-inspected to issue 03	MS25354
..3	HR2L036 ALBEDO SHIELD	02	02	MFG0170716	PM		MS25783
..3	HR2L057 Housing Torsion Spring	02	02	MFG0170716	PM		FM28178/2
.2	HR2L056 Torsion Spring	01	01	MFG0182080	PM		FM29032/3
1	HR2L058 Stop Spring	02	02	AIT0182080	PM		FM30962/1

SHEET 2 OF 4

Issue : 1
Section : 4 TOOL PROCESSING DOCUMENTATION

Parent Item : HR2L040 Parent ECL : 05
Description : SPACE VIEW ALBEDO ASSEMBLY ECO : 3164-00324

List No.	MMS Document Number	External Document Number	Design Issue	Document Title
1	TAA2123		1	SEAL LOCATION TOOL
2	TAA2124		1	ASSEMBLY FIXTURE (VIBRATION)
3	TAA2125		1	LATCH RETAINER ASSEMBLY
4	TAA2126		1	LOCATION PLUG (ALBEDO SHIELD)
5	TAA2127		1	SVA ASSEMBLY FIXTURE
6	TAA2128		1	THERMAL VAC AND ASSEMBLY FIXTURE

Issue : 1

Section : 5 DESIGN REVIEW DOCUMENTATION

Parent Item : HR2L040
Description : SPACE VIEW ALBEDO ASSEMBLY

Parent ECL :04
ECO :3164-00324

List No.	MMS Document Number	Ext Document Number	Design Issue	Document Title
1	3164-11005-LIZ	PA-MMS-317	1	MISSION ASSURANCE REQUIREMENTS COMPLIANCE MATRIX
2	3164-11005-TNO	PA-MMS-096	1	PA REQUIREMENTS COMPLIANCE MATRIX
3	3164-11007-TNO	PA-MMS-453	1	STH, SSH AND SVA RISK REGISTER
4	3164-12001-PLC	SP-MMS-073	A	CADM PLAN
5	3164-18002-LIM	PL-MMS-211	~~2~~ 3	DECLARED MATERIALS LIST
6	3164-18003-LIS	PL-MMS-212	~~2~~ 3	DECLARED PROCESSES LIST
7	3164-SA010-SME	SW-MMS-358	A	INSTRUMENT FIELD OF VIEW
8	3164-SA028-TPF	TP-MMS-451	3	SPACE VIEW APERTURE ASSEMBLY FM TEST PROCEDURE
9	3164-SS001-DAI	DW-MMS-449	1	FM STH SUBSYSTEM ASSEMBLY INSTRUCTION
10	3164-SS003-ANA	PA-MMS-210	E	STH AND SSH FMECA
11	3164-SS004-ANR	PA-MMS-209	E	STH AND SSH RELIABILITY PREDICTION
12	3164-SS055-PLT	TP-MMS-248	C	STH, SSH AND SVA DESIGN DEVELOPMENT AND TEST PLAN
13	3164-SS067-RPZ	TC-MMS-381	A	INSTRUMENT THERMAL ANALYSIS REPORT
14	3164-SS069-ANH	PA-MMS-386	A	HAZARD ANALYSIS REPORT MMS SUPPLIED SUBSYSTEMS
15	3164-SS070-PLP	PA-MMS-387	A	MMS SUBSYSTEMS CLEANLINESS AND CONTAMINATION CONTROL PLAN
16	3164-SS073-TNO	TC-MMS-399	1	INSTRUMENT FM CONFIGURATION AND INTEGRATION PLAN
17	3164-SS075-ANZ	TC-MMS-206	H	STH AND SSH SUBSYSTEM MASS ESTIMATE
18	3164-SS090-MAI	SP-MMS-455	2	FM STRUCTURE/THERMAL SUBSYSTEM ASSEMBLY AND DISASSEMBLY HANDBOOK
19	3164-SS091-TNO	TC-MMS-454	1	FM STH/SSH/SVA VENTING
20	3164-SV001-DAI	DW-MMS-389	2	SVA ASSEMBLY PROCEDURE
21	3164-SV004-DPE	TC-MMS-438	A	EM SPACE VIEW APERTURE ASSEMBLY END ITEM DATA PACKAGE
22	3164-SV012-TRF	TR-MMS-485	1	FM SVA VIBRATION TEST REPORT
23	3164-SV013-TRF	TR-MMS-486	1	FM SVA THERMAL VACUUM & FUNCTIONAL TEST REPORT
24	SP-MMS-355	SP-MMS-355	1	PROCUREMENT SPEC SVA GEARHEAD DRIVE
25	SP-MMS-356	SP-MMS-356	1	PROCUREMENT SPEC FOR FRAMELESS BRUSHED DC MOTOR
26	SP-MMS-357	SP-MMS-357	1	PROCUREMENT SPEC FOR POTENTIOMETER
27	TC-MMS-384	TC-MMS-384	1	SSH AND SVA DESIGN ANALYSIS REPORT

SECTION 3

Waiver List, Status & Implemented Waivers

SECTION 3

None Applicable

SECTION 3

Major Non-Conformance Reports

SECTION 3

Major Non-Conformance Reports

None Applicable

SECTION 3

Test Procedures

HIRDLS

TP-MMS-451
(3164-SA028-TPF)
Issue 3

HIGH RESOLUTION DYNAMICS LIMB SOUNDER

Originator: R Coupe

Date: 21 September, 1999

Subject/Title: **Space View Aperture Assembly FM Test Procedure**

Description/Summary/Contents:

This document details the test plan and requirement to qualify the HIRDLS SVA assembly at unit level, and is applicable to the FM unit.

Keywords: FM, Space View Aperture, Test Procedure

Purpose of thisDocument: FM Test Procedure

Reviewed/Approved by: Date (yy-mm-dd):			

Matra Marconi Space
Anchorage Road
Portsmouth
Hampshire PO3 5PU
England

EOS

ORIGINAL WHEN RED

SPACE VIEW APERTURE ASSEMBLY
FM TEST PROCEDURE

TP-MMS-451

Responsible Engineer: N Crossland Date: 21st Sept 1999

Quality Assurance: Date: 23-9-99

Project Manager: Date:

© MATRA MARCONI SPACE UK LIMITED

THE COPYRIGHT IN THIS DOCUMENT IS THE PROPERTY OF MATRA MARCONI SPACE UK LIMITED. This document is supplied by Matra Marconi Space UK Limited on the express terms that it is to be treated as confidential and that it may not be copied, used or disclosed to others for any purpose except as expressly authorised under the terms of Contract No N2A 3R 0386.

Any person, other than the authorised holder, who finds or otherwise obtains possession of the document, should post it, together with his/her name and address, to the Registry, Matra Marconi Space UK Limited, Anchorage Road, Portsmouth, England, PO3 5PU.
Postage will be refunded.

CONTENTS

1. SCOPE 4

2. APPLICABLE DOCUMENTS 4

2.1 DOCUMENTS 4
2.2 DRAWINGS 4

3. TEST PLAN 4

3.1 MODEL PHILOSOPHY 4
3.2 TEST SPECIMEN 4
3.3 TEST SEQUENCE 4

4. TEST REQUIREMENT 5

4.1 GENERAL REQUIREMENTS 5
4.2 PRELIMINARY TESTS 5
4.2.1 Preliminary Electrical Tests 5
4.3 DETERMINE TORQUE LIMITING RESISTOR VALUE 5
4.4 BASELINE FUNCTIONAL TEST 6
4.4.1 Hinge Drive Axis - vertical configuration test 6
4.4.2 Hinge Drive Axis - horizontal configuration test 7
4.5 VIBRATION TEST 7
4.5.1 Sine Survey 8
4.5.2 Random Vibration 8
4.6 POST VIBRATION FUNCTION TEST 9
4.6.1 Test Results 9
4.7 THERMAL VACUUM TEST 10
4.7.1 Test Configuration 10
4.7.2 Functional tests 12

APPENDIX A DETAILED TEST INSTRUCTIONS 13

DISTRIBUTION LIST 26

CHANGE RECORD 26

1. SCOPE

This document details the test plan and requirement to verify the HIRDLS Space View Aperture Assembly Flight Model at unit level.

2. APPLICABLE DOCUMENTS

2.1 Documents

a) Sun Shield Requirement Specification SP-HIR-50.
b) STH, SSH and SVA Design Development and Test Plan TP-MMS-248.
c) Manual for SSH & SVA Test equipment (EGSE) TC-MMS-400

2.2 Drawings

a) Space View Albedo Shield assembly -HR2L040
b) Vibration Fixture - TAA2203.
c) Thermal Vacuum and Assembly Fixture - TAA2217.

3. TEST PLAN

3.1 Model Philosophy

The SVA model philosophy is defined in the STH, SSH and SVA DD&T plan, AD2.1 (b). The FM will be subjected to the acceptance level tests described herein.

3.2 Test Specimen

The test specimen is the SVA assembly FM unit - HR2L040.

3.3 Test Sequence

The test sequence for the FM SVA assembly is as follows:-

- Baseline functional test.
- Thermal vacuum test.
- Vibration test.
- Post Vibration functional test.

4. TEST REQUIREMENT

This Section details the full test programme which shall be implemented to verify the Space View Aperture Assembly FM at unit level. The instruction sheets included in Appendix A are intended as an aid to the test flow and as a pro forma for the test results. They should be used in conjunction with the main body of this procedure and modified expediently if required.

4.1 General Requirements

The following general requirements are applicable throughout the course of all testing :-

After each motor drive operation cycle, prior to subsequent operation cycle allow :-
15 minutes for motor to cool in vacuum
5 minutes for motor to cool in air

Once motor has stalled after operation cycle, it should be switched off immediately

4.2 Preliminary Tests

Motor assembly HR2L004 to be tested to verify operation of both motors prior to integration into HR2L040. Test in accordance with PO-DIS-MMB-GM-0030 - Motor assembly burn-in test.

- Set up SVA assembly (HR2L040) in assembly fixture (TAA2217) with cover hinge axis vertical.
- Determine torque to manually operate mechanism.

4.2.1 Preliminary Electrical Tests

Fit saver connector to SVA connector
Connect motor flying leads together temporarily to complete motor drive circuits

- Verify terminal resistance of both SVA motors (prime and redundant): 22.7Ω ± 12.5%
- Verify microswitches open and close status against position
- Verify resistance of thermistors at 20°C ≅ 2.8KΩ and that the drive is positive.
- Determine resistance of grounding between cover and baseplate.
- Verify pin connections with respect to each thermistor location (sketch configuration)

4.3 Determine Torque limiting resistor value

Connect short cable harness to breakout box, connect power supply +ve lead to pin 3 and -ve lead to pin 14, for motor A. (Connect power supply +ve lead to pin 4 and -ve lead to pin9, for motor B.) These configurations will open the cover

- Set power supply to 0 Volts and 0.5 Amps.
- Gradually increase voltage of power supply until drive starts to rotate.
- Allow mechanism to fully open cover and switch off power supply.
- Reverse +ve and -ve power supply leads switch on power supply.
- Allow mechanism to fully close cover and switch off power supply.

Using the following parameters calculate the torque limiting resistor value required to provide a torque margin of x3 when operated at 28V.

- Terminal resistance $R1$
- Minimum operating voltage $V1$

$$\text{Resistor Value} = \left\{\frac{R1 \times 28}{V1 \times 3}\right\} - R1$$

Repeat above operations using motor B.

4.4 Baseline Functional Test

4.4.1 Hinge Drive Axis - vertical configuration test

Set up SVA assembly (HR2L040) in assembly fixture (TAA2127) with cover hinge axis vertical.
Connect HIRDLS EGSE cable harness to SVA connector (refer to manual TC-MMS-400 para 4.1) and set parameters on screen.

Alternatively, if EGSE is not available :-
Connect short cable harness to breakout box, connect power supply +ve lead to pin 3 and -ve lead to pin 14, for motor A. (Connect power supply +ve lead to pin 4 and -ve lead to pin9, for motor B.) These configurations will open the cover

- Set power supply to 28 Volts and 0.5 Amps.
- Switch on power supply
- Allow mechanism to fully open cover and switch off power supply.
- Verify fully open microswitch indicates correct status of cover.
- Reverse +ve and -ve power supply leads switch on power supply.
- Allow mechanism to fully close cover and switch off power supply.
- Verify fully closed microswitch indicates correct status of cover.
- Set power supply to 0 Volts and 0.5 Amps.
- Reverse +ve and -ve power supply leads switch on power supply.
- Gradually increase voltage of power supply until drive starts to rotate. (Record voltage)
- Switch off power supply, increase voltage of power supply to 28V, switch on power supply.
- Allow mechanism to fully open cover and switch off power supply.
- Verify fully closed microswitch indicates correct status of cover.
- Set power supply to 0 Volts and 0.5 Amps.
- Reverse +ve and -ve power supply leads switch on power supply.
- Gradually increase voltage of power supply until drive starts to rotate. (Record voltage)
- After cover rotates to close position and stalls, gradually increase voltage of power supply until drive starts to rotate. (Record voltage)
- Allow mechanism to fully close cover and switch off power supply.
- Verify fully closed microswitch indicates correct status of cover.
- Repeat opening / closing to a total of 10 operations

4.4.2 Hinge Drive Axis - horizontal configuration test

Set up SVA assembly (HR2L040) in assembly fixture (TAA2217) with cover hinge axis horizontal. Repeat operations detailed in para 4.3.1.

4.5 *Vibration Test*

The FM unit shall undergo workmanship level random vibration testing. Low level sine surveys shall be performed before and after each random vibration test to verify that the dynamic characteristics of the unit have not changed. The test sequence shall be as follows :

For each axis in turn (no preference for the order):

Low level sine survey	(See Section 4.5.1)
Workmanship level random vibration	(See Section 4.5.2)
Low level sine survey	(See Section 4.5.1)

The vibration axes and accelerometer positions are defined in Figure 4.5-1. For testing, the SVA shall be mounted to the vibration fixture (Drawing No. TAA2203) in accordance with the top level Assembly Drawing (No. HR2L040) requirements.

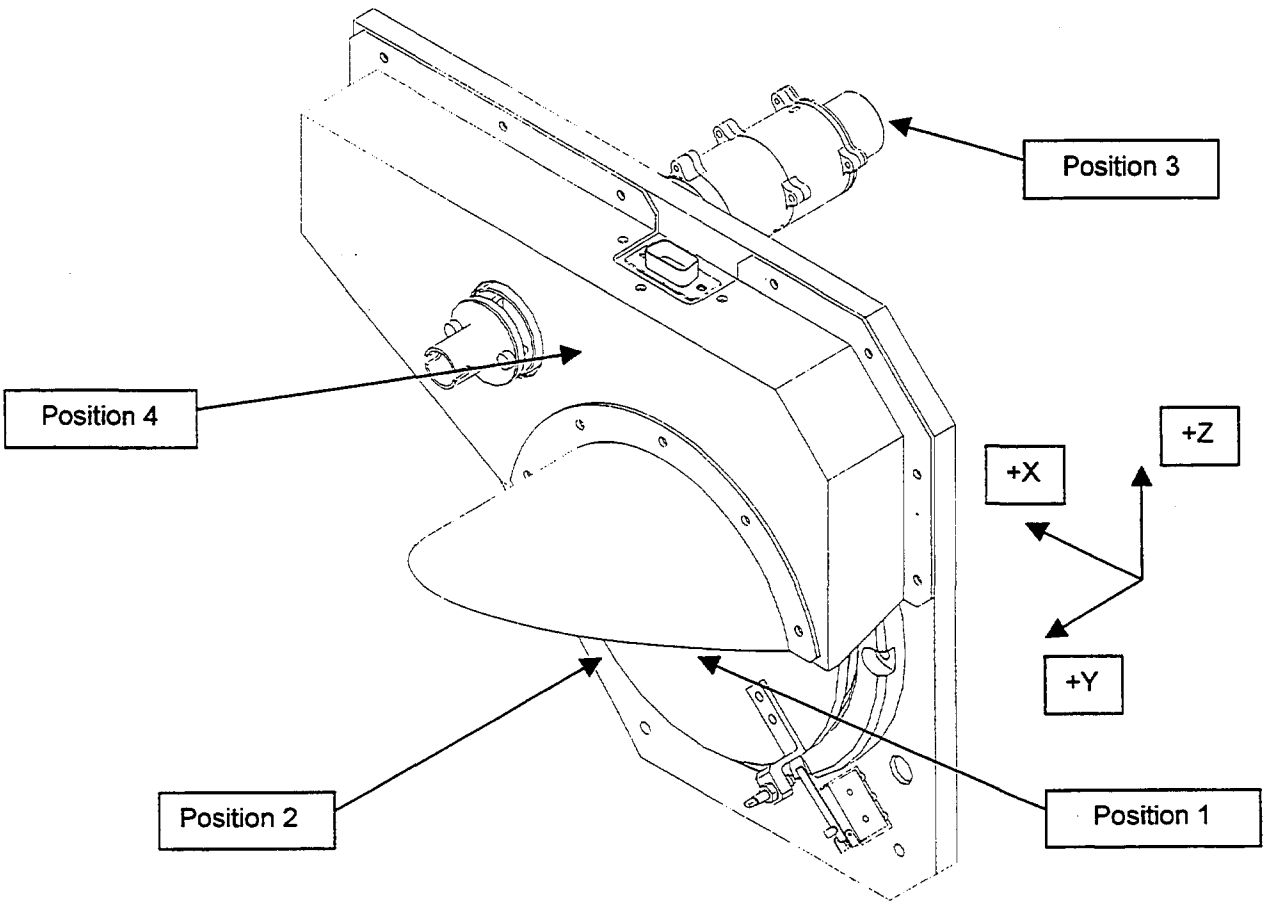

Figure 4.5-1 Test Axes and Instrumentation Definition for Vibration Test

Tri-axial accelerometers shall be mounted at each of the positions shown which are summarised below.

Position 1 Centre of Aperture cover
Position 2 SVA baseplate adjacent to door
Position 3 End of the Motor Housing
Position 4 Albedo Shield Cover

Note: Refer to Test Director for exact positions of instrumentation

4.5.1 Sine Survey

Low level sine surveys shall comprise a single sweep from 5 to 2000 Hz at a sweep rate of 2 octaves/minute and at a level of 0.2g.

4.5.2 Random Vibration

Workmanship test levels are given in Table 4.5-2. FM tests shall have a duration of 60 seconds per axis.

Axis	Frequency (Hz)	Level (g^2/Hz)	Total Level (grms)
	20	0.01	)
X	20-50	+3 dB/oct	)
Y	50-800	0.08	) 7.4
Z	800-2000	- 3 dB/oct	)

Table 4.5-2 Random Vibration Workmanship Test

4.6 Post Vibration Function Test

Connect HIRDLS EGSE cable harness to SVA connector (refer to manual TC-MMS-400 para 4.1) and set parameters on screen.

Alternatively, if EGSE is not available :-
Connect short cable harness to breakout box, connect power supply +ve lead to pin 3 and -ve lead to pin 14, for motor A. (Connect power supply +ve lead to pin 4 and -ve lead to pin9, for motor B.) These configurations will open the cover

- Set power supply to 28 Volts and 0.5 Amps.
- Switch on power supply
- Allow mechanism to fully open cover and switch off power supply.
- Verify fully open microswitch indicates correct status of cover.
- Reverse +ve and -ve power supply leads switch on power supply.
- Allow mechanism to fully close cover and switch off power supply.
- Verify fully closed microswitch indicates correct status of cover.
- Set power supply to 0 Volts and 0.5 Amps.
- Reverse +ve and -ve power supply leads switch on power supply.
- Gradually increase voltage of power supply until drive starts to rotate.(Record voltage)
- Switch off power supply, increase voltage of power supply to 28V, switch on power supply.
- Allow mechanism to fully open cover and switch off power supply.
- Verify fully closed microswitch indicates correct status of cover.
- Set power supply to 0 Volts and 0.5 Amps.
- Reverse +ve and -ve power supply leads switch on power supply.
- Gradually increase voltage of power supply until drive starts to rotate.(Record voltage)
- After cover rotates to close position and stalls, gradually increase voltage of power supply until drive starts to rotate.(Record voltage)
- Allow mechanism to fully close cover and switch off power supply.
- Verify fully closed microswitch indicates correct status of cover.
- Repeat opening / closing to a total of 4 operations

4.6.1 Test Results

Compare post-vibration test results with the baseline functional test results (Para 4.3).

4.7 Thermal Vacuum Test

The FM unit shall be tested in vacuum (<10^{-5} Torr) at its upper and lower acceptance temperature limits whilst operational and when driven by representative electronics. The thermal vacuum test profile is shown in Figure 4.5-1. The SVA shall be mounted so that the hinge axis is vertical. The test shall be controlled by the reference thermocouple which shall be attached to the baseplate.

The time duration spent at each upper or lower limit shall be a minimum of 4 hours (see Figure 4.5-1). The rate of change between limits shall not exceed 5°C/min.

Acceptance temperature limits are given in Table 4.5-1.

Operating	
Min	**Max**
-25	25

Table 4.5-1 : Acceptance Temperature Limits (°C)

The time duration (minimum) spent at each limit and the maximum rate of change between limits, shall be 4 hours and 5°C/min respectively (see Figure 4.5-1). The unit shall be tested through 4 complete thermal cycles.

4.7.1 Test Configuration

Fit SVA to assembly fixture TAA2127. Fastener torque tightening requirements are detailed in SVA assembly drawing HR2L040.

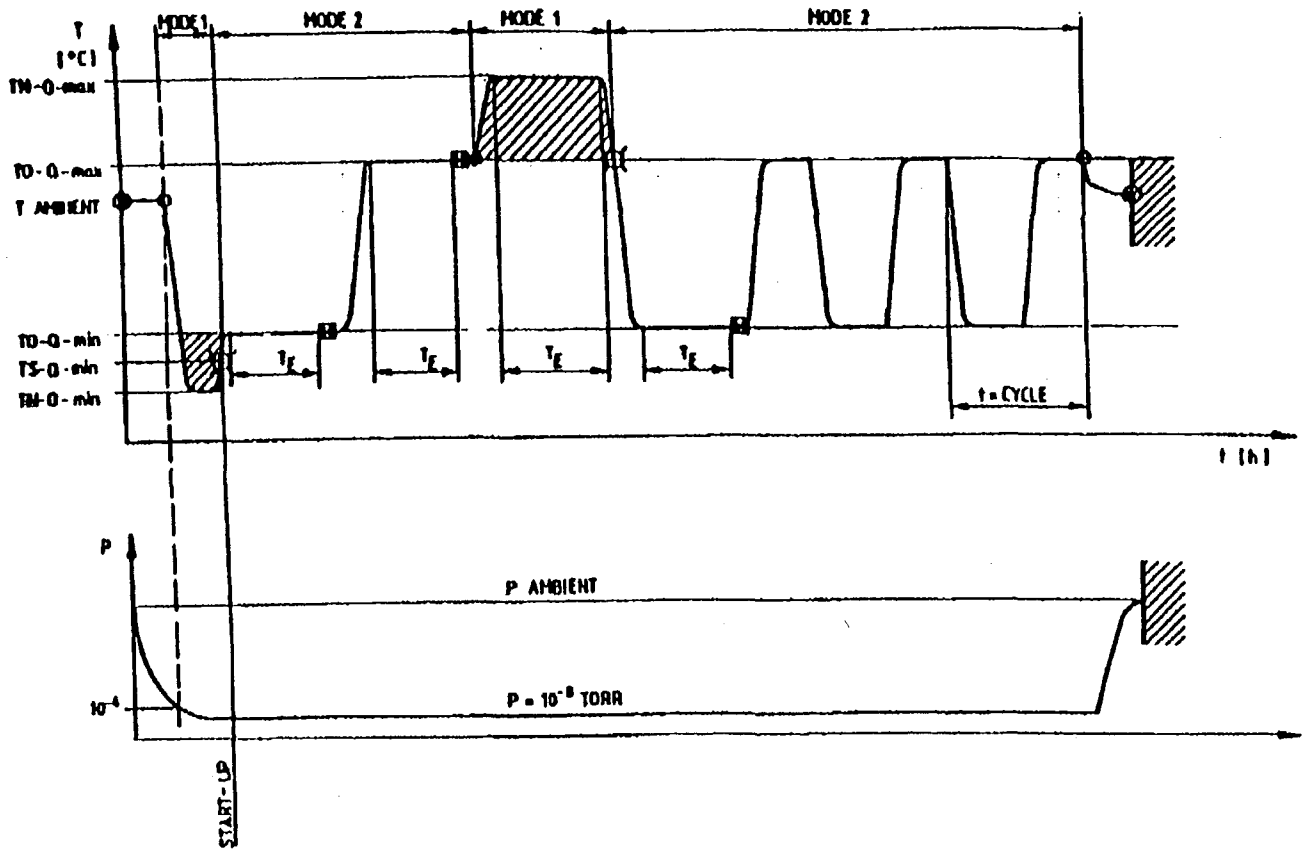

Figure 4.5-1 : SVA Thermal Vacuum Test Profile (GENERIC FOR QUAL + ACCEPTANCE)

4.7.2 Functional tests

The tests detailed below are to be performed:-

prior to closing chamber,
after cold temperature soak at -25°C,
after raising temperature to 25°C, and
at ambient temperature (in vacuum) after completion of 4 thermal cycles.

This represents a total of 16 operations (8 with motor A selected, and 8 with motor B selected).

Set up SVA assembly (HR2L040) in assembly fixture (TAA2127) with cover hinge axis horizontal. Connect short cable harness to HIRDLS EGSE (refer to manual TC-MMS-400 para 4.1) and set parameters on screen.

Alternatively, if EGSE is not available :-
Connect short cable harness to breakout box, connect power supply +ve lead to pin 3 and -ve lead to pin 14, for motor A. (Connect power supply +ve lead to pin 4 and -ve lead to pin9, for motor B.) These configurations will open the cover

- Set power supply to 28 Volts and 0.5 Amps.
- Switch on power supply
- Allow mechanism to fully open cover and switch off power supply.
- Verify fully open microswitch indicates correct status ofcover.
- Reverse +ve and -ve power supply leads switch on power supply.
- Allow mechanism to fully close cover and switch off power supply.
- Verify fully closed microswitch indicates correct status of cover.
- Set power supply to 0 Volts and 0.5 Amps.
- Reverse +ve and -ve power supply leads switch on power supply.
- Gradually increase voltage of power supply until drive starts to rotate.(Record voltage)
- Switch off power supply, increase voltage of power supply to 28V, switch on power supply.
- Allow mechanism to fully open cover and switch off power supply.
- Verify fully closed microswitch indicates correct status of cover.
- Set power supply to 0 Volts and 0.5 Amps.
- Reverse +ve and -ve power supply leads switch on power supply.
- Gradually increase voltage of power supply until drive starts to rotate.(Record voltage)
- After cover rotates to close position and stalls, gradually increase voltage of power supply until drive starts to rotate.(Record voltage)
- Allow mechanism to fully close cover and switch off power supply.
- Verify fully closed microswitch indicates correct status of cover.
- Repeat the above sequence for motor B.

4.7.2.1 Test results

Open chamber to inspect SVA assembly.
Compare these test results with the baseline functional test results (Para 4.3) and calculate torque margins.

APPENDIX A DETAILED TEST INSTRUCTIONS

Para	Activity	Results	Comments
4.1	**Preliminary Tests** **Perform Motor Assembly burn-in test i.a.w. PO-DIS-MMB-GM-0030** Set up SVA in fixture with cover hinge axis vertical **Determine torque to manually operate mechanism**		
4.1.1	**Preliminary Electrical Tests** Fit saver connector to SVA connector Connect motor flying leads together **Measure terminal resistance of both SVA motors (primary and redundant)** **Verify open and close status of microswitches with respect to cover position** **Measure resistance of thermistors at 20°C** **Measure electrical resistance between cover and baseplate** **Sketch thermistor wiring diagram with pin connections**		
4.2	**Determine Torque Limiting Resistor Value** **(a) Motor A** Connect cable harness to breakout box, connect power supply +ve lead to Pin 3 and –ve lead to Pin 14 **Determine power supply voltage required to initiate drive at 0.5 Amps** Allow mechanism to fully open cover and switch off power supply Reverse +ve and –ve power supply leads, allow mechanism to fully close cover and switch off power supply **Calculate torque limiting resisting value** **(a) Motor B** Connect cable harness to breakout box, connect power supply +ve lead to Pin 4 and –ve lead to Pin 9 **Determine power supply voltage required to initiate drive at 0.5 Amps** Allow mechanism to fully open cover and switch off power supply		

Para	Activity	Results	Comments
4.2	**Cont.** Reverse +ve and –ve power supply leads, allow mechanism to fully close cover and switch off power supply **Calculate torque limiting resisting value**		
4.3	**Baseline Functional Test**		
4.3.1	**Hinge Drive Axis – vertical configuration test** **(a) Motor A** Set power supply to 28 Volts and 0.5 Amps (using EGSE or manually) Switch on power supply, allow mechanism to fully open cover and switch off power supply **Verify fully open microswitch indicates correct status of cover** Reverse +ve and –ve power supply leads, allow mechanism to fully close cover and switch off power supply **Verify fully closed microswitch indicates correct status of cover** Set power supply to 0 Volts and 0.5 Amps Reverse +ve and –ve power supply leads, switch on power supply **Measure minimum operating drive voltage** Switch off power supply, increase power supply voltage to 28 Volts, allow mechanism to fully open cover and switch off power supply **Verify fully closed microswitch indicates correct status of cover** Set power supply to 0 Volts and 0.5 Amps Reverse +ve and –ve power supply leads and switch on power supply **Measure minimum operating drive voltage** **After motor stalls at close position, determine voltage to initiate drive** Allow mechanism to fully close cover and switch off power supply **Verify fully closed microswitch indicates correct status of cover** **(b) Motor B** Set power supply to 28 Volts and 0.5 Amps (using EGSE or manually)		

Para	Activity	Results	Comments
4.3.1	**Cont.** Switch on power supply, allow mechanism to fully open cover and switch off power supply **Verify fully open microswitch indicates correct status of cover** Reverse +ve and –ve power supply leads, allow mechanism to fully close cover and switch off power supply **Verify fully closed microswitch indicates correct status of cover** Set power supply to 0 Volts and 0.5 Amps Reverse +ve and –ve power supply leads, switch on power supply **Measure minimum operating drive voltage** Switch off power supply, increase power supply voltage to 28 Volts, allow mechanism to fully open cover and switch off power supply **Verify fully closed microswitch indicates correct status of cover** Set power supply to 0 Volts and 0.5 Amps Reverse +ve and –ve power supply leads and switch on power supply **Measure minimum operating drive voltage** **After motor stalls at close position, determine voltage to initiate drive** Allow mechanism to fully close cover and switch off power supply **Verify fully closed microswitch indicates correct status of cover**		
4.3.2	**Hinge Drive Axis – horizontal configuration test** **(a) Motor A** Set power supply to 28 Volts and 0.5 Amps (using EGSE or manually) Switch on power supply, allow mechanism to fully open cover and switch off power supply **Verify fully open microswitch indicates correct status of cover** Reverse +ve and –ve power supply leads, allow mechanism to fully close cover and switch off power supply **Verify fully closed microswitch indicates correct status of cover** Set power supply to 0 Volts and 0.5 Amps		

Para	Activity	Results	Comments
4.3.2	**Cont.** Reverse +ve and –ve power supply leads **Measure minimum operating drive voltage** Switch off power supply, increase power supply voltage to 28 Volts, allow mechanism to fully open cover and switch off power supply **Verify fully closed microswitch indicates correct status of cover** Set power supply to 0 Volts and 0.5 Amps Reverse +ve and –ve power supply leads and switch on power supply **Measure minimum operating drive voltage** **After motor stalls at close position, determine voltage to initiate drive** Allow mechanism to fully close cover and switch off power supply **Verify fully closed microswitch indicates correct status of cover** **(b) Motor B** Set power supply to 28 Volts and 0.5 Amps (using EGSE or manually) Switch on power supply, allow mechanism to fully open cover and switch off power supply **Verify fully open microswitch indicates correct status of cover** Reverse +ve and –ve power supply leads, allow mechanism to fully close cover and switch off power supply **Verify fully closed microswitch indicates correct status of cover** Set power supply to 0 Volts and 0.5 Amps Reverse +ve and –ve power supply leads **Measure minimum operating drive voltage** Switch off power supply, increase power supply voltage to 28 Volts, allow mechanism to fully open cover and switch off power supply **Verify fully closed microswitch indicates correct status of cover** Set power supply to 0 Volts and 0.5 Amps Reverse +ve and –ve power supply leads and switch on power supply **Measure minimum operating drive voltage**		

Para	Activity	Results	Comments
4.3.2	**Cont.** **After motor stalls at close position, determine voltage to initiate drive** Allow mechanism to fully close cover and switch off power supply **Verify fully closed microswitch indicates correct status of cover**		
4.5	**Post Vibration Function Test** **(a) Motor A** Set power supply to 28 Volts and 0.5 Amps (using EGSE or manually) Switch on power supply, allow mechanism to fully open cover and switch off power supply **Verify fully open microswitch indicates correct status of cover** Reverse +ve and –ve power supply leads, allow mechanism to fully close cover and switch off power supply **Verify fully closed microswitch indicates correct status of cover** Set power supply to 0 Volts and 0.5 Amps Reverse +ve and –ve power supply leads **Measure minimum operating drive voltage** Switch off power supply, increase power supply voltage to 28 Volts, allow mechanism to fully open cover and switch off power supply **Verify fully closed microswitch indicates correct status of cover** Set power supply to 0 Volts and 0.5 Amps Reverse +ve and –ve power supply leads and switch on power supply **Measure minimum operating drive voltage** **After motor stalls at close position, determine voltage to initiate drive** Allow mechanism to fully close cover and switch off power supply **Verify fully closed microswitch indicates correct status of cover** **(b) Motor B** Set power supply to 28 Volts and 0.5 Amps (using EGSE or manually) Switch on power supply, allow mechanism to fully open cover and switch off		

Para	Activity	Results	Comments
4.5	**Cont.** power supply **Verify fully open microswitch indicates correct status of cover** Reverse +ve and –ve power supply leads, allow mechanism to fully close cover and switch off power supply **Verify fully closed microswitch indicates correct status of cover** Set power supply to 0 Volts and 0.5 Amps Reverse +ve and –ve power supply leads **Measure minimum operating drive voltage** Switch off power supply, increase power supply voltage to 28 Volts, allow mechanism to fully open cover and switch off power supply **Verify fully closed microswitch indicates correct status of cover** Set power supply to 0 Volts and 0.5 Amps Reverse +ve and –ve power supply leads and switch on power supply **Measure minimum operating drive voltage** **After motor stalls at close position, determine voltage to initiate drive** Allow mechanism to fully close cover and switch off power supply **Verify fully closed microswitch indicates correct status of cover**		
4.6 (a)	**Thermal Vacuum Test** **Prior to pump down** **(a) Motor A** Set power supply to 28 Volts and 0.5 Amps (using EGSE or manually) Switch on power supply Allow mechanism to fully open cover and switch off power supply **Verify fully open microswitch indicates correct status of cover** Reverse +ve and –ve power supply leads and switch on power supply Allow mechanism to fully close cover and switch off power supply **Verify fully closed microswitch indicates correct status of cover** Set power supply to 0 Volts and 0.5 Amps		

Para	Activity	Results	Comments
4.6	**Cont.** Reverse +ve and –ve power supply leads and switch on power supply **Measure minimum operating drive voltage** Switch off power, increase voltage to 28 Volts, switch on power supply Allow mechanism to fully open cover and switch off power supply **Verify fully open microswitch indicates correct status of cover** Set power supply to 0 Volts and 0.5 Amps Reverse +ve and –ve power supply leads and switch on power supply **Measure minimum operating drive voltage** After cover rotates to close position and stalls, gradually increase power supply voltage until drive starts to rotate (Record voltage) Allow mechanism to fully close cover and switch off power supply **Verify fully closed microswitch indicates correct status of cover** **(b) Motor B** Set power supply to 28 Volts and 0.5 Amps (using EGSE or manually) Switch on power supply Allow mechanism to fully open cover and switch off power supply **Verify fully open microswitch indicates correct status of cover** Reverse +ve and –ve power supply leads and switch on power supply Allow mechanism to fully close cover and switch off power supply **Verify fully closed microswitch indicates correct status of cover** Set power supply to 0 Volts and 0.5 Amps Reverse +ve and –ve power supply leads and switch on power supply **Measure minimum operating drive voltage** Switch off power, increase voltage to 28 Volts, switch on power supply Allow mechanism to fully open cover and switch off power supply **Verify fully open microswitch indicates correct status of cover** Set power supply to 0 Volts and 0.5 Amps Reverse +ve and –ve power supply leads and switch on power supply		

Para	Activity	Results	Comments
4.6	**Cont.** **Measure minimum operating drive voltage** After cover rotates to close position and stalls, gradually increase power supply voltage until drive starts to rotate (Record voltage) Allow mechanism to fully close cover and switch off power supply **Verify fully closed microswitch indicates correct status of cover**		
(b)	**After cold temperature soak at -25°C** **(a) Motor A** Set power supply to 28 Volts and 0.5 Amps (using EGSE or manually) Switch on power supply Allow mechanism to fully open cover and switch off power supply **Verify fully open microswitch indicates correct status of cover** Reverse +ve and –ve power supply leads and switch on power supply Allow mechanism to fully close cover and switch off power supply **Verify fully closed microswitch indicates correct status of cover** Set power supply to 0 Volts and 0.5 Amps Reverse +ve and –ve power supply leads and switch on power supply **Measure minimum operating drive voltage** Switch off power, increase voltage to 28 Volts, switch on power supply Allow mechanism to fully open cover and switch off power supply **Verify fully open microswitch indicates correct status of cover** Set power supply to 0 Volts and 0.5 Amps Reverse +ve and –ve power supply leads and switch on power supply **Measure minimum operating drive voltage** After cover rotates to close position and stalls, gradually increase power supply voltage until drive starts to rotate (Record voltage) Allow mechanism to fully close cover and switch off power supply **Verify fully closed microswitch indicates correct status of cover**		

Para	Activity	Results	Comments
4.6	**Cont.** **(b) Motor B** Set power supply to 28 Volts and 0.5 Amps (using EGSE or manually) Switch on power supply Allow mechanism to fully open cover and switch off power supply **Verify fully open microswitch indicates correct status of cover** Reverse +ve and –ve power supply leads and switch on power supply Allow mechanism to fully close cover and switch off power supply **Verify fully closed microswitch indicates correct status of cover** Set power supply to 0 Volts and 0.5 Amps Reverse +ve and –ve power supply leads and switch on power supply **Measure minimum operating drive voltage** Switch off power, increase voltage to 28 Volts, switch on power supply Allow mechanism to fully open cover and switch off power supply **Verify fully open microswitch indicates correct status of cover** Set power supply to 0 Volts and 0.5 Amps Reverse +ve and –ve power supply leads and switch on power supply **Measure minimum operating drive voltage** After cover rotates to close position and stalls, gradually increase power supply voltage until drive starts to rotate (Record voltage) Allow mechanism to fully close cover and switch off power supply **Verify fully closed microswitch indicates correct status of cover**		
(c)	**After raising temperature to 25°C** **(a) Motor A** Set power supply to 28 Volts and 0.5 Amps (using EGSE or manually) Switch on power supply Allow mechanism to fully open cover and switch off power supply **Verify fully open microswitch indicates correct status of cover** Reverse +ve and –ve power supply leads and switch on power supply		

Para	Activity	Results	Comments
4.6	**Cont.** Allow mechanism to fully close cover and switch off power supply **Verify fully closed microswitch indicates correct status of cover** Set power supply to 0 Volts and 0.5 Amps Reverse +ve and –ve power supply leads and switch on power supply **Measure minimum operating drive voltage** Switch off power, increase voltage to 28 Volts, switch on power supply Allow mechanism to fully open cover and switch off power supply **Verify fully open microswitch indicates correct status of cover** Set power supply to 0 Volts and 0.5 Amps Reverse +ve and –ve power supply leads and switch on power supply **Measure minimum operating drive voltage** After cover rotates to close position and stalls, gradually increase power supply voltage until drive starts to rotate (Record voltage) Allow mechanism to fully close cover and switch off power supply **Verify fully closed microswitch indicates correct status of cover** **(b) Motor B** Set power supply to 28 Volts and 0.5 Amps (using EGSE or manually) Switch on power supply Allow mechanism to fully open cover and switch off power supply **Verify fully open microswitch indicates correct status of cover** Reverse +ve and –ve power supply leads and switch on power supply Allow mechanism to fully close cover and switch off power supply **Verify fully closed microswitch indicates correct status of cover** Set power supply to 0 Volts and 0.5 Amps Reverse +ve and –ve power supply leads and switch on power supply **Measure minimum operating drive voltage** Switch off power, increase voltage to 28 Volts, switch on power supply Allow mechanism to fully open cover and switch off power supply		

Para	Activity	Results	Comments
4.6	**Cont.** **Verify fully open microswitch indicates correct status of cover** Set power supply to 0 Volts and 0.5 Amps Reverse +ve and –ve power supply leads and switch on power supply **Measure minimum operating drive voltage** After cover rotates to close position and stalls, gradually increase power supply voltage until drive starts to rotate (Record voltage) Allow mechanism to fully close cover and switch off power supply **Verify fully closed microswitch indicates correct status of cover**		
(d)	**At ambient after completion of 4 cycles** **(a) Motor A** Set power supply to 28 Volts and 0.5 Amps (using EGSE or manually) Switch on power supply Allow mechanism to fully open cover and switch off power supply **Verify fully open microswitch indicates correct status of cover** Reverse +ve and –ve power supply leads and switch on power supply Allow mechanism to fully close cover and switch off power supply **Verify fully closed microswitch indicates correct status of cover** Set power supply to 0 Volts and 0.5 Amps Reverse +ve and –ve power supply leads and switch on power supply **Measure minimum operating drive voltage** Switch off power, increase voltage to 28 Volts, switch on power supply Allow mechanism to fully open cover and switch off power supply **Verify fully open microswitch indicates correct status of cover** Set power supply to 0 Volts and 0.5 Amps Reverse +ve and –ve power supply leads and switch on power supply **Measure minimum operating drive voltage** After cover rotates to close position and stalls, gradually increase power supply voltage until drive starts to rotate (Record voltage)		

Para	Activity	Results	Comments
4.6	**Cont.** Allow mechanism to fully close cover and switch off power supply **Verify fully closed microswitch indicates correct status of cover** **(b) Motor B** Set power supply to 28 Volts and 0.5 Amps (using EGSE or manually) Switch on power supply Allow mechanism to fully open cover and switch off power supply **Verify fully open microswitch indicates correct status of cover** Reverse +ve and –ve power supply leads and switch on power supply Allow mechanism to fully close cover and switch off power supply **Verify fully closed microswitch indicates correct status of cover** Set power supply to 0 Volts and 0.5 Amps Reverse +ve and –ve power supply leads and switch on power supply **Measure minimum operating drive voltage** Switch off power, increase voltage to 28 Volts, switch on power supply Allow mechanism to fully open cover and switch off power supply **Verify fully open microswitch indicates correct status of cover** Set power supply to 0 Volts and 0.5 Amps Reverse +ve and –ve power supply leads and switch on power supply **Measure minimum operating drive voltage** After cover rotates to close position and stalls, gradually increase power supply voltage until drive starts to rotate (Record voltage) Allow mechanism to fully close cover and switch off power supply **Verify fully closed microswitch indicates correct status of cover**		

DISTRIBUTION LIST

INTERNAL	EXTERNAL
I K Stewart	N Morris (RAL)
R Coupe	
N Crossland	
S Yardley	

CHANGE RECORD

CHANGE NUMBER	CLASS	CHANGE DETAILS	ISSUE
3164-00306	-	First Issue	1
3164-00328	II	Change in test requirements	2
3164-00334	II	Change in thermal vacuum test cycles	3

MATRA MARCONI SPACE UK

OCCURRENCE REPORT

PROJECT: HIRDLS

CHARGE No. 17143 743002

REF No HR NCR00001 MMS

DATE: 18/1/00

SHEET 1 of

DESCRIPTION: SVA ASSY

EIC:

FOUND DURING: TEST

MODEL: FM

ORIGINATOR NCR No:

DRG/SPEC No: 3164-SA028-TPF

ISSUE: 03

SOURCE CODE:

SUPPLIER: MMS

MANUFACTURER: MMS

TITLE: FM SVA VIBRATION TEST PROCEDURE

BATCH No: AIT01820 80

SERIAL No: FM001

QTY RECEIVED:

QTY ACCEPTED:

SHORT DESCRIPTION OF OCCURRENCE: INCORRECT FREQUENCIES IN RANDOM SPECIFICATION

NON-CONFORMANCE REPORT		REWORK REQUEST		ANOMALY INVESTIGATION		STAMP/SIGN AND DATE ALL ENTRIES
PROV	CONFIRM	PROV	CONFIRM	PROV	CONFIRM	

DETAILS OF OCCURRENCE

Due to clerical error when updating procedure from EM Test Procedure, wrong frequency break points were specified for random vibration test levels shown in Table 4.3-2 of 3164-SA028-TPF. Peak level WAS shown between 50 and 800 Hz. This should be between 160-250 Hz as defined in top level project General Interface Requirements Document (GIRD, Doc No. GSFC-422-11-12-01 Rev 3). Random vibration tests were performed to this modified specification. (Note test levels were defined correctly in FM Test Procedure).

N Goodland 18/1/00

HARDWARE RECOVERY | ACCEPT PAR DATE J. Brown | DEFINED RE DATE | COMPLETE QC DATE

FINAL COUNT | ACCEPT ✓ | REJECT | SCRAP | CONCESS

LEVEL STATUS	REQUIREMENT MET	CLASS	MRB	ECR/EO	OFF LINE INVEST
N-1					
N					
N+1					
N+2					

MODELS AFFECTED STATUS	PROJECT TECHNICAL CLOSURE		
	MODEL	ENGINEERING	PA
	MM		
	EM		
	QM		
	FM	NE	DLB
	GS		
	SPARES		

DEFECT STATISTICS	A	B	C	D	E	F	G	H	J	K	L	M	N	P	Q	R	S	T	U	V	W	X	Y	Z

CLOSURE BY PA/QC:

SIGN: J. G. Brown

DATE: 20/1/00

SS0242

SECTION 3

Test Reports

SVA PIN SURVEY

SOCKET P221 PULG

P221 PULG	Function	Destn	Wire Groups	Wire Type	Comments
11	Screen			3TS24	
14	Winding A Return		Grouped with 14,3	2TS24	**34.1Ω**
3	Winding A Drive		Grouped with 14,3	2TS24	
9	Winding B Return		Grouped with 4,9	2TS22	**33.0Ω**
4	Winding B Drive		Grouped with 4,9	2TS22	
5	SVA Door Fully Closed uSW N.O.	**S/C**	Grouped with 5,10,15	3TS26	**TO PIN 10 (CLOSED)**
10	SVA Door Fully Closed uSW Com		Grouped with 5,10,15	3TS26	
15	SVA Door Fully Closed uSW N.C.	**O/C**	Grouped with 5,10,15	3TS26	**TO PIN 10 (CLOSED)**
8	SVA Door Fully Open uSW N.O.	**S/C**	Grouped with 8,13,2	3TS26	**TO PIN 13 (OPEN)**
13	SVA Door Fully Open uSW Com		Grouped with 8,13,2	3TS26	
2	SVA Door Fully Open uSW N.C.	**O/C**	Grouped with 8,13,2	3TS26	**TO PIN 13 (OPEN)**
6	SVA Motor Temperature A Drive	**OVL'D**	Grouped with 1,6	3TS26	**OK**
1	SVA Motor Temperature A Sense	**1.9 mΩ**	Grouped with 1,6	3TS26	**OK**
12	SVA Motor Temperature B Drive	**OVL'D**	Grouped with 12,7	3TS26	**OK**
7	SVA Motor Temperature B Sense	**1.9 mΩ**	Grouped with 12,7	3TS26	**OK**

Electrical resistance measurement between Cover and Base-plate - 20mΩ.

HIRDLS

TR-MMS-486
(3164-SV013-TRF)
Issue 1

HIGH RESOLUTION DYNAMICS LIMB SOUNDER

Originator: RTS Coupe

Date: 6 February, 2000

Subject/Title: **SVA FM Thermal Vacuum and Functional Test Report**

Description/Summary/Contents:

The Flight Model (FM) Space View Aperture (SVA) Assembly, Serial No. FM001, was subjected to acceptance level thermal vacuum testing and functional checks. All testing was carried out at MMS, Portsmouth.

The objective of the test programme was to demonstrate compliance to the performance requirements in the SVA Subsystem Specification SP-HIR-050D. All testing was carried out in accordance with the Test Procedure TP-MMS-451.

The test results confirm that the SVA has successfully completed the Test Programme without any significant change in operating performance.

Keywords: SVA, FM, Test

Purpose of this Document: SVA FM Assembly T-V and Functional Test Report

Reviewed/Approved by:	IK STEWART		
Date (yy-mm-dd):	00-02-08		

Matra Marconi Space
Anchorage Road
Portsmouth
Hampshire PO3 5PU
England

EOS

ORIGINAL WHEN RED

SVA FM THERMAL VACUUM AND FUNCTIONAL TEST REPORT

Responsible Engineer: ..... Date: 7-2-00

Quality Assurance: ..... Date: 10-2-00

Project Manager: ..... Date: 8-2-00

© MATRA MARCONI SPACE UK LIMITED

THE COPYRIGHT IN THIS DOCUMENT IS THE PROPERTY OF MATRA MARCONI SPACE UK LIMITED. This document is supplied by Matra Marconi Space UK Limited on the express terms that it is to be treated as confidential and that it may not be copied, used or disclosed to others for any purpose except as expressly authorised under the terms of Contract No N2A 3R 0386.

Any person, other than the authorised holder, who finds or otherwise obtains possession of the document, should post it, together with his/her name and address, to the Registry, Matra Marconi Space UK Limited, Anchorage Road, Portsmouth, England, PO3 5PU. Postage will be refunded

CONTENTS

1. INTRODUCTION **4**

1.1 EXECUTIVE SUMMARY 4

1.1.1 SVA Cover Operation Results Summary *4*

2. APPLICABLE DOCUMENTS **5**

3. TEST SPECIMEN **5**

4. TEST SEQUENCE **6**

4.1 PRELIMINARY TESTS 6

4.1.1 Preliminary Electrical Tests *6*

4.2 DETERMINE TORQUE LIMITING RESISTOR VALUE 6

4.3 BASELINE FUNCTIONAL TEST 7

4.3.1 Hinge Drive Axis Vertical *7*

4.3.2 Hinge Drive Axis Horizontal *8*

4.4 VIBRATION TEST 9

4.5 POST VIBRATION FUNCTION TEST 9

4.5.1 Prime Motor *9*

4.5.2 Redundant Motor *10*

4.5.3 Results Summary *10*

4.6 THERMAL VACUUM TESTING (19-31 JANUARY 2000) 10

4.6.1 Thermal Vacuum test results *11*

DISTRIBUTION LIST **12**

CHANGE RECORD **12**

APPENDICES

APPENDIX 1 MOTOR ASSEMBLY BURN-IN TEST (PO-DIS-MMB-GM-0030) **14**

APPENDIX 2 SVA THERMAL VACUUM TEST TEMPERATURE PROFILE **16**

APPENDIX 3 SVA ACCUMULATIVE OPERATIONS LOG SHEET **18**

1. INTRODUCTION

The Flight Model (FM) Space View Aperture (SVA) Assembly, Serial No. FM001, has been subjected to workmanship testing. Both vibration and thermal vacuum testing were carried out at MMS, Portsmouth.

The objective of the testing was to subject the SVA to the workmanship test programme defined in the SVA Subsystem Specification (AD1) and the Test Procedure (AD3), correlate the results with the EM test performance, and verify that the operation was within specification.

This report summarises the thermal vacuum and functional test results, and where applicable, deviations from the procedure. For details of vibration testing refer to AD 5.

1.1 Executive summary

The test results confirm that the SVA has successfully survived the Workmanship test programme without any signifcant change in operating performance.

The major performance parameters are summarised below.

1.1.1 SVA Cover Operation Results Summary

Table 1.1.1-1 summarises the minimum voltage required to drive the motor measured at various stages throughout the test programme. This was determined by gradually increasing motor voltage until the mechanism operates.

Note : The results provided herein summarise SVA operating performance for the zero g configuration which is most representative of in-orbit conditions, i.e. with the cover hinge axis vertical.

Test Operation	Drive Motor	Baseline Test	Post-vibe test	Vacuum @ -25°C	Vacuum @ +25°C	Vacuum @ Ambient
Open cover (from locked position)	Prime	9.3V	9.5V	12V	11.5V	9.8V
	Redundant	10.5V	9.5V	11.8V	11.5V	10V
Start to close cover	Prime	2.4V	2.4V	3.5V	3.5V	3V
	Redundant	2.4V	2.4V	3.5V	3.5V	3V
Fully close cover	Prime	6V	4.5V	8V	8V	6.4V
	Redundant	5.8V	5.3V	10V	7.8V	6.8V

Table 1.1.1-1 SVA Cover Operation Results Summary

The above Table demonstrates consistent performance of the SVA mechanism throughout the test programme and that its' operating characteristics are similar to the EM unit.

Test Operation	Drive Motor	Baseline Test	Post-vibe test	Vacuum @ -25°C	Vacuum @ +25°C	Vacuum @ Ambient
Open cover (from locked position)	Prime	3	2.95	2.33	2.43	2.86
	Redundant	2.66	2.95	2.37	2.43	2.8
Start to close cover	Prime	11	11	8	8	9
	Redundant	11	11	8	8	9
Fully close cover	Prime	4.6	6.2	4.6	3.5	4.4
	Redundant	4.8	5.3	2.8	3.6	4.1

Table 1.1.1-2 SVA Cover Operation Torque Margin Results Summary

Note: Torque Margin for each test is calculated by :- Nominal 28V / operating voltage

"Torque Margin" can also be termed "Torque Ratio".

2. APPLICABLE DOCUMENTS

AD1	SP-HIR-050 Issue D	SVA Subsystem Specification
AD2	HR2L040 Issue 5	SVA Assembly Bill of Materials
AD3	TP-MMS-451 Issue 3	Space View Aperture FM Test Procedure
AD4	TC-MMS-400 Issue 1	Manual for SSH and SVA Test Equipment
AD5	TR-MMS-485 Issue 1	FM SVA Vibration Test Report
AD6	HR.NCR00002.MMS	Occurrence Report for Motor Anomaly
AD7	HR.NCR00003.MMS	Occurrence Report for TV Test Anomaly
AD8	PO-DIS-MMB-GM-0030	Motor Assembly Burn-in Test Procedure
AD9	TC-MMS-465	SVA End Item Data Package

3. TEST SPECIMEN

The unit tested was the SVA FM Serial No FM001 as defined in Bill of Materials AD 2.

4. TEST SEQUENCE

4.1 Preliminary Tests

The torque required to manually operate the mechanism was measured as **1 Nm**.

4.1.1 Preliminary Electrical Tests

The preliminary motor checks were carried out in July 1999 and it was found that the prime motor resistance had increased from 23Ω approx. to 43Ω approx. The investigation is detailed in Occurrence Report HR.NCR00002.MMS (AD 6). A section of the rotor winding was found to be faulty, the motor was replaced and the assembly rebuilt to HR2L004 and tested in accordance with Motor Assembly Burn-in test PO-DIS-MMB-GM-0030 (AD 8). Refer to Appendix 1 for details.
The test procedure was modified to reduce the power supply current limit from 0.5 to 0.4A as a prudent measure to protect the motor windings.

Motor terminal resistance	Prime	**20.9 Ω**
	Redundant	**21.2 Ω**

Microswitches open and close status confirmed.
Resistance of thermistors at 20°C ≅ 1.9MΩ confirmed.
Grounding resistance between cover and baseplate 20 mΩ.

4.2 Determine Torque Limiting Resistor Value

Minimum voltage to fully operate cover	Prime	**5.8 V**
	Redundant	**5.2 V**

Using the following parameters from above, calculate the torque limiting resistor value required to provide a torque margin of x3 when operated at 28V.

- Terminal resistance $R1$ = 21.2 Ω
- Minimum operating voltage $V1$ = 5.8 V

$$\text{Resistor Value} = \left\{\frac{R1 \times 28}{V1 \times 3}\right\} - R1 = \mathbf{12.9\ \Omega}$$

∴ 12 Ω resistor selected for both motor windings

4.3 Baseline Functional Test

This test was carried out to demonstrate the operation of SVA in different configurations and to determine the torque margins for the drive motors prior to environmental testing.

4.3.1 Hinge Drive Axis Vertical

SVA was set up in assembly fixture TAA2127, with cover hinge axis vertical.

4.3.1.1 Prime Motor

Unit was connected by a short cable harness to a break-out box. The power supply was connected, the +ve lead connected to pin 3 and -ve lead to pin 14. (This configuration opened cover using the prime motor).

- Power supply switched on
- Fully open microswitch indicates correct status of cover
- +ve and -ve power supply leads reversed, power supply switched on
- Mechanism cover fully closed and power supply switched off
- Fully closed microswitch indicates correct status of cover
- Power supply set to 0 Volts and 0.4 Amps
- Power supply set to 28 Volts and 0.4 Amps
- +ve and -ve power supply leads reversed, power supply switched on
- Power supply voltage gradually increased until drive starts to rotate at **9.3V**
- Power supply voltage increased to 28V, power supply switched on
- Mechanism cover fully opened and power supply switched off
- Fully opened microswitch indicates correct status of cover
- Power supply set to 0 Volts and 0.4 Amps
- +ve and -ve power supply leads reversed, power supply switched on.
- Power supply voltage gradually increased until drive starts to rotate at **2.4V, and 6V** to overcome axial friction lock
- Power supply voltage increased to 28V, power supply switched on
- Mechanism cover fully closed and power supply switched off
- Fully closed microswitch indicates correct status of cover

4.3.1.2 Redundant Motor

Power supply was then connected, the +ve lead was connected to pin 4 and the -ve lead to pin 9. (This configuration opened cover using the redundant motor).

- Power supply set to 28 Volts and 0.4 Amps
- Power supply switched on
- Fully open microswitch indicates correct status of cover.
- +ve and -ve power supply leads reversed, power supply switched on.
- Mechanism cover fully closed and power supply switched off.
- Fully closed microswitch indicates correct status of cover.
- Power supply set to 0 Volts and 0.4 Amps.
- +ve and -ve power supply leads reversed, power supply switched on.
- Power supply voltage gradually increased until drive starts to rotate at **10.5V**

- Power supply voltage increased to 28V, power supply switched on.
- Mechanism cover fully opened and power supply switched off.
- Fully opened microswitch indicates correct status of cover
- Power supply set to 0 Volts and 0.4 Amps
- +ve and -ve power supply leads reversed, power supply switched on
- Power supply voltage gradually increased until drive starts to rotate at **2.4V, and 5.8V** to overcome axial friction lock
- Power supply voltage increased to 28V, power supply switched on
- Mechanism cover fully closed and power supply switched off
- Fully closed microswitch indicates correct status of cover

4.3.2 Hinge Drive Axis Horizontal

SVA was set up in assembly fixture TAA2127, with cover hinge axis horizontal and the operations detailed in Section 4.3.1 were repeated.

4.3.2.1 Prime Motor

- Power supply set to 28 Volts and 0.4 Amps
- Power supply switched on
- Fully open microswitch indicates correct status of cover
- +ve and -ve power supply leads reversed, power supply switched on
- Mechanism cover fully closed and power supply switched off
- Fully closed microswitch indicates correct status of cover
- Power supply set to 0 Volts and 0.4 Amps
- Power supply set to 28 Volts and 0.4 Amps
- +ve and -ve power supply leads reversed, power supply switched on
- Power supply voltage gradually increased until drive starts to rotate at **10.1V**
- Power supply voltage increased to 28V, power supply switched on
- Mechanism cover fully opened and power supply switched off
- Fully opened microswitch indicates correct status of cover
- Power supply set to 0 Volts and 0.5 Amps
- +ve and -ve power supply leads reversed, power supply switched on
- Power supply voltage gradually increased until drive starts to rotate at **2.3V,** and **9.1V** to overcome axial friction lock
- Power supply voltage increased to 28V, power supply switched on
- Mechanism cover fully closed and power supply switched off
- Fully closed microswitch indicates correct status of cover

4.3.2.2 Redundant Motor

- Power supply set to 28 Volts and 0.4 Amps
- Power supply switched on
- Fully open microswitch indicates correct status of cover.
- +ve and -ve power supply leads reversed, power supply switched on.
- Mechanism cover fully closed and power supply switched off.
- Fully closed microswitch indicates correct status of cover.

- Power supply set to 0 Volts and 0.4 Amps.
- +ve and -ve power supply leads reversed, power supply switched on.
- Power supply voltage gradually increased until drive starts to rotate at **9.2V**
- Power supply voltage increased to 28V, power supply switched on.
- Mechanism cover fully opened and power supply switched off.
- Fully opened microswitch indicates correct status of cover
- Power supply set to 0 Volts and 0.4 Amps
- +ve and -ve power supply leads reversed, power supply switched on
- Power supply voltage gradually increased until drive starts to rotate at **3.0V, and 9.1V** to overcome axial friction lock
- Power supply voltage increased to 28V, power supply switched on
- Mechanism cover fully closed and power supply switched off
- Fully closed microswitch indicates correct status of cover

4.4 Vibration Test

Refer to FM SVA Vibration Test Report TR-MMS-485 (AD 5) for full details of vibration testing.

4.5 Post Vibration Function Test

4.5.1 Prime Motor

SVA was set up in assembly fixture TAA2127, with cover hinge axis vertical. Unit was then connected by a short cable harness to a break-out box. The power supply was connected, the +ve lead connected to pin 3 and -ve lead to pin 14. (This configuration opened cover using the prime motor).

- Power supply set to 28 Volts and 0.4 Amps
- Power supply switched on
- Fully open microswitch indicates correct status of cover
- +ve and -ve power supply leads reversed, power supply switched on
- Mechanism cover fully closed and power supply switched off
- Fully closed microswitch indicates correct status of cover
- Power supply set to 0 Volts and 0.4 Amps
- Power supply set to 28 Volts and 0.4 Amps
- +ve and -ve power supply leads reversed, power supply switched on
- Power supply voltage gradually increased until drive starts to rotate at **9.5V**
- Power supply voltage increased to 28V, power supply switched on
- Mechanism cover fully opened and power supply switched off
- Fully opened microswitch indicates correct status of cover
- Power supply set to 0 Volts and 0.4 Amps
- +ve and -ve power supply leads reversed, power supply switched on
- Power supply voltage increased to 28V, power supply switched on
- Power supply voltage gradually increased until drive starts to rotate at **2.4V, and 4.5V** to overcome axial friction lock
- Power supply voltage increased to 28V, power supply switched on
- Mechanism cover fully closed and power supply switched off

- Fully closed microswitch indicates correct status of cover

4.5.2 Redundant Motor

Power supply was then connected, the +ve lead was connected to pin 4 and the -ve lead to pin 9. (This configuration opened cover using the redundant motor).

- Power supply set to 28 Volts and 0.4 Amps
- Power supply switched on
- Fully open microswitch indicates correct status of cover
- +ve and -ve power supply leads reversed, power supply switched on
- Mechanism cover fully closed and power supply switched off
- Fully closed microswitch indicates correct status of cover
- Power supply set to 0 Volts and 0.4 Amps
- +ve and -ve power supply leads reversed, power supply switched on
- Power supply voltage gradually increased until drive starts to rotate at **9.5V**
- Power supply voltage increased to 28V, power supply switched on
- Mechanism cover fully opened and power supply switched off
- Fully opened microswitch indicates correct status of cover
- Power supply set to 0 Volts and 0.4 Amps
- +ve and -ve power supply leads reversed, power supply switched on
- Power supply voltage gradually increased until drive starts to rotate at **2.4V, and 5.3V** to overcome axial friction lock
- Power supply voltage increased to 28V, power supply switched on
- Mechanism cover fully closed and power supply switched off
- Fully closed microswitch indicates correct status of cover

4.5.3 Results Summary

The drive test results compare favourably with the baseline test. They show no significant change in operating characteristics and demonstrate repeatability of all functions for both motors.

4.6 Thermal Vacuum Testing (19-31 January 2000)

The FM unit has been tested in vacuum ($<1*10^{-5}$ mBar) at its upper and lower Acceptance temperature limits and operated by test bench electronics (EGSE Ref. AD4).

The SVA was mounted in the test chamber with the motor axis vertical and functional tests were performed at the following stages :

- prior to closing chamber (to verify harness)
- at -25°C
- at +25°C
- at ambient temperature (after 4 thermal cycles)

For the final test, the unit was still under vacuum at ambient temperature. On the second operation to open the cover at 28V, the power supply tripped at the current limit of 0.4A. The investigation is detailed in Occurrence Report HR.NCR00003.MMS (AD 7).

The chamber was opened and diagnostic checks revealed that the mechanism could have locked axially due to a small operating clearance found in the lost motion drive. This clearance was adjusted and noted in the Occurrence Report. However, tests and checks revealed this locking was very unlikely to occur.

The current limit was reset to the procedure value of 0.5 A. (The current limit was set purely for in-house protection of the motors during their assembly and integration sequence).

Following adjustment of this clearance, the Thermal Vacuum test was repeated.

Refer to Appendix 2 for thermal vacuum temperature cycling details.

4.6.1 Thermal Vacuum test results

Test Operation	Drive Motor	Baseline Test	Post-vibe test	Vacuum @ -25°C	Vacuum @ +25°C	Vacuum @ Ambient
Open cover (from locked position)	Prime	9.3V	9.5V	12V	11.5V	9.8V
	Redundant	10.5V	9.5V	11.8V	11.5V	10V
Start to close cover	Prime	2.4V	2.4V	3.5V	3.5V	3V
	Redundant	2.4V	2.4V	3.5V	3.5V	3V
Fully close cover	Prime	6V	4.5V	8V	8V	6.4V
	Redundant	5.8V	5.3V	10V	7.8V	6.8V

All AD590 thermistors operated satisfactorily.
SVA was inspected and no obvious degradation or damage was noted. All operations were nominal at temperature extremes.
The above table demonstrates the SVA mechanism performance has not changed during the test programme and its operating characteristics are similar to the EM unit.

DISTRIBUTION LIST

INTERNAL	EXTERNAL
I Stewart	N Morris (RAL)
RTS Coupe	
N Crossland	

CHANGE RECORD

CHANGE NUMBER	CLASS	CHANGE DETAILS	ISSUE
3164- 00361	-	First Issue	1

APPENDICES

APPENDIX 1 - Motor Assembly Burn-in test (PO-DIS-MMB-GM-0030)

APPENDIX 2 - SVA Thermal Vacuum Test operations log

APPENDIX 3 - SVA Accumulative Operations Log sheet

APPENDIX 1 MOTOR ASSEMBLY BURN-IN TEST (PO-DIS-MMB-GM-0030)

Refer to End Item Data Pack TC-MMS-465, Section 4 for details

APPENDIX 2 SVA THERMAL VACUUM TEST TEMPERATURE PROFILE

FM SVA Thermal Vacuum Re-test Temperature Profile

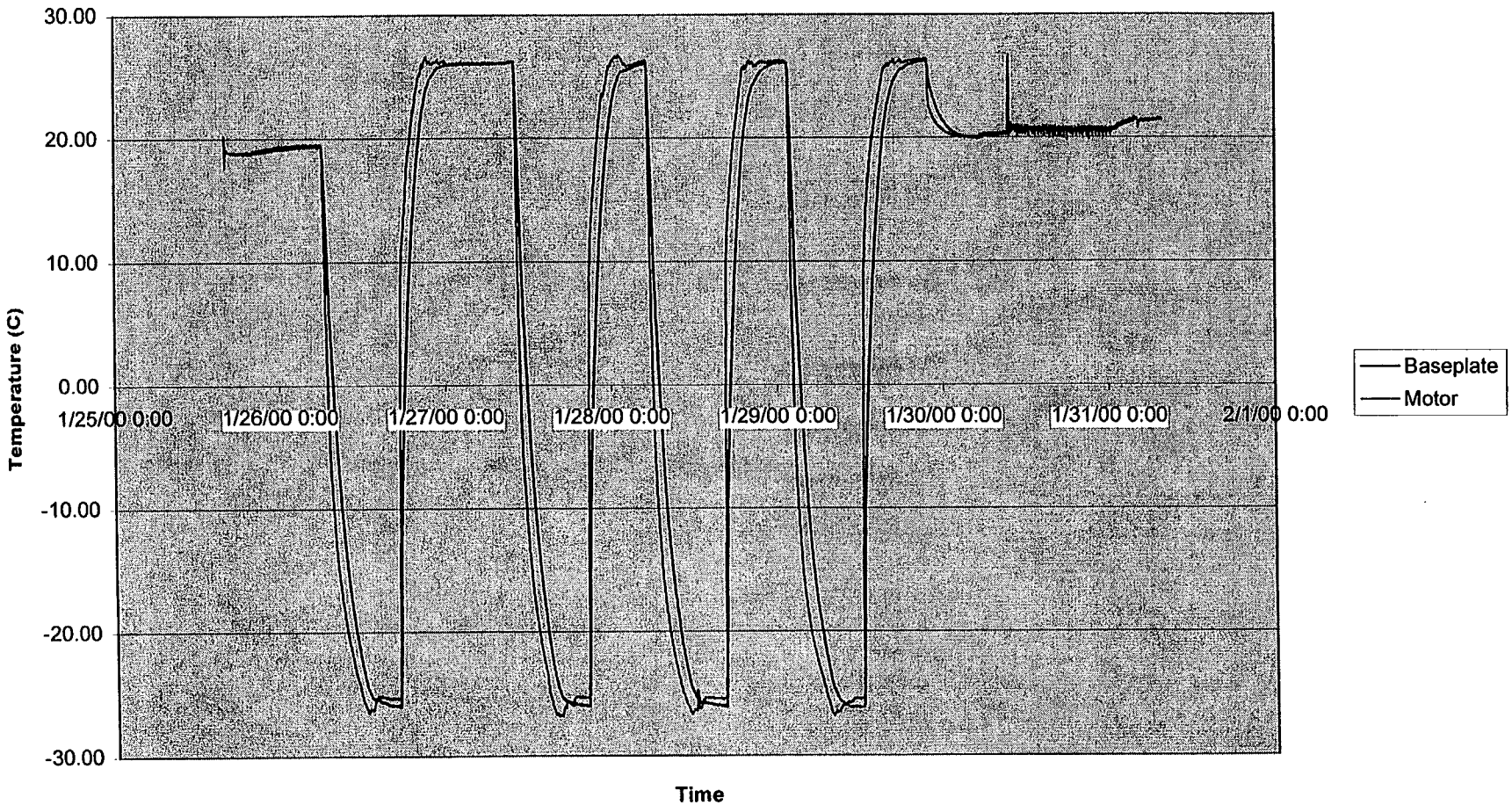

APPENDIX 3 SVA ACCUMULATIVE OPERATIONS LOG SHEET

SVA Operations Log Serial No. FM 001

No. Operations	Activity	Engineer	Date
8	MANUAL OPERATIONS	KTSC	20-7-99
6	Preliminary Electrical Tests	KTSC	5-1-00
8	Baseline Functional Test	KTSC	5-1-00
4	Post Vibration Funct. Test	KTSC	19-1-00
4	Thermal-Vacuum @ -25°C	KTSC	20-1-00
4	" " " +25°C	KTSC	20-1-00
4	" " " AMBIENT	KTSC	24-1-00
4	Thermal-Vacuum @ AMBIENT	KTSC	25-1-00
4	" " @ -25°C	KTSC	26-1-00
4	" " @ +25°C	KTSC	27-1-00
4	" " @ AMBIENT	KTSC	30-1-00

REPEAT TV TEST

Note 1 Operation = Open and Close

HIRDLS

TR-MMS-485
(3164-SV012-TRF)
Issue 1

HIGH RESOLUTION DYNAMICS LIMB SOUNDER

Originator: N Crossland Date: 18 January, 2000

Subject/Title: **FM SVA Vibration Test Report**

Description/Summary/Contents:

The Space View Aperture (SVA) Mechanism Flight Model (FM) has been successfully subjected to workmanship level vibration testing.

Keywords: SVA, FM, Vibration

Purpose of this Document: SVA Test Report

Reviewed/Approved by:			
Date (yy-mm-dd):	00 - 02 - 01		

Matra Marconi Space
Anchorage Road
Portsmouth
Hampshire PO3 5PU
England

EOS

ORIGINAL WHEN RED

SPACE VIEW APERTURE (SVA) ASSEMBLY
FLIGHT MODEL (FM)
VIBRATION TEST REPORT

Responsible Engineer: N Grossland Date: 31 Jan 2000

Quality Assurance: D. G. Bradley Date: 10th Feb. 2000

Project Manager: [signature] Date: 1 Feb. 00

© MATRA MARCONI SPACE UK LIMITED

THE COPYRIGHT IN THIS DOCUMENT IS THE PROPERTY OF MATRA MARCONI SPACE UK LIMITED. This document is supplied by Matra Marconi Space UK Limited on the express terms that it is to be treated as confidential and that it may not be copied, used or disclosed to others for any purpose except as expressly authorised under the terms of Contract No N2A 3R 0386.

Any person, other than the authorised holder, who finds or otherwise obtains possession of the document, should post it, together with his/her name and address, to the Registry, Matra Marconi Space UK Limited, Anchorage Road, Portsmouth, England, PO3 5PU. Postage will be refunded.

CONTENTS

1. SUMMARY 4

2. INTRODUCTION 4

3. APPLICABLE DOCUMENTS 4

4. TEST ITEM 4

5. TEST LOCATION AND EQUIPMENT 5

5.1 TEST LOCATION 5
5.2 TEST EQUIPMENT 5

6. VIBRATION TEST SEQUENCE 6

7. VIBRATION TESTS 7

7.1 JIG SURVEY 7
7.2 LOW LEVEL SINE SURVEY 7
7.3 WORKMANSHIP LEVEL RANDOM TEST 7

8. RESULTS 8

9. CONCLUSIONS 9

TABLE OF FIGURES

FIGURE 1 TEST ITEM MONITORING EQUIPMENT 10
FIGURE 2 PRE AND POST WORKMANSHIP TEST LOW LEVEL SINE RESPONSES – POSITION 1Y IN-AXIS 11
FIGURE 3 PRE AND POST WORKMANSHIP TEST LOW LEVEL SINE RESPONSES – POSITION 2Y IN-AXIS 12
FIGURE 4 PRE AND POST WORKMANSHIP TEST LOW LEVEL SINE RESPONSES – POSITION 3Y IN-AXIS 13
FIGURE 5 PRE AND POST WORKMANSHIP TEST LOW LEVEL SINE RESPONSES – POSITION 4Y IN-AXIS 14
FIGURE 6 PRE AND POST WORKMANSHIP TEST LOW LEVEL SINE RESPONSES – POSITION 1X IN-AXIS 15
FIGURE 7 PRE AND POST WORKMANSHIP TEST LOW LEVEL SINE RESPONSES – POSITION 2X IN-AXIS 16
FIGURE 8 PRE AND POST WORKMANSHIP TEST LOW LEVEL SINE RESPONSES – POSITION 3X IN-AXIS 17
FIGURE 9 PRE AND POST WORKMANSHIP TEST LOW LEVEL SINE RESPONSES – POSITION 4X IN-AXIS 18
FIGURE 10 PRE AND POST WORKMANSHIP TEST LOW LEVEL SINE RESPONSES – POSITION 1Z IN-AXIS 19
FIGURE 11 PRE AND POST WORKMANSHIP TEST LOW LEVEL SINE RESPONSES – POSITION 2Z IN-AXIS 20
FIGURE 12 PRE AND POST WORKMANSHIP TEST LOW LEVEL SINE RESPONSES – POSITION 3Z IN-AXIS 21
FIGURE 13 PRE AND POST WORKMANSHIP TEST LOW LEVEL SINE RESPONSES – POSITION 4Z IN-AXIS 22
FIGURE 14 ENVIRONMENTAL TEST CERTIFICATE 23
DISTRIBUTION LIST 24
CHANGE RECORD 24

1. SUMMARY

This report summarises the workmanship level vibration tests performed on the HIRDLS Space View Aperture (SVA) Assembly Flight Model (FM) .

The test results show that the unit has a first natural frequency of approximately 159 Hz which satisfies the 120 Hz minimum stiffness requirement.

The unit completed workmanship level vibration testing with no detectable structural degradation. No inexplicable variations were detected in the results of the low level sine surveys performed before, during, and after any of the tests.

2. INTRODUCTION

The HIRDLS SVA has been subjected to workmanship level vibration tests. The findings are reported herein.

The purpose of the tests is to demonstrate the ability of the unit to withstand the vibration loads defined in the Requirements Specification (AD 1) and Test Procedure (AD 3) and to confirm that the unit satisfies the specified minimum stiffness requirement.

3. APPLICABLE DOCUMENTS

AD 1	SP-HIR-50 Issue D	Sunshield Subsystem Requirements Specification
AD 2	HR2L040 Issue 05	Space View Aperture Assembly BOM
AD 3	TP-MMS-451 Issue 3	Space View Aperture Assembly FM Test Procedure
AD 4	IL2712	HIRDLS SVA FM Vibration Test Log Book
AD 5	HDRLS-PA-018	SVA FM Test Readiness Review Minutes
AD 6	TR-MMS-424 Issue A	EM SVA Vibration Test Report

4. TEST ITEM

The test item is the SVA FM as defined in Bill of Materials AD 2. Figure 1 shows the location of the 4 tri-axial accelerometers used to monitor unit responses and defines the test axes.

Testing was carried out in accordance with the Test Procedure (AD 3) and amendments agreed during the Test Readiness Review (TRR) and recorded in AD 5.

5. TEST LOCATION AND EQUIPMENT

5.1 Test Location

The SVA FM was subjected to qualification level testing in the Environmental Test Laboratory, MMS, Portsmouth, England, over the period 18–19 January 2000.

5.2 Test Equipment

Repeat testing was performed using the Derritron VP2500 vibrator for the vertical (Z) axis and the Derritron VP1200 vibrator for the 2 lateral axes.

The Genrad Spectral Dynamics 2552B controller was used for both sine and random vibration testing. A 2 point average control strategy was adopted; the 2 points being at opposite diagonal corners of the vibration jig.

Endevco accelerometers and Kistler charge amplifiers were used to monitor and control the tests. All data was stored and subsequently analysed on the Cranfield Data Systems EDASP 7610 data analyser.

A full equipment list and calibration data is contained in the Environmental Test Log Books (AD 4) which is available for examination at the location detailed in Section 5.1.

6. VIBRATION TEST SEQUENCE

Workmanship level vibration testing was carried out in accordance with the sequence specified in Table 6-1.

Test No	Description	Axis	Table
1	Jig survey	Y	7.1-1
2	Low level sine survey	Y	7.1-1
5	Workmanship level random	Y	7.3-1
6	Low level sine survey	Y	7.1-1
7	Jig survey	X	7.1-1
8	Low level sine survey	X	7.1-1
11	Workmanship level random	X	7.3-1
12	Low level sine survey	X	7.1-1
13	Jig survey	Z	7.1-1
14	Low level sine survey	Z	7.1-1
17	Workmanship level random	Z	7.3-1
18	Low level sine survey	Z	7.1-1

Table 6-1 Workmanship Vibration Test Sequence

7. VIBRATION TESTS

7.1 Jig Survey

Vibration jig surveys were performed by a single sweep increasing in frequency as defined in Table 7.1-1.

AXIS	FREQUENCY (Hz)	ACCELERATION	SWEEP RATE (Oct/min)
ALL	5 - 2000	± 0.2g	2

Table 7.1-1 Jig and Low Level Sine Survey

7.2 Low Level Sine Survey

Low level sine surveys were performed by a single sweep increasing in frequency as defined in Table 7.1-1.

7.3 Workmanship Level Random Test

Workmanship level random vibration testing was performed to the levels and duration defined in Table 7.3-1.

AXIS	FREQUENCY (Hz)	PSD (g^2/Hz)	DURATION
ALL	20 20 – 160 160 - 250 250 - 2000 2000	0.01 +3 dB / octave 0.08 -3 dB / octave 0.01	1 minute
	Overall	7.4g RMS	

Table 7.3-1 Workmanship Random Vibration Levels

8. RESULTS

A complete record of all test data is available for examination at the location detailed in Section 5.1.

The following occurrence report covers deviations observed during testing :-

HR.NCR.00001.MMS Incorrect frequencies in random specification

Corrected frequency break points were authorised for random vibration testing. Due to a clerical error, the break points defined in the Test Procedure were not in accordance with those defined in the General Interface Requirements Document (GIRD).

Also reported are changes in low level sine survey responses performed before and after the initial, Y axis, workmanship test. These were accepted on the basis that the mechanism includes a compressed tubular seal, pre-tensioned springs, and several moving parts and hence, would be susceptible to a 'settling-in' process. No significant changes were observed during X and Z axis testing. This initial 'settling-in' phenomenon was noted during the initial EM tests (refer to AD 6).

Several response plots are included herein as Figures 2 – 19.

Overall Grms levels for Positions 1 (Door) and 3 (Motor) are summarised in Table 8-1 below.

	Overall level (G_{rms})	
Test axis	Posn 1	Posn 3
X	10.13	27.83
Y	23.11	14.57
Z	12.19	25.67

Table 8-1 Mechanism Vibration Levels

9. CONCLUSIONS

1. The SVA FM has been shown to have a first natural frequency of approximately 159 Hz which satisfies the minimum stiffness requirement of 120 Hz. This correlates well with the EM Qualification unit first frequency of 154 Hz (refer to AD 6).

2. The SVA FM has been subjected to workmanship level vibration tests without detectable mechanical failure.

3. No inexplicable variations were detected in the results of the low level sine surveys performed before, during and after any of the tests.

4. The SVA FM has been successfully subjected to workmanship level vibration tests in each of the 3 axes. The Environmental Test Certificate is included as Figure 14.

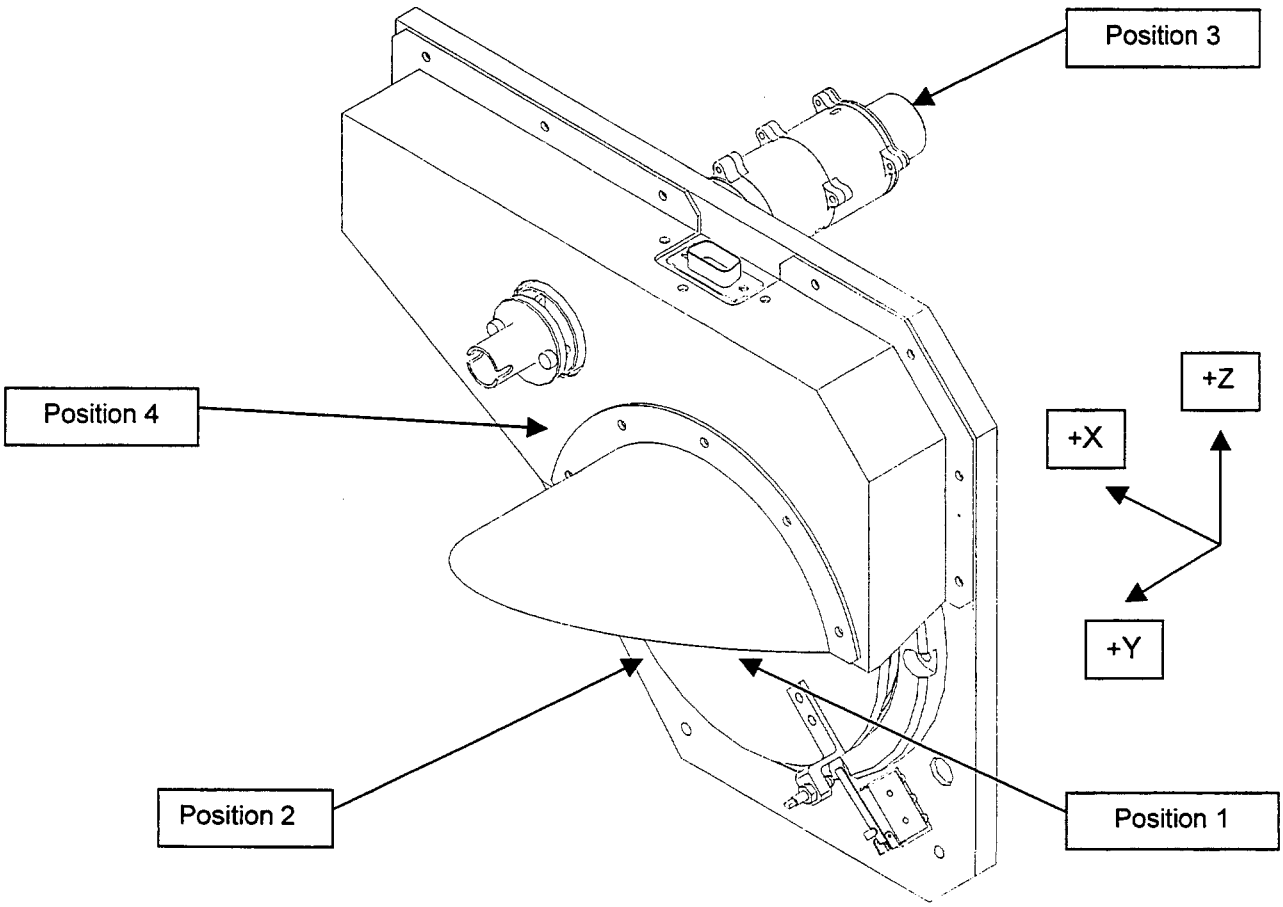

Position 1	Door
Position 2	Baseplate
Position 3	Motor
Position 4	Cover

Figure 1 Test Item Monitoring Equipment

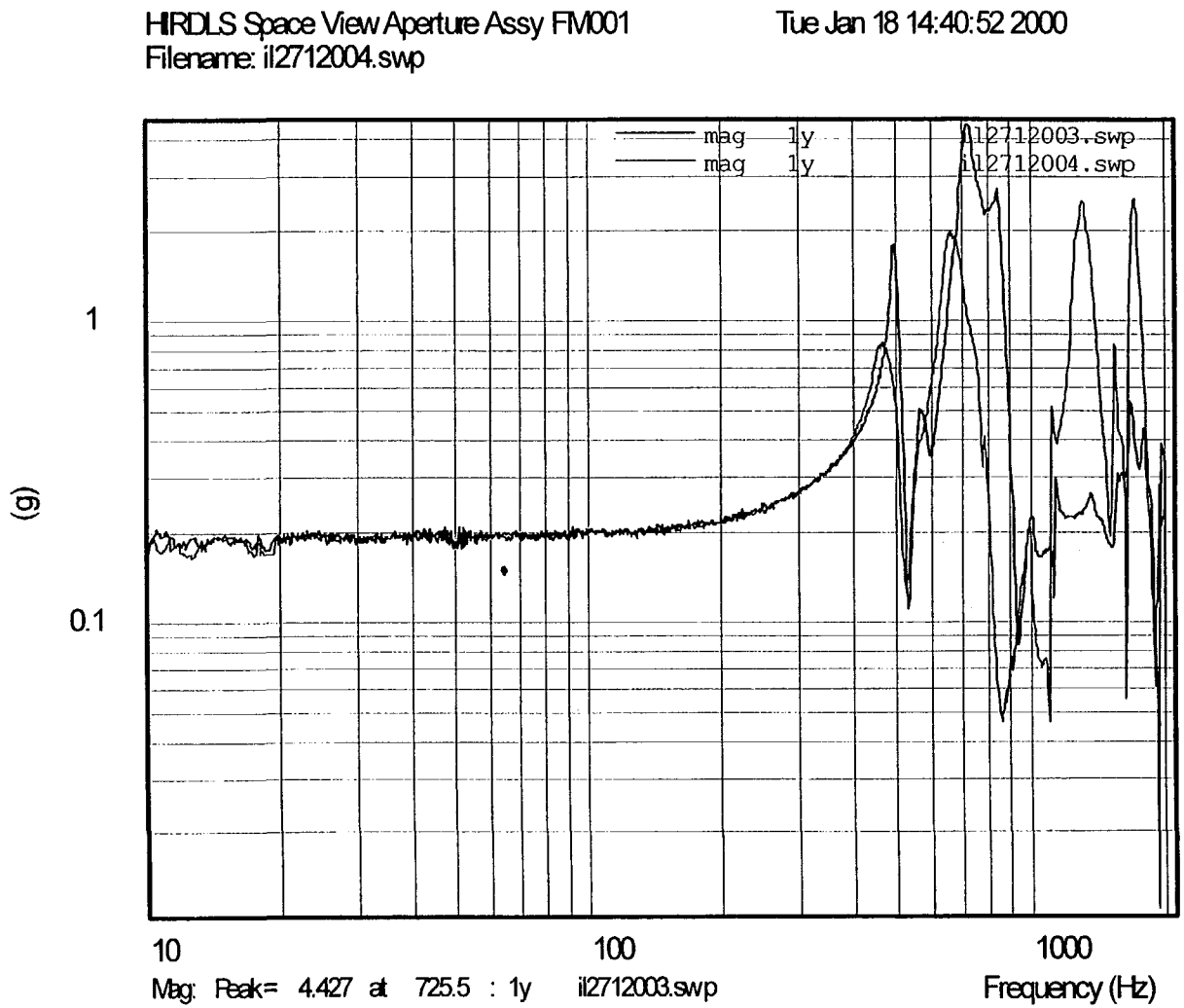

Figure 2 **Pre and Post Workmanship Test low level sine responses – Position 1y in-axis**

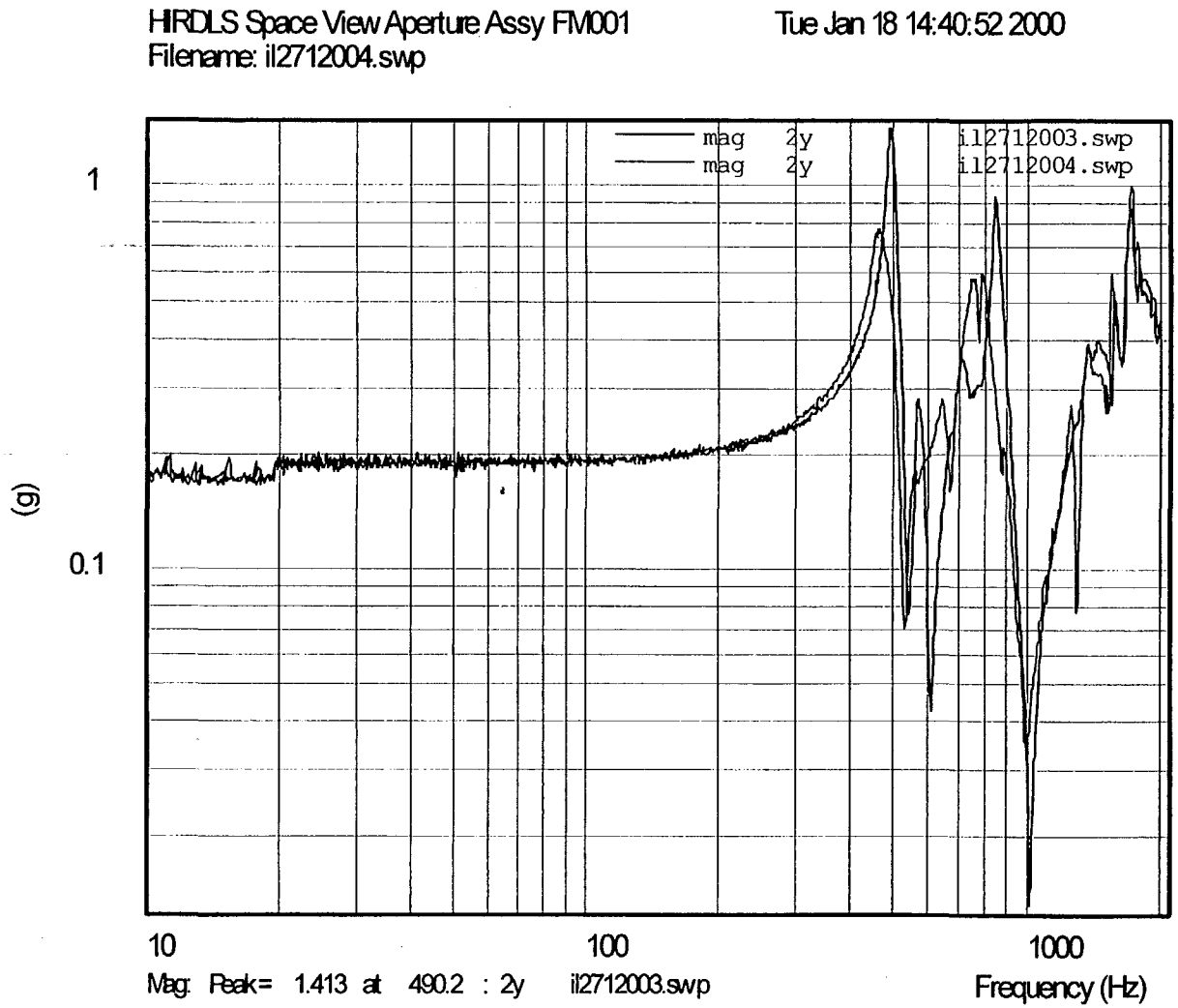

Figure 3 **Pre and Post Workmanship Test low level sine responses – Position 2y in-axis**

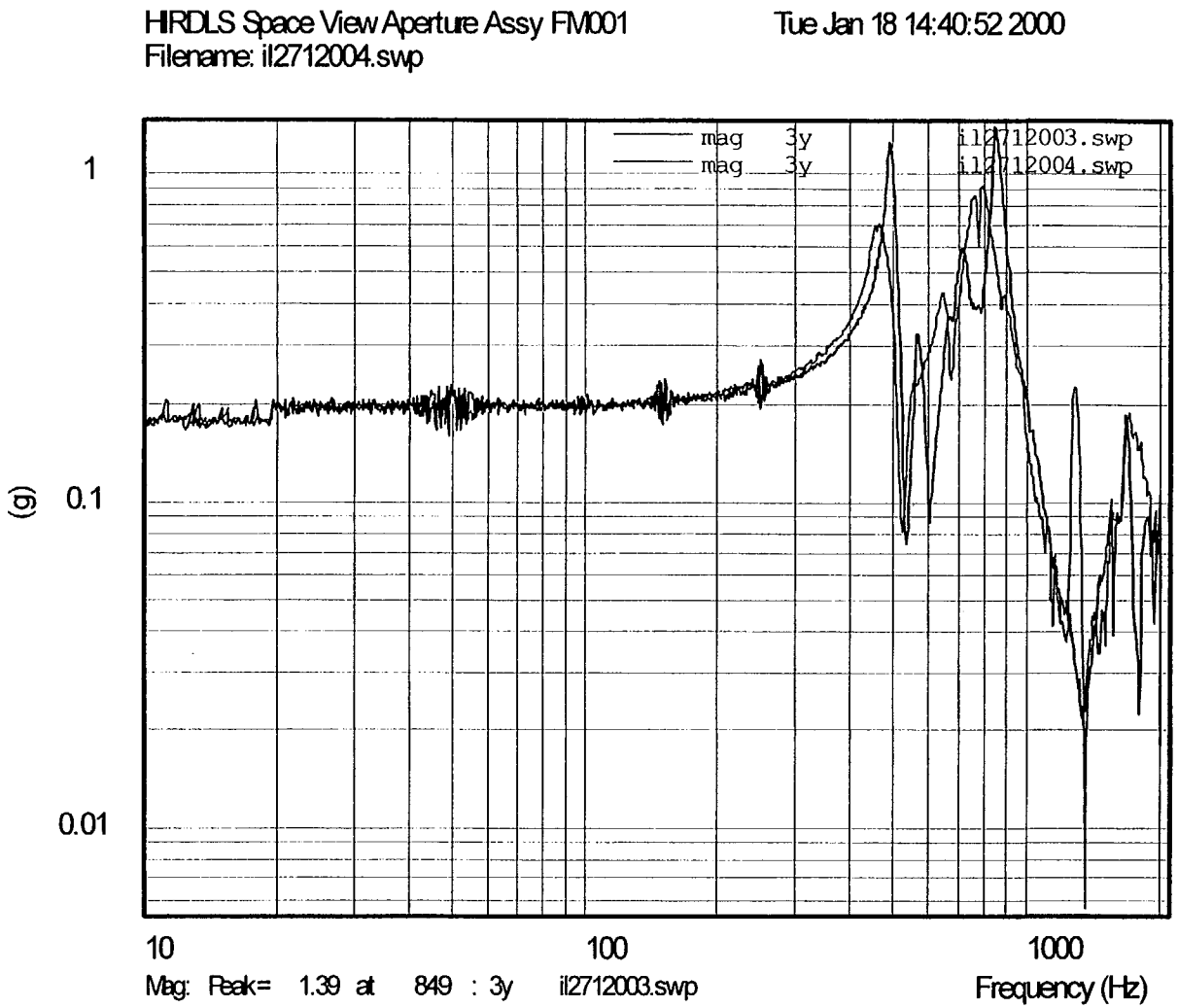

Figure 4 **Pre and Post Workmanship Test low level sine responses – Position 3y in-axis**

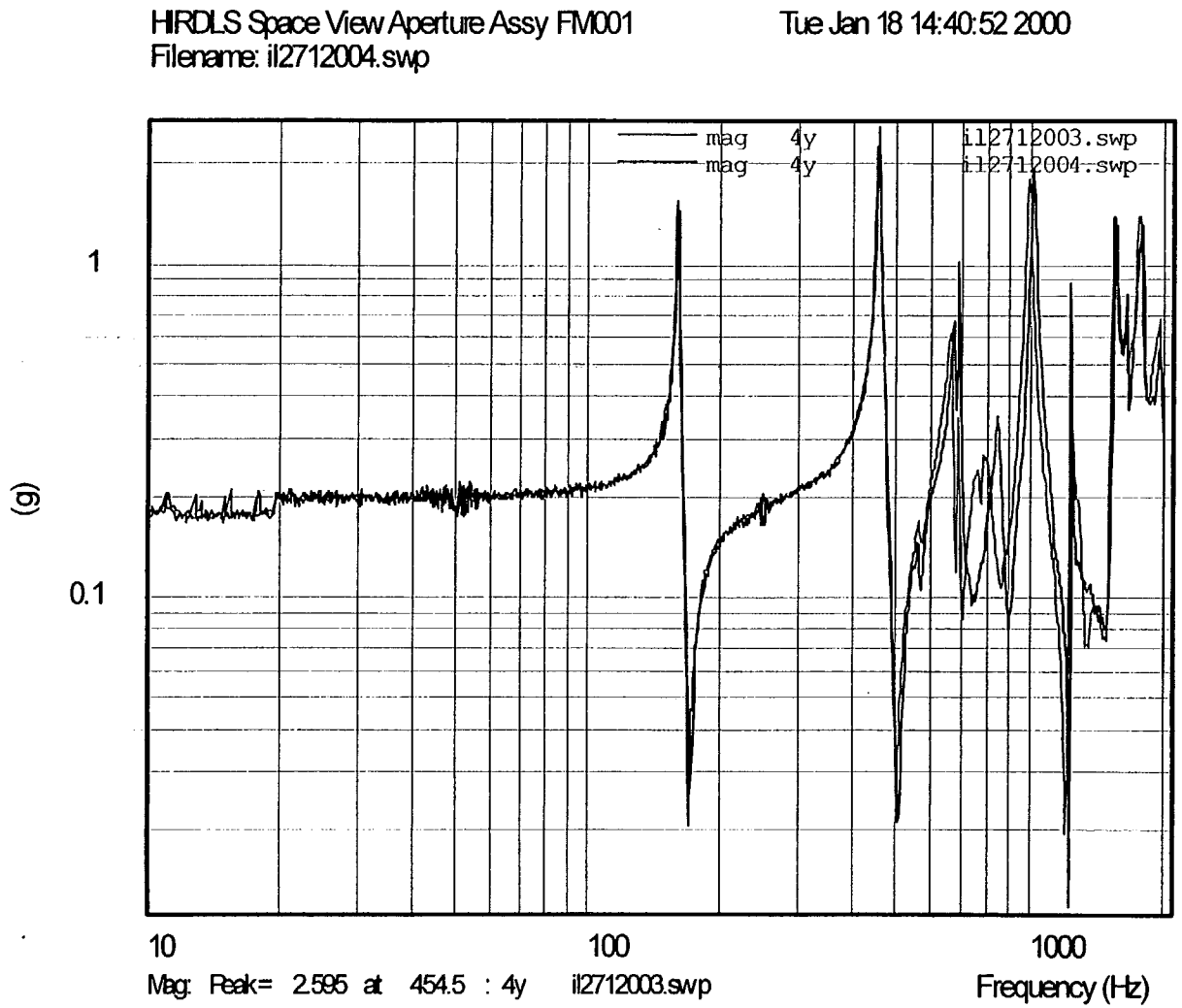

Figure 5 Pre and Post Workmanship Test low level sine responses – Position 4y in-axis

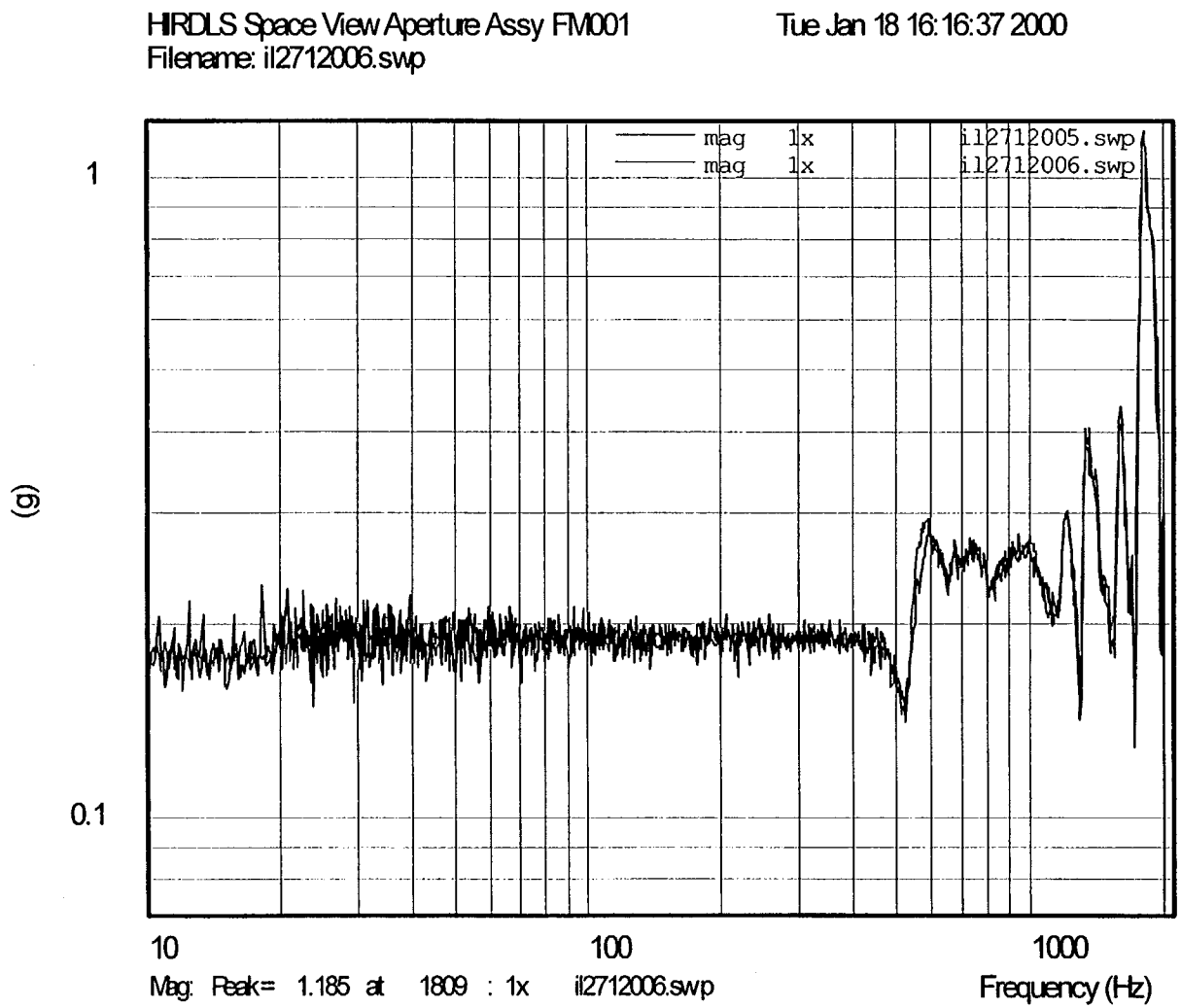

Figure 6 Pre and Post Workmanship Test low level sine responses – Position 1x in-axis

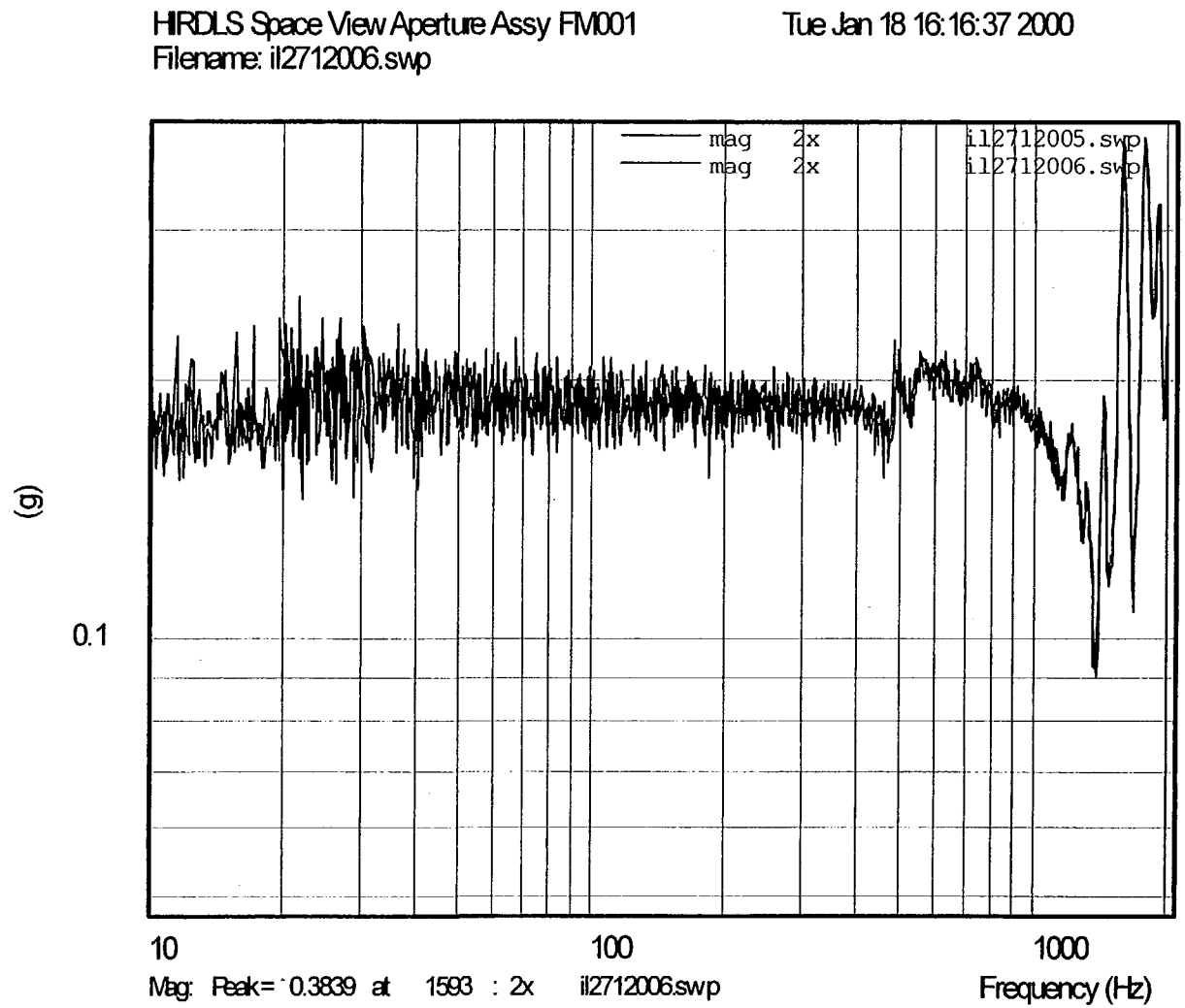

Figure 7 **Pre and Post Workmanship Test low level sine responses – Position 2x in-axis**

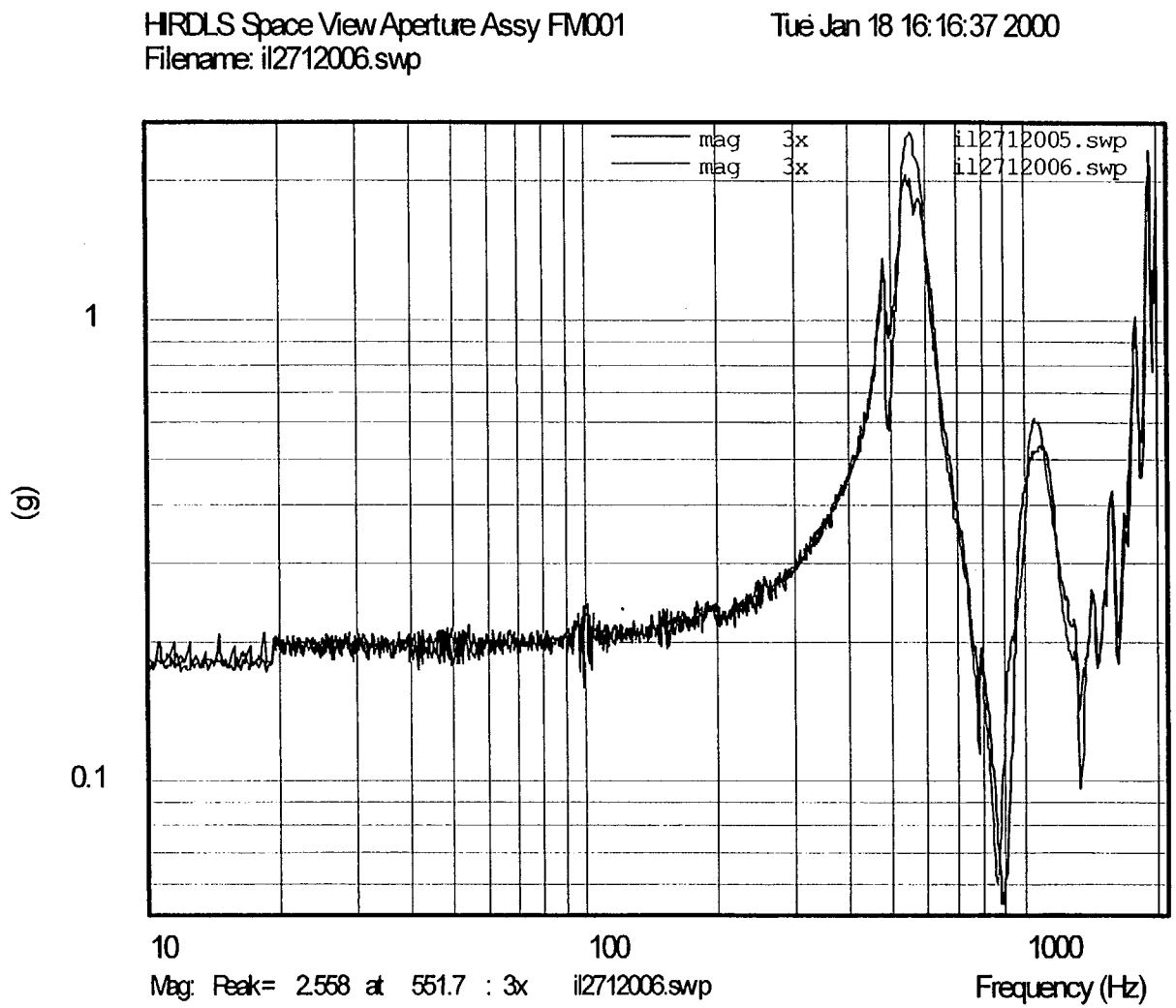

Figure 8 Pre and Post Workmanship Test low level sine responses – Position 3x in-axis

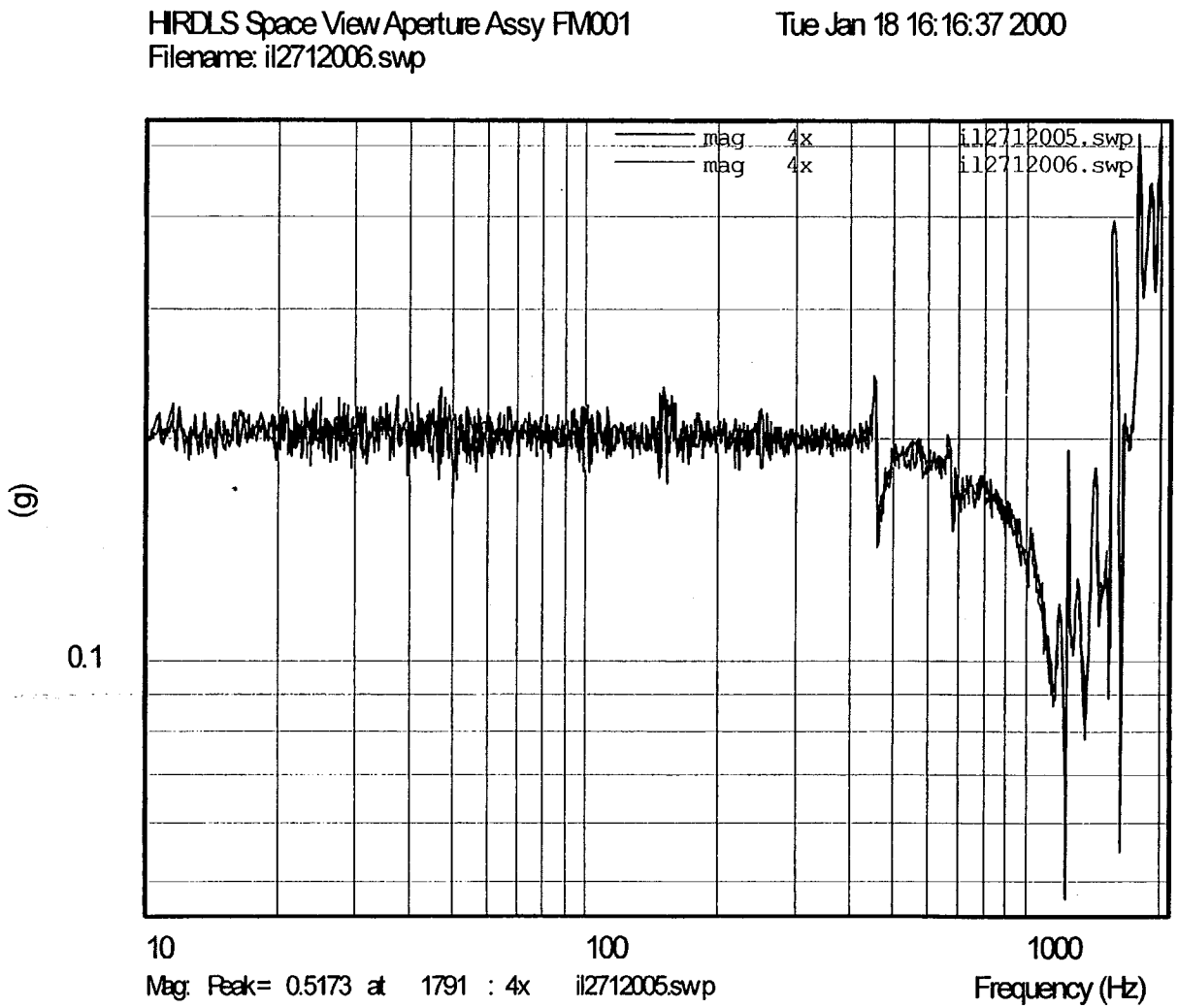

Figure 9 Pre and Post Workmanship Test low level sine responses – Position 4x in-axis

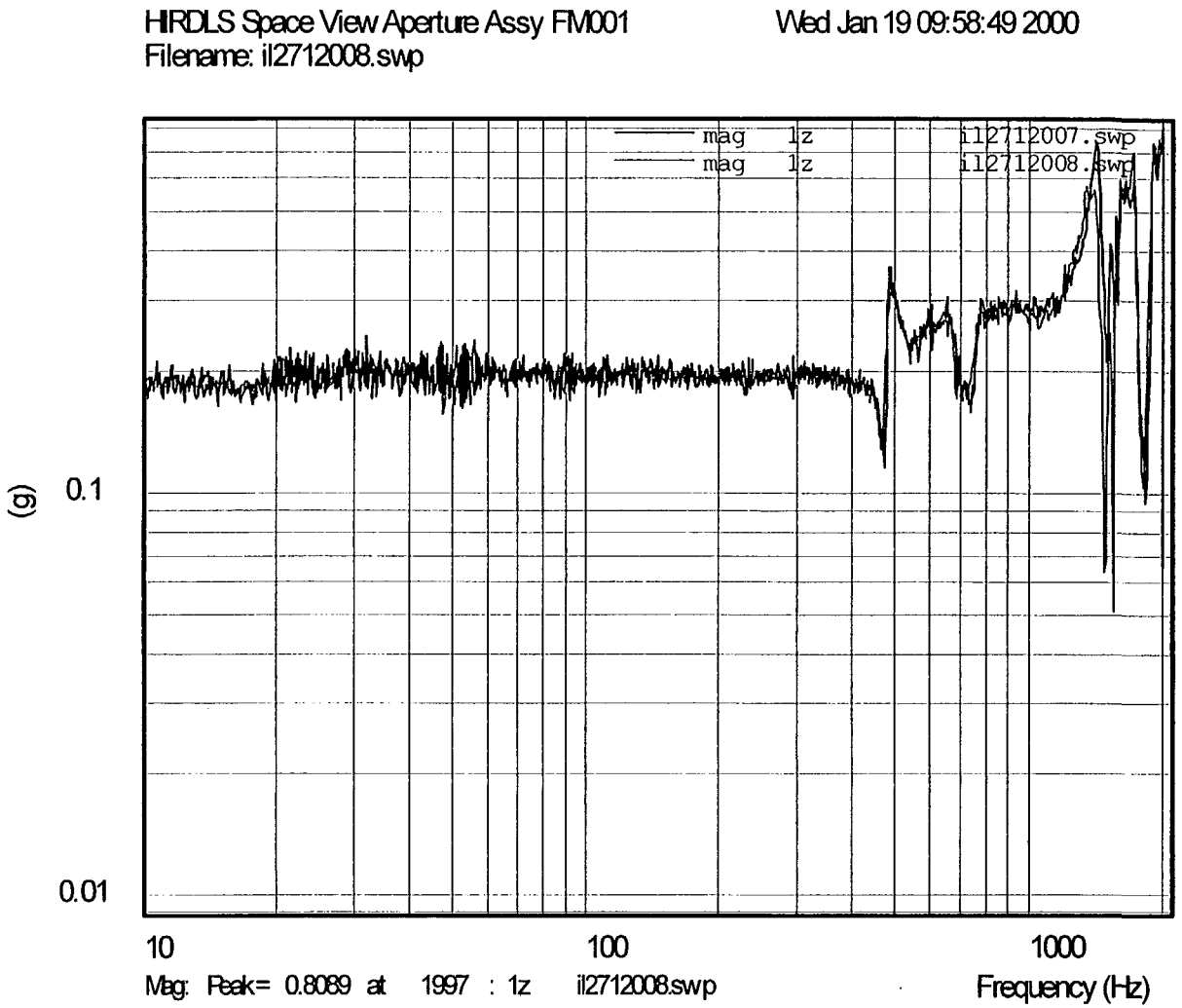

Figure 10 Pre and Post Workmanship Test low level sine responses – Position 1z in-axis

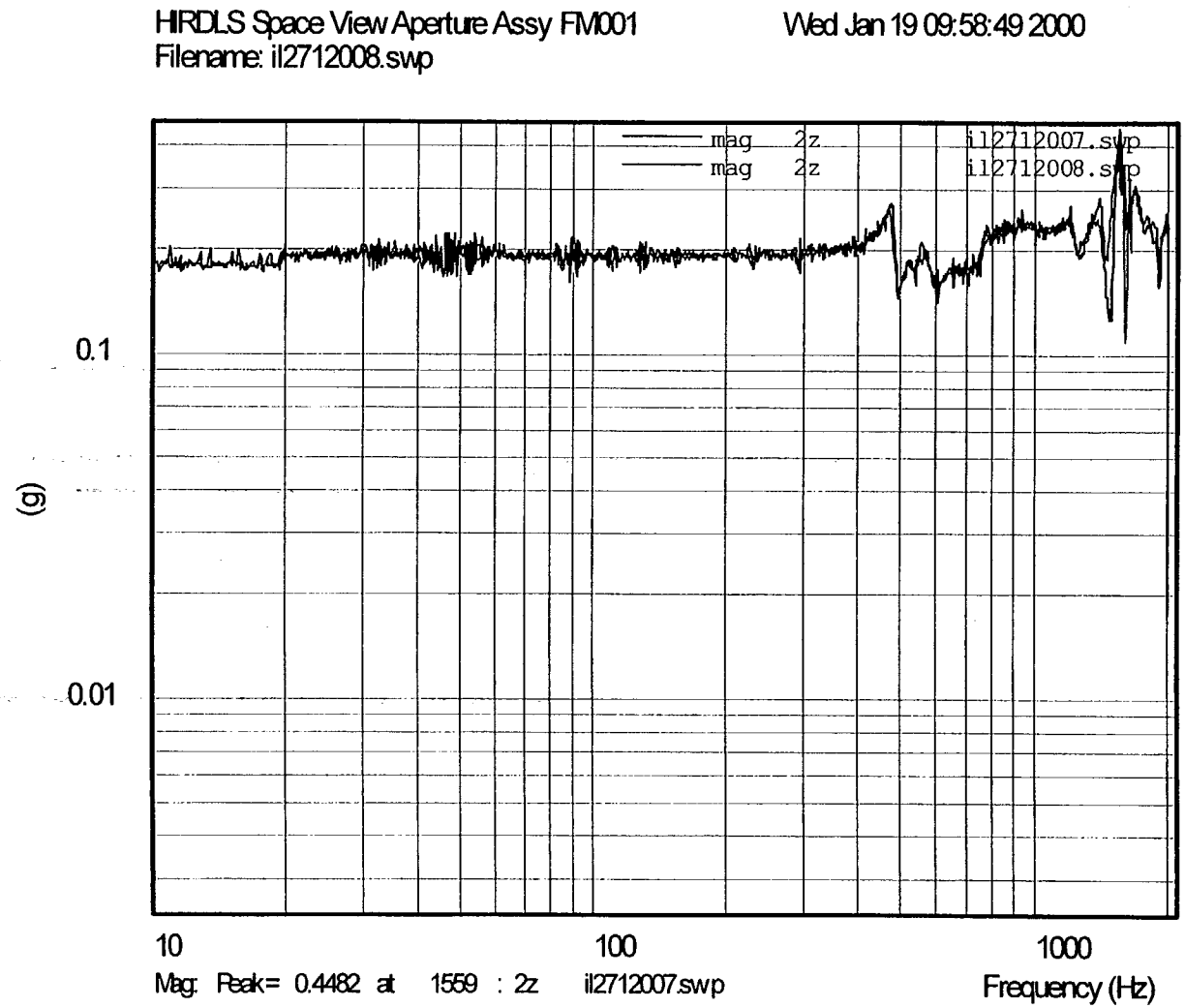

Figure 11 Pre and Post Workmanship Test low level sine responses – Position 2z in-axis

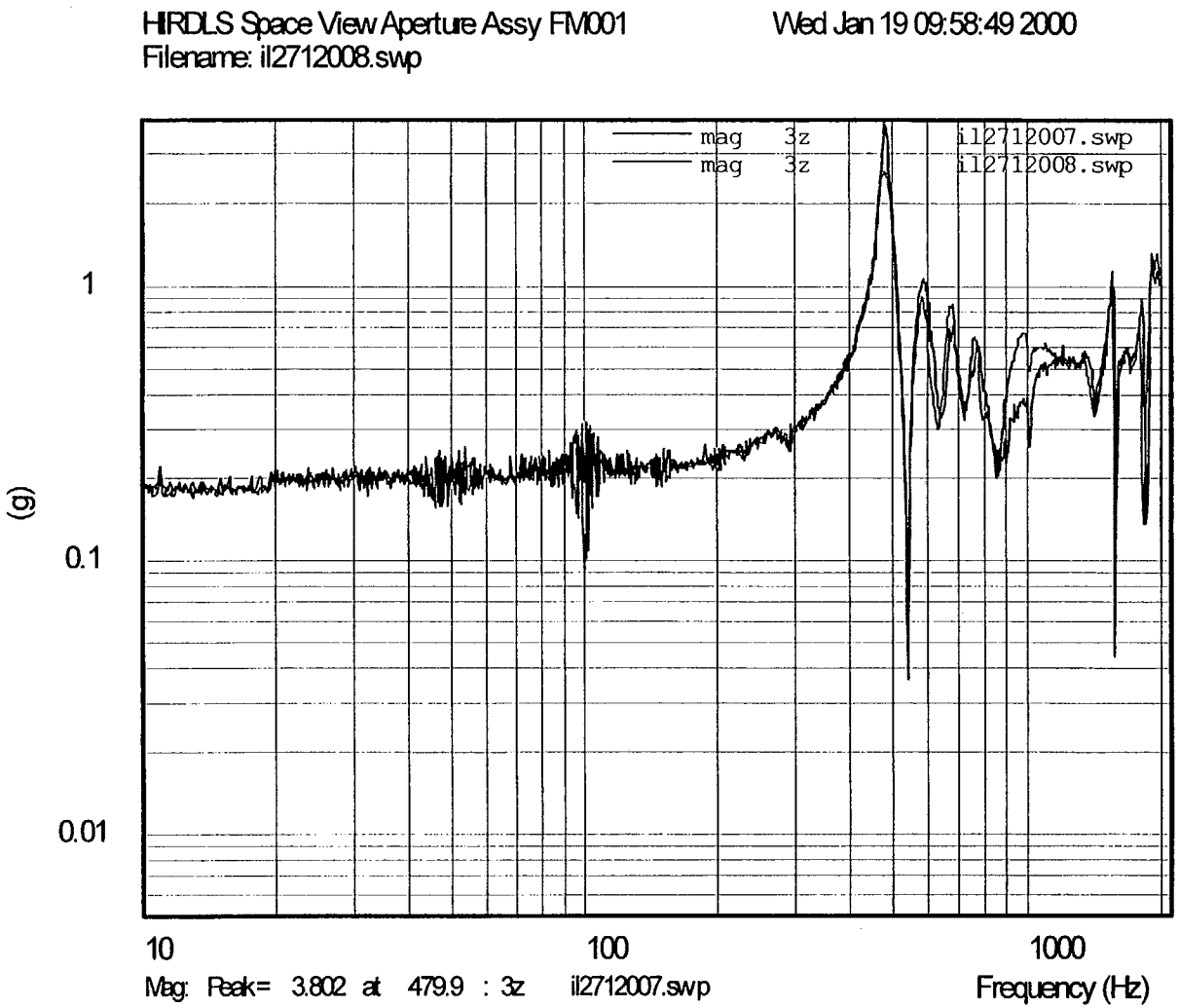

Figure 12 Pre and Post Workmanship Test low level sine responses – Position 3z in-axis

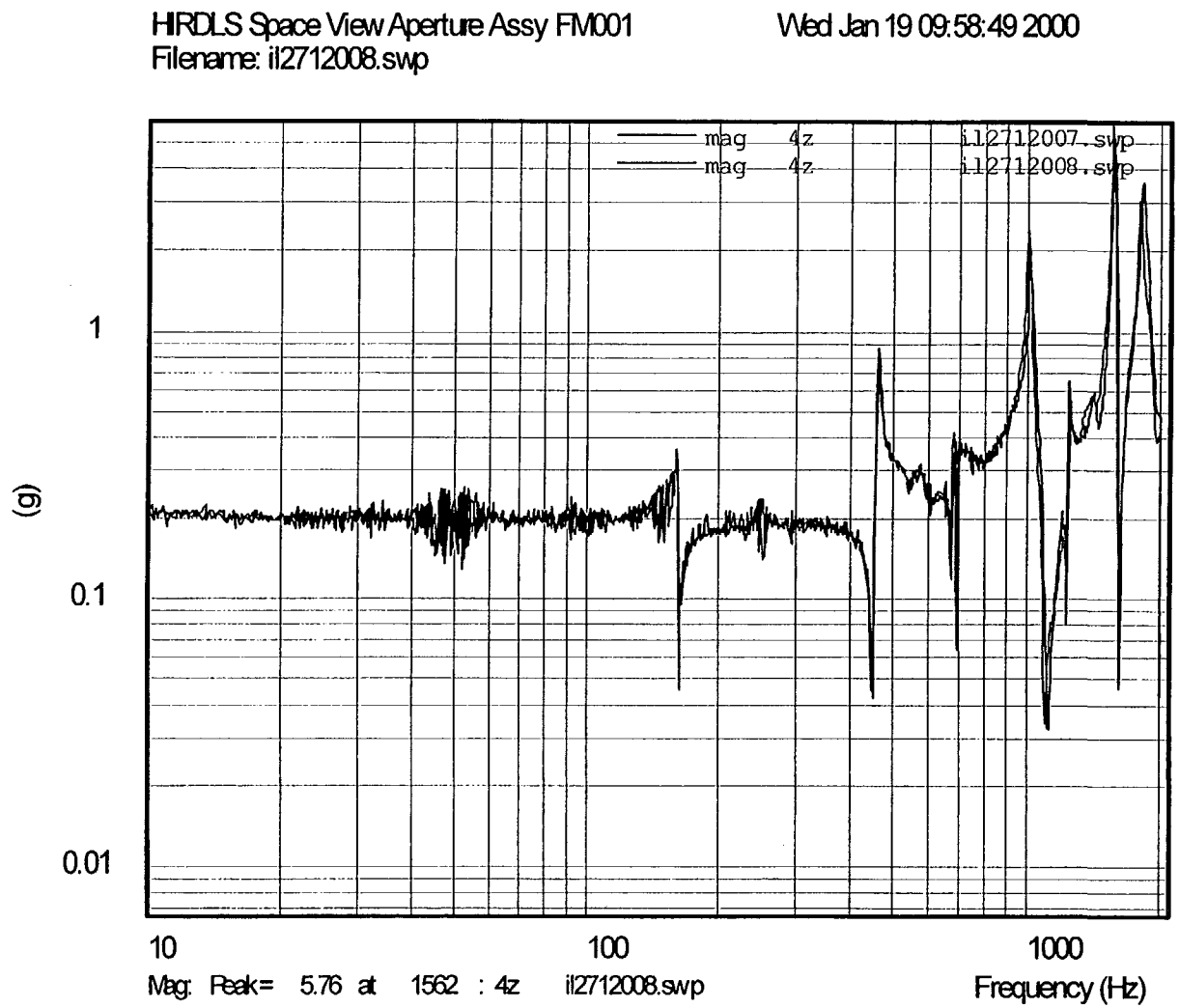

Figure 13 Pre and Post Workmanship Test low level sine responses – Position 4z in-axis

MATRA MARCONI SPACE

ENVIRONMENTAL ENGINEERING & TEST LABORATORY
Anchorage Road, Portsmouth, Hants PO3 5PU
Tel 01705 704510 Fax 01705 708278

NAMAS
TESTING
No. 0093

TEST CERTIFICATE

ISSUED UNDER UKAS REGISTRATION No. 0093 Serial No. IL2712-1

Customer	Matra Marconi Space (UK) Ltd HIRDLS F.A.O. N. Crossland (Ext 5409)
Customer Order No.	N/A
Title	Acceptance Vibration of Space View Aperture Assembly.
Description/Identification (Drawing Number, Issue, etc.)	Drawing Number: HR2L040, Issue 05.
Serial Number	FM001.
Date of Receipt	18th January 1999.
Specification/Procedure	3164-SA028-TPF, Issue 3. (Section 4.5)
Deviations/Concessions	O.R:- HR.NCR.00001.MMS.
Results obtained	All testing carried out in accordance with test procedure. All results held in EVT logbook IL2712.

The tests detailed above are certified to have been carried out to the requirements of the contract/order unless otherwise stated above. This certificate is issued in accordance with the quality control arrangements granted by our **UKAS TESTING** accreditation.

AUTHOR: G. M. STANCOMBE

DATE: 24/1/00

MMS 120 UK

APPROVED BY: S W. FORSTER

(Signature and print name)
FOR AND ON BEHALF OF THE
ENVIRONMENTAL TEST LABORATORY MANAGER.

Page 1 of 1

Registered office: The Grove, Warren Lane, Stanmore, Middlesex., HA7 4LY . No 2519610

Figure 14 Environmental Test Certificate

DISTRIBUTION LIST

INTERNAL	EXTERNAL
N Crossland	N Morris (RAL)
I Stewart	

CHANGE RECORD

CHANGE NUMBER	CLASS	CHANGE DETAILS	ISSUE
3164- 00362	-	First Issue	1

SECTION 3

Test Certificates

MATRA MARCONI SPACE

ENVIRONMENTAL ENGINEERING & TEST LABORATORY
Anchorage Road, Portsmouth, Hants PO3 5PU
Tel 01705 704510 Fax 01705 708278

NAMAS
TESTING
No. 0093

TEST CERTIFICATE

ISSUED UNDER **UKAS** REGISTRATION No: 0093 Serial No: IL2712-1

To:	Matra Marconi Space (UK) Ltd HIRDLS F.A.O. N. Crossland (Ext 5409)	**Customer Order No:**	N/A
Title:	Acceptance Vibration of Space View Aperture Assembly.		
Description/Identification of Test Item(s):	Drawing Number: HR2L040, Issue 05.		
Serial Number(s):	FM001.		
Date of Receipt:	18th January 1999.		
Specification/Method/ Procedure (& Issue):	3164-SA028-TPF, Issue 3. (Section 4.5)		
Deviations from above:	O.R:- HR.NCR.00001.MMS.		
Results/Observations:	All testing carried out in accordance with test procedure. All results held in EVT logbook IL2712.		

The tests detailed above are certified to have been carried out to the requirements of the contract/order unless otherwise stated above. This certificate is issued in accordance with the quality control arrangements granted by our **UKAS TESTING** accreditation.

AUTHOR: ..... G. M. STANCOMBE

MMS 120 UK

DATE: 24/1/00

APPROVED BY: S W Forster S W. FORSTER
(Signature and print name)
FOR AND ON BEHALF OF THE
ENVIRONMENTAL TEST LABORATORY MANAGER.

Registered office: The Grove, Warren Lane, Stanmore, Middlesex., HA7 4LY . No 2519610

MATRA MARCONI SPACE

ENVIRONMENTAL ENGINEERING & TEST LABORATORY
Anchorage Road, Portsmouth, Hants PO3 5PU
Tel 01705 704510 Fax 01705 708278

NAMAS
TESTING
No. 0093

TEST CERTIFICATE

ISSUED UNDER UKAS TESTING No: 0093 **Serial No:** IL2713-1

To:	F.A.O. Mr. IAN STEWART. Extn. 4950	**Customer Order No:**	N/A
Title:	Acceptance Thermal Vacuum Testing.		
Description/Identification of Test Item(s):	Space View Aperture Assy.		
Serial Number(s):	FM001		
Date of Receipt:	18th January 2000.		
Specification/Method/ Procedure (& Issue):	3164-SA028-TPF issue 3.(TP-MMS-451).		
Deviations from above:	I.A.W. O.R. HR-NCR-00003-MMS.		
Results/Observations:	Testing carried out in accordance with above procedure. Formal inspection , examination and testing of the unit was the responsibility of the customer.		

The tests detailed above are certified to have been carried out to the requirements of the contract/order unless otherwise stated above. This certificate is issued in accordance with the quality control arrangements granted by our **UKAS TESTING** accreditation.

AUTHOR...RE PAGE..... MMS 036 UK ..... **APPROVED BY**.....
(Signature and print name)
FOR AND ON BEHALF OF THE ENVIRONMENTAL TEST LABORATORY MANAGER.

DATE: .08/02/00.....

Registered office: The Grove, Warren Lane, Stanmore, Middlesex, HA7 4LY . No 2519610

Asternetics & Associates Inc.
1609 Border Avenue • Torrance, CA 90501
310/533-7057 • fax 310/533-7143
sales@asternetics.com

11 Feb 1999

Shipper Number
UK7855

Customer Order
4059651

Serial Number
4189-0021

Customer

COUNCIL FOR THE CENTRAL LABORATORY SERC
OF THE RESEARCH COUNCILS
RUTHERFORD APPLETON LABORATORY
BLDR R56, CHILTON, DIDCOT
OXON OX11 0QX UNITED KINGDOM

Certificate of Conformance: AAI hereby certifies that unless otherwise noted, the items listed below conform to the requirements of your purchase order or contract and the specifications referenced therein.

PartNumber	*Quantity*	*Description*	*PONumber*	*IncomingCert*
AD590LF/883B	40	INTEGRATED CIRCUIT AltPN:5962-8757103XA Mfr:ANALOG DEVICES D/C:9827	TMP089	67230484

AD 590 DATA SHEETS

Applicable to AD590's used on SSH/SVA Mechanisms

CERTIFIED TRUE AND CORRECT
Asternetics & Associates Inc.

By M. Phillips
M. Phillips

ANALOG DEVICES

Two-Terminal IC Temperature Transducer

AD590

FEATURES

Linear Current Output: 1 μA/K
Wide Range: -55°C to +150°C
Probe Compatible Ceramic Sensor Package
Two Terminal Device: Voltage In/Current Out
Laser Trimmed to ±0.5°C Calibration Accuracy (AD590M)
Excellent Linearity: ±0.3°C Over Full Range (AD590M)
Wide Power Supply Range: +4 V to +30 V
Sensor Isolation from Case
Low Cost

PIN DESIGNATIONS

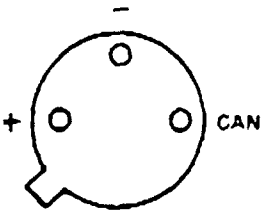

BOTTOM VIEW

PRODUCT DESCRIPTION

The AD590 is a two-terminal integrated circuit temperature transducer that produces an output current proportional to absolute temperature. For supply voltages between +4 V and +30 V the device acts as a high impedance, constant current regulator passing 1 μA/K. Laser trimming of the chip's thin-film resistors is used to calibrate the device to 298.2 μA output at 298.2K (+25°C).

The AD590 should be used in any temperature sensing application below +150°C in which conventional electrical temperature sensors are currently employed. The inherent low cost of a monolithic integrated circuit combined with the elimination of support circuitry makes the AD590 an attractive alternative for many temperature measurement situations. Linearization circuitry, precision voltage amplifiers, resistance measuring circuitry and cold junction compensation are not needed in applying the AD590.

In addition to temperature measurement, applications include temperature compensation or correction of discrete components, biasing proportional to absolute temperature, flow rate measurement, level detection of fluids and anemometry. The AD590 is available in chip form making, it suitable for hybrid circuits and fast temperature measurements in protected environments.

The AD590 is particularly useful in remote sensing applications. The device is insensitive to voltage drops over long lines due to its high impedance current output. Any well insulated twisted pair is sufficient for operation hundreds of feet from the receiving circuitry. The output characteristics also make the AD590 easy to multiplex: the current can be switched by a CMOS multiplexer or the supply voltage can be switched by a logic gate output.

PRODUCT HIGHLIGHTS

1. The AD590 is a calibrated two terminal temperature sensor requiring only a dc voltage supply (+4 V to +30 V). Costly transmitters, filters, lead wire compensation and linearization circuits are all unnecessary in applying the device.
2. State-of-the-art laser trimming at the wafer level in conjunction with extensive final testing ensures that AD590 units are easily interchangeable.
3. Superior interface rejection results from the output being a current rather than a voltage. In addition, power requirements are low (1.5 mWs @ 5 V @ +25°C.) These features make the AD590 easy to apply as a remote sensor.
4. The high output impedance (>10 MΩ) provides excellent rejection of supply voltage drift and ripple. For instance, changing the power supply from 5 V to 10 V results in only a 1 μA maximum current change, or 1°C equivalent error.
5. The AD590 is electrically durable: it will withstand a forward voltage up to 44 V and a reverse voltage of 20 V. Hence, supply irregularities or pin reversal will not damage the device.

REV. B

Information furnished by Analog Devices is believed to be accurate and reliable. However, no responsibility is assumed by Analog Devices for its use, nor for any infringements of patents or other rights of third parties which may result from its use. No license is granted by implication or otherwise under any patent or patent rights of Analog Devices.

One Technology Way, P.O. Box 9106, Norwood, MA 02062-9106, U.S.A.
Tel: 617/329-4700 World Wide Web Site: http://www.analog.com
Fax: 617/326-8703
© Analog Devices, Inc., 1997

AD590–SPECIFICATIONS (@ +25°C and V_S = +5 V unless otherwise noted)

Model	AD590J Min	AD590J Typ	AD590J Max	AD590K Min	AD590K Typ	AD590K Max	Units
ABSOLUTE MAXIMUM RATINGS							
Forward Voltage (E+ or E–)			+44			+44	Volts
Reverse Voltage (E+ to E–)			–20			–20	Volts
Breakdown Voltage (Case E+ or E–)			±200			±200	Volts
Rated Performance Temperature Range[1]	–55		+150	–55		+150	°C
Storage Temperature Range[1]	–65		+155	–65		+155	°C
Lead Temperature (Soldering, 10 sec)			+300			+300	°C
POWER SUPPLY							
Operating Voltage Range	+4		+30	+4		+30	Volts
OUTPUT							
Nominal Current Output @ +25°C (298.2K)		298.2			298.2		μA
Nominal Temperature Coefficient		1			1		μA/K
Calibration Error @ +25°C			**±5.0**			**±2.5**	°C
Absolute Error (Over Rated Performance Temperature Range)							
Without External Calibration Adjustment			**±10**			**±5.5**	°C
With +25°C Calibration Error Set to Zero			**±3.0**			**±2.0**	°C
Nonlinearity			**±1.5**			**±0.8**	°C
Repeatability[2]			±0.1			±0.1	°C
Long-Term Drift[3]			±0.1			±0.1	°C
Current Noise		40			40		pA/√Hz
Power Supply Rejection							
+4 V ≤ V_S ≤ +5 V		0.5			0.5		μA/V
+5 V ≤ V_S ≤ +15 V		0.2			0.2		μV/V
+15 V ≤ V_S ≤ +30 V		0.1			0.1		μA/V
Case Isolation to Either Lead		10^{10}			10^{10}		Ω
Effective Shunt Capacitance		100			100		pF
Electrical Turn-On Time		20			20		μs
Reverse Bias Leakage Current[4] (Reverse Voltage = 10 V)		10			10		pA
PACKAGE OPTIONS							
TO-52 (H-03A)		AD590JH			AD590KH		
Flatpack (F-2A)		AD590JF			AD590KF		

NOTES

[1]The AD590 has been used at –100°C and +200°C for short periods of measurement with no physical damage to the device. However, the absolute errors specified apply to only the rated performance temperature range.

[2]Maximum deviation between +25°C readings after temperature cycling between –55°C and +150°C; guaranteed not tested.

[3]Conditions: constant +5 V, constant +125°C; guaranteed, not tested.

[4]Leakage current doubles every 10°C.

Specifications subject to change without notice.

Specifications shown in **boldface** are tested on all production units at final electrical test. Results from those tests are used to calculate outgoing quality levels. All min and max specifications are guaranteed, although only those shown in **boldface** are tested on all production units.

Model	AD590L Min	AD590L Typ	AD590L Max	AD590M Min	AD590M Typ	AD590M Max	Units
ABSOLUTE MAXIMUM RATINGS							
Forward Voltage (E+ or E-)			+44			+44	Volts
Reverse Voltage (E+ to E-)			-20			-20	Volts
Breakdown Voltage (Case to E+ or E-)			±200			±200	Volts
Rated Performance Temperature Range[1]	-55		+150	-55		+150	°C
Storage Temperature Range[1]	-65		+155	-65		+155	°C
Lead Temperature (Soldering, 10 sec)			+300			+300	°C
POWER SUPPLY							
Operating Voltage Range	+4		+30	+4		+30	Volts
OUTPUT							
Nominal Current Output @ +25°C (298.2K)		298.2			298.2		µA
Nominal Temperature Coefficient		1			1		µA/K
Calibration Error @ +25°C			±1.0			±0.5	°C
Absolute Error (Over Rated Performance Temperature Range)							
Without External Calibration Adjustment			±3.0			±1.7	°C
With ±25°C Calibration Error Set to Zero			±1.6			±1.0	°C
Nonlinearity			±0.4			±0.3	°C
Repeatability[2]			±0.1			±0.1	°C
Long-Term Drift[3]			±0.1			±0.1	°C
Current Noise		40			40		pA/√Hz
Power Supply Rejection							
+4 V ≤ V_S ≤ +5 V		0.5			0.5		µA/V
+5 V ≤ V_S ≤ +15 V		0.2			0.2		µA/V
+15 V ≤ V_S ≤ +30 V		0.1			0.1		µA/V
Case Isolation to Either Lead		10^{10}			10^{10}		Ω
Effective Shunt Capacitance		100			100		pF
Electrical Turn-On Time		20			20		µs
Reverse Bias Leakage Current[4] (Reverse Voltage = 10 V)		10			10		pA
PACKAGE OPTIONS							
TO-52 (H-03A)		AD590LH			AD590MH		
Flatpack (F-2A)		AD590LF			AD590MF		

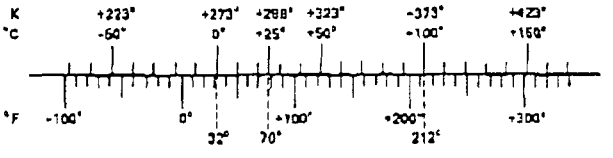

TEMPERATURE SCALE CONVERSION EQUATIONS

$$°C = \frac{5}{9}(°F - 32) \quad K = °C + 273.15$$

$$°F = \frac{9}{5}°C + 32 \quad °R = °F + 459.7$$

SECTION 4

Build Event Log

SECTION 4

Initial Motor Assembly HR2L004

L O T T R A C I N G R E P O R T

Record Selection: Works Order BR10865 / 000 Issues - W/O: 001 Part: 001 BOM: 001 Route:

Part Code HR2L004 MOTOR ASSEMBLY Date 7/ 9/98

R E Q U I R E D M A T E R I A L S

Part Code	Description	Qty Required	Issue	Qty Issued	Lot Ref	Remarks
GM1S422	MOTOR HOUSING	2.0000	002	2.0000	MS25421	
GM1S252	END BEARING CAP	2.0000	001	1.0000	GZ368472	
				1.0000	MS25414	
GM1S253	MOTOR SHAFT	2.0000	002	1.0000	GZ368707	
				1.0000	MS25415	
GM1S254	BEARING RETAINER	2.0000	001	2.0000	MS25416	
GM1S255	SPACER	2.0000	001	2.0000	MS25417	
GM1S256	BEARING RETAINER	2.0000	001	2.0000	MS25418	
GM1S257	MOTOR HOUSING	2.0000	002	2.0000	MS25419	
GM 8	SPECIAL WASHER	2.0000	001	2.0000	MS25420	
GM1[illegible]51	SHIM PACK .002" MOTOR ASSEMBLY	2.0000	001	2.0000	MS25716	
[illegible]	FRAMELESS D.C. MOTOR I.C.D.	4.0000	001	1.0000	MS26824	
HR2L005	DUST CAP (MOTOR)	2.0000	001	2.0000	MS25688	
F841736-001	SCR-SKT-STD-SS-MJ	6.0000		6.0000	MS23468	
F841737-001	SCR-SKT-STD-SS-MJ	6.0000		6.0000	GZ18127	
F838932-001	NUT-PLN-HEX-SS-MJ4	2.0000		2.0000	GZ363778	
ML50028	BEARING MINIATURE PRECISION	4.0000		4.0000	MS25402	
MD50046	PRELOAD SPRING	0.0200		2.0000	MS25447	
SC0028	VERSAMID 140	0.2000		MB 42814		
SA0021	EPIKOTE 828	0.0200		MS 26526		
SF0101	FILLER DT075 TO AFS 750	0.0200		92085392		
~~SC0206~~ SC0206	~~COATING FLUORAD FC722 (12LB)~~	~~0.0200~~				
~~SC0207~~ SC0207	~~COATING FLUORAD FC726 (14LB)~~	~~0.0200~~		MS04741		
HR2L004-001	MOTOR ASSEMBLY		001			
DS700	STD MANUFACTURING REQUIREMENTS					
ES601	IDENT MARKING.FLIGHT					
PS2039	FLIGHT & MGSE FASTENER					
PS2058	PRECISION CLEANING					
43	FASTENER LOCKING GUIDELINES					
[illegible]MB-GM-0030	BURN IN TEST					
[illegible]MB-GM-0025	OFFLOAD MOTOR ASSY PROCEDURE					
PS2071	FLUORAD FC-723 APPLN					

MMS 244 UK

QT-0787-A HR2L003 S/N° 98617874 98617875 98619873 98619876 MS26824

MANUFACTURING CARD

Final Inspection (MMS 244 UK)			Part Number: HR2L004
Proj./Model: H.I.R.D.L.S. ~~EM~~ FM.			
Title: MOTOR ASSY			
Project No:	17093 722001		Order No: BR11003
Quantity:	1	Insp cat.	Batch No:
Order Issue date:	22/01/99		Serial No:
Requirement date:	23/01/99		D.I.S.:
Material:		Auth. stamp	Tool Numbers:

Packaging: PS2058 PACKAGING METHOD 'B'

BUILD STANDARD HISTORY

Iss.	Mod. No.	Date	Brief Description	PC Stamp	PE Stamp
-001	HRAB 0001	22/01/99			

oduction Engineer	M.C Iss	Quality	Production Planner	Page Number
R Griffin	1		L Maber	1 of 10

Part No. HR2L004	Project/Model : H.I.R.D.L.S. ~~EM~~ FM Title : MOTOR ASSY

Order No: BR11003	Serial No:	D.I.S.:

NC / QCH REPORTS

No.	Date Raised	OpNo	Brief Description	Decision	Closed
QCHR HR10710	9.10.98	TEST	HIGH RESISTANCE	REWORK	MMS 244 UK
				I.A.W. MRB PPF·MMB·HIR·NC-0001	

PRODUCTION ENGINEERING DEVIATION NOTES

Dev No.	Date	OpNo	Brief Description	Author	PE Stamp

Part No. HR2L004	Project/Model : H.I.R.D.L.S. ~~EM~~ FM Title : MOTOR ASSY

Order No: BR11003	Serial No:	D.I.S.:

RESTRICTIONS HISTORY

AT RISK LABELS

No.	Date Raised	Reason	Date Cleared	QC Stamp

APPLICABLE DEVIATIONS/WAIVERS

RFD/RFW No	Date Rsd	At Risk Label	Remarks	Date Clrd	QC Stamp

Part No. HR2L004	Project/Model : H.I.R.D.L.S. EM Fm Title : MOTOR ASSY

OpNo	Operation Summary	Work/ Ctr	Signature/Stamp	
			Mfg.	Quality
0005	T & C	BQ1		
0010	ASSEMBLE	BA1		
0011	INSPECT			
0020	TEST			
0030	CLEAN/PROTECT			
0031	INSPECTION.			
0041	INSPECT			
0051	F/I			

Part No. HR2L004	Project/Model : H.I.R.D.L.S. ~~EM~~ FM Title : MOTOR ASSY

OpNo	Operation Description	WkCtr	Stamp
	SPACECRAFT COMPONENT FINISH AND CLEANLINESS IMPORTANT KEEP FREE OF GREASE AND FINGER STAINS HANDLE WITH CLEAN GLOVES AT ALL TIMES DRG REQD:- HR2L004 PS2039 PS2058 PS2143 ASSEMBLY TO BE PERFORMED IN A CONTROLLED AREA TO CLASS 10,000 WITH HUMIDITY LESS THAN 50%.		
0005	INSPECT. INSPECTION TO CHECK AND RECORD TRACEABILITY AND CONFIGURATION OF ALL PARTS AND MATERIALS.		MMS 244 UK 20.5.99

Part No. HR2L004	Project/Model : H.I.R.D.L.S. EM FM Title : MOTOR ASSY

OpNo	Operation Description	WkCtr	Stamp
0006	PRE-CLEAN. PRIOR TO ASSEMBLY ALL PARTS TO BE CLEANED I.A.W. DRG.REQ'S WEIGH AND RECORD. BAG AND LABEL I.A.W. ES601 METHOD 27. **FOR INSPECTION RECORDS SEE CLEANING LOG SHEET WITHIN THIS A.I.S.**		
0008	STRIP DOWN REMOVE BOTH MOTOR ASSEMBLIES FROM HOUSING REMOVE SHAFT FROM BOTH ARMATURES QCHR - HR10710 MRB - PPF.MMB.HR.NC.0001		M.T. 14
0010	ASSEMBLE PROCEED TO ASSEMBLE MOTOR ASSY TO DRG REQUIREMENTS & PO-PR-MMB-GM-0025 REF. TO NOTE 1 MACHINE LENGTH OF SPACER ITEM 005 TO ACHIEVE DIMENSION 3.05/2.79. (RE-CLEAN SPACER AFTER M/C) SELECT SHIM THICKNESS (ITEM 009) TO COMPRESS ITEM 019 TO 0.4/0.6 LENGTH WHEN ASSEMBLED. REF. TO NOTE 5 AND TORQUE TIGHTEN ITEMS 013, 015 AND SCREWS SUPPLIED TO THE REQUIREMENTS OF PS2039 APPENDIX A USING THE VALUES AS LISTED. **VERIFY TORQUE** TORQUED TO 0.4 N/M. 15 FEB 1999		M.T. 14

Part No. HR2L004	Project/Model : H.I.R.D.L.S. EM Title : MOTOR ASSY

OpNo	Operation Description	WkCtr	Stamp
0010 cont	LOCK ALL FASTENERS USING ITEMS 025, 026 & 027 I.A.W. PS2143 METHODS AA & AE. **VERIFY MIX** LOCK ITEM 003 AND ITEMS 010 USING ITEMS 025, 026 & 027 I.A.W. PS2024 MIX 36 PRIOR TO FINAL ASSY. EP.ROTE 828 VERSAMID 140 DTO75 **VERIFY MIX** MS 26526 MB 42814 C20 85392 EXP 30.7.99 19.4.99 DRESS SUPPLIED BOLTS BACK AFTER ASSY - SEE NOTE ON DRG. 15 FEB 1999		M.T. 14
0011	INSPECT.		MMS 244 UK
0020	TEST. TEST ASSEMBLY IN ACCORDANCE WITH PO-DIS-MMB-GM-0030 BURN IN TEST. Test Completed RTS Coupe	12-5-99	

Part No. HR2L004	Project/Model : H.I.R.D.L.S. EM Title : MOTOR ASSY

OpNo	Operation Description	WkCtr	Stamp
0030	CLEAN/PROTECT. ALL PARTS TO BE CLEANED I.A.W. PS2058 GRADE 2X. WEIGH AND RECORD. 199.32 gms BAG AND LABEL I.A.W. ES601 METHOD 27.		MMS 244 UK
0031	INSPECT.		MMS 244 UK
0041	INSPECTION. REF DIS0038 CARRY OUT MAGNETIC MOMENT MEASUREMENT. Not Required RJS Coupe		

Part No. HR2L004	Project/Model : H.I.R.D.L.S. EM Title : MOTOR ASSY

OpNo	Operation Description	WkCtr	Stamp
0051	FINAL INSPECT		MMS 244 UK

Part No. HR2L004	Project/Model : H.I.R.D.L.S. EM Title : MOTOR ASSY

ISSUE CHANGE LOG

M.C. ISS.	CHANGE SANCTION	DESCRIPTION OF CHANGE	DATE	ENGINEER /PLANNER	QUALITY STAMP
1	HRAB 0001	INITIAL ISSUE	22/01/99	L MABER	

MOTOR Nº 1
QT Ø787A
98G 17875
98G 19874

MATRA MARCONI SPACE

REDLINED FOR HIRDLS SVA 9/10/98 JKW

Design Instruction Sheet

Project : **GOMOS**	Number : PO-DIS-MMB-GM-0030 Issue : 1 Sheet 1 of 9 Sht(s)

Title : **MOTOR ASSEMBLY GM1S250 BURN IN TEST**	
Equipment affected : Serial Number : Location :	QUALIFICATION & FLIGHT BUILDS BR07836
BOM affected :	NONE
Inspection Requirements : On completion return to :	PLACE A SIGNED COPY OF THIS DIS IN THE LOG BOOK

The object of the task described in this Design Instruction Sheet is to burn in the offload motor assemblies demonstrating acceptable winding characteristics and bedding in motor brushes. Both the prime and redundant motors of the assembly will be tested.

ALL MOTOR ASSEMBLIES (GM1S250) TO BE ASSEMBLED INTO THE SFA (QM & FM) MUST UNDERGO THIS BURN- IN PROCEDURE.

	Originator	Design	Production	P.A.
Signed :	M H Haywood	[signature]	David Ford	[signature]
Name :	M H Haywood	P A Blythe	D W Ford	R V Jamieson
Date :	6-12-95	6.12.95	7.12.95	8.12.95
Action completed signature :				

Distribution :

P R Bevan
P A Blythe
D W Ford
R V Jamieson
DIS File

CONFIGURATION DATA CONTROL
MATRA MARCONI SPACE
(BRISTOL)
DATE 11.12.95
CHRONO. No. 2308

Design Instruction Sheet (Cont'd)

Project : **GOMOS**	Number :PO-DIS-MMB-GM-0030 Issue : 1 Sheet 2 of 9 Sht(s)

1 Pre-test

1. Mount the motor assembly in a clamp securely such that the shaft is free to rotate and the cables for the motor windings are easily accessible. ✓

2. Measure the winding resistance of the prime and redundant motor windings at each of four shaft positions as outlined in Table 1. The winding resistance should be approximately ~~8.5Ω~~ 22.7Ω ± 12.5% ie 19.9Ω → 25.5Ω ✓

3. Measure the isolation between the shaft of the motor assembly and the prime and redundant windings of the motor. The resistance should be greater than 100MΩ. Record the results in Table 2. ✓ >40MΩ

4. Measure the torque required to rotate the shaft of the motor assembly and record the results in Table 3. ✓

5. Set up the motor assembly and auxiliary equipment as shown in Figure 1. ✓

J.K. Wathino
9/10/98

Design Instruction Sheet (Cont'd)

Project : **GOMOS**	Number :PO-DIS-MMB-GM-0030 Issue : 1 Sheet 3 of 9 Sht(s)

2 Motor Test

1. Apply the ~~9V~~ 14.5V supply to the prime motor winding. The current drawn by the motor should not exceed ~~0.6A~~ 0.4A (dropping to approximately ~~0.45A~~ 0.30A as the motor warms up during operation).

   Inform design if motor current exceeds the maximum permissible.

2. Measure the speed of rotation of the shaft. The speed of rotation should be approximately 1000rpm. Record the results in Table 6.

3. Every 2 minutes remove the power to the motor then measure the increase in resistance in the prime and redundant windings. Rebuild the set up of Figure 1 and reapply power to the primary motor. Record the results in Table 4. The motor is to run for 15 minutes in total.

   (If the winding resistance increases by more than 40% of its starting value the test is to be aborted and design department informed.)

4. Upon completion of the 15 minute cycle remove the power and reverse the polarity of the power supply so that the motor will turn in the opposite direction.

5. Repeat steps 1 to 4 filling in Tables 4 and 6 as before.

6. Reconfigure the equipment arrangement shown in Figure 1 such that the redundant motor is powered and the prime motor is short circuited.

7. Apply the ~~9V~~ 14.5V supply to the redundant motor winding. The current drawn by the motor should not exceed ~~0.6A~~ 0.4A (dropping to approximately ~~0.45A~~ 0.30A as the motor warms up during operation).

8. Measure the speed of rotation of the shaft. The speed of rotation should be approximately 1000rpm. Record the results in Table 6.

J.K. Watkins 9/10/98

Design Instruction Sheet (Cont'd)

Project : **GOMOS**	Number :PO-DIS-MMB-GM-0030 Issue : 1 Sheet 4 of 9 Sht(s)

9. Every 2 minutes remove the power to the motor then measure the increase in resistance in the prime and redundant windings. Record the results in Table 5. Rebuild the set up and reapply power to the redundant motor. The motor is to run for 15 minutes in total. ✓

   (If the winding resistance increases by more than 40% of its starting value the test is to be aborted and inform the design department.) ✓

10. Upon completion of the 15 minute cycle remove the power and reverse the polarity of the power supply so that the motor will turn in the opposite direction. ✓

11. Repeat steps 7 to 10 filling in Tables 5 and 6 as before. ✓

12. Allow the motor to cool down. ✓

J.K. Wathins
9/10/98

Design Instruction Sheet (Cont'd)

Project : **GOMOS**	Number :PO-DIS-MMB-GM-0030 Issue : 1 Sheet 5 of 9 Sht(s)

3 Post-test

1. Measure the winding resistance of the prime and redundant motor windings at each of four shaft positions as outlined in Table 7. ✓

   The results should reflect initial measurements taken during the Pretest. ✓

2. Measure the isolation between the shaft of the motor and the prime and redundant windings of the motor. The resistance should be greater than 100MΩ. Record the results in Table 8. ✓ > 40MΩ

3. Measure the torque required to rotate the shaft of the motor and record the results in Table 9.

4. Strip the motor down, sufficiently to perform items 5 and 6 for prime and redundant motors.

5. Inspect the brushes looking for any signs of uneven or excessive wear or damage.

   Design to be present during this operation.

6. Vacuum out any dust debris from the motor housings and rotors.

6a. Measure and record brush depth

7. Rebuild the motor to GM1S250.

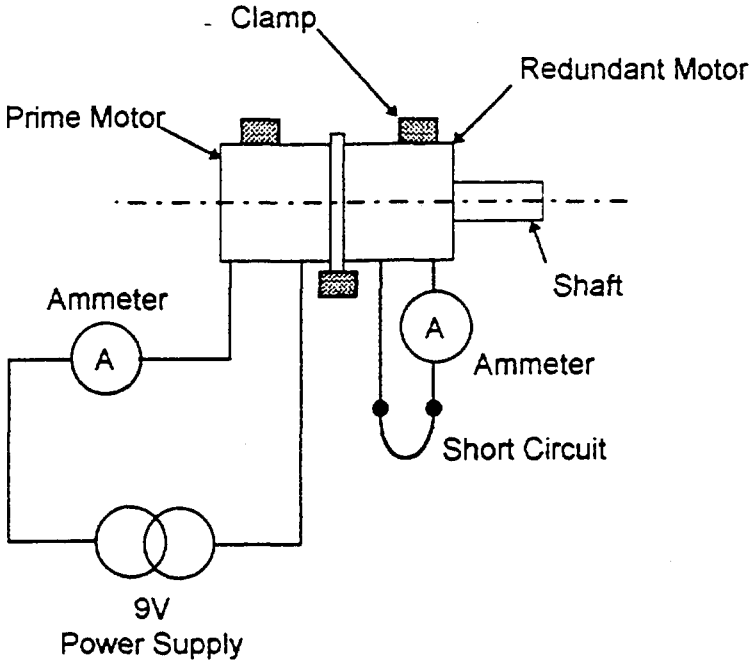
Clamp
Redundant Motor
Prime Motor
Shaft
Ammeter
A
A
Ammeter
Short Circuit
9V
Power Supply

FIGURE 1

MATRA MARCONI SPACE

Design Instruction Sheet (Cont'd)

Project : **GOMOS**	Number :PO-DIS-MMB-GM-0030 Issue : 1 Sheet 7 of 9 Sht(s)

PRE-TEST RESULTS

NO DATUM
≈ 90° SPACING

WINDING RESISTANCE		
Position	Prime Winding Resistance	Redundant Winding Resistance
0°	22.6 * Ω	22.9 * Ω
90°	22.6 * Ω	22.8 * Ω
180°	22.6 * Ω	22.8 * Ω
270°	22.6 * Ω	23.0 * Ω

TABLE 1

ISOLATION	
Prime Winding to Motor Shaft	> 40 MΩ
Redundant Winding to Motor Shaft	>40 MΩ

TABLE 2

TORQUE	
Motor Shaft Clockwise Rotation	5 mNm
Motor Shaft Anticlockwise Rotation	5 mNm

TABLE 3

J.K. Watkins
9/10/98

MATRA MARCONI SPACE

Design Instruction Sheet (Cont'd)

Project : **GOMOS**	Number :PO-DIS-MMB-GM-0030 Issue : 1 Sheet 8 of 9 Sht(s)

TEST RESULTS

WINDING RESISTANCE					
	Primary Windings		Redundant Windings		
Time (mins)	Clock-wise	Anticlock-wise	Clock-wise	Anticlock-wise	Current (PRIME)
2	23.7Ω	26.7 Ω	24.8 Ω	28.0 Ω	0.33 A
4	24.5 Ω	26.0 Ω	24.3 Ω	25.6 Ω	0.33 A
6	24.9 Ω	26.1 Ω	24.9 Ω	26.4 Ω	0.33 A
8	25.1 Ω	26.1 Ω	26.9 Ω	23.9 Ω	0.33 A
10	25.7 Ω	26.3 Ω	25.2 Ω	26.2 Ω	0.33 A
12	25.8 Ω	26.4 Ω	25.3 Ω	26.0 Ω	0.33 A
14	25.5 Ω	26.2 Ω	25.5 Ω	26.6 Ω	0.33 A
15	25.9 Ω	26.4 Ω	25.7 Ω	25.7 Ω	0.33 A

Rotation caused by **PRIMARY** motor powered @ ~~9V~~ 14.5V

TABLE 4

WINDING RESISTANCE					
	Primary Windings			Redundant Windings	
Time (mins)	Clock-wise	Anticlock-wise	Current (RED'T)	Clock-wise	Anticlock-wise
2	27.0 Ω	25.8 Ω	0.33 A	26.5 Ω	27.0 Ω
4	25.3 Ω	26.0 Ω	0.33 A	26.4 Ω	26.6 Ω
6	25.6 Ω	25.8 Ω	0.33 A	26.5 Ω	27.0 Ω
8	25.7 Ω	23.7 Ω	0.33 A	26.7 Ω	26.6 Ω
10	25.9 Ω	25.8 Ω	0.33 A	26.8 Ω	26.9 Ω
12	26.0 Ω	25.8 Ω	0.33 A	25.5 Ω	27.1 Ω
14	25.9 Ω	26.1 Ω	0.33 A	26.9 Ω	26.7 Ω
15	25.7 Ω	26.1 Ω	0.33 A	26.6 Ω	26.8 Ω

Rotation caused by **REDUNDANT** motor powered @ ~~9V~~ 14.5V

TABLE 5

MOTOR SPEED		
	Clockwise	Anticlockwise
Primary Powered	1200 rpm	1242 rpm
Redundant Powered	1200 rpm	1200 rpm

TABLE 6

J.K. Watkins
9/10/98

NO PATTERN
≈ 90° SPACING

POST-TEST RESULTS

WINDING RESISTANCE		
Position	Prime Winding Resistance	Redundant Winding Resistance
0°	24.1 * Ω	24.5 * Ω
90°	24.3 * Ω	23.9 * Ω
180°	24.1 * Ω	22.3 * Ω
270°	24.0 * Ω	24.0 * Ω

TABLE 7

ISOLATION	
Prime Winding to Motor Shaft	>40 MΩ
Redundant Winding to Motor Shaft	>40 MΩ

TABLE 8

TORQUE	
Motor Shaft Clockwise Rotation	mNm
Motor Shaft Anticlockwise Rotation	mNm

TABLE 9

MOTOR N°2
QT Ø787A
98G 19876
98G 19873

MATRA MARCONI SPACE

REDLINED FOR HINDLS SVA 9/10/95

Design Instruction Sheet

Project : **GOMOS**	Number : PO-DIS-MMB-GM-0030 Issue : 1 Sheet 1 of 9 Sht(s)

Title : **MOTOR ASSEMBLY GM1S250 BURN IN TEST**	
Equipment affected : Serial Number : Location :	QUALIFICATION & FLIGHT BUILDS BR07836
BOM affected :	NONE
Inspection Requirements : On completion return to :	PLACE A SIGNED COPY OF THIS DIS IN THE LOG BOOK

The object of the task described in this Design Instruction Sheet is to burn in the offload motor assemblies demonstrating acceptable winding characteristics and bedding in motor brushes. Both the prime and redundant motors of the assembly will be tested.

ALL MOTOR ASSEMBLIES (GM1S250) TO BE ASSEMBLED INTO THE SFA (QM & FM) MUST UNDERGO THIS BURN- IN PROCEDURE.

	Originator	Design	Production	P.A.
Signed :	M H Haywood	[signature]	David Ford	[signature]
Name :	M H Haywood	P A Blythe	D W Ford	R V Jamieson
Date :	6-12-95	6.12.95	7.12.95	8.12.95
Action completed signature :				

Distribution :

P R Bevan
P A Blythe
D W Ford
R V Jamieson
DIS File

CONFIGURATION DATA CONTROL
MATRA MARCONI SPACE
(BRISTOL)
DATE 11.12.95
CHRONO. No. 2308

Design Instruction Sheet (Cont'd)

Project : **GOMOS**	Number :PO-DIS-MMB-GM-0030 Issue : 1 Sheet 2 of 9 Sht(s)

1 Pre-test

1. Mount the motor assembly in a clamp securely such that the shaft is free to rotate and the cables for the motor windings are easily accessible. ✓

2. Measure the winding resistance of the prime and redundant motor windings at each of four shaft positions as outlined in Table 1. The winding resistance should be approximately ~~8.5Ω~~ 22.7Ω ± 12.5% (19.9Ω → 25.5Ω) ✓

3. Measure the isolation between the shaft of the motor assembly and the prime and redundant windings of the motor. The resistance should be greater than 100MΩ. Record the results in Table 2. ✓

4. Measure the torque required to rotate the shaft of the motor assembly and record the results in Table 3. ✓

5. Set up the motor assembly and auxiliary equipment as shown in Figure 1. ✓

J.K. Watkins
9/10/98

2 Motor Test

1. Apply the ~~9V~~ 14.5V supply to the prime motor winding. The current drawn by the motor should not exceed ~~0.6A~~ 0.4A (dropping to approximately ~~0.45A~~ 0.3A as the motor warms up during operation).

   Inform design if motor current exceeds the maximum permissible. ✓

2. Measure the speed of rotation of the shaft. The speed of rotation should be approximately 1000rpm. Record the results in Table 6. ✓

3. Every 2 minutes remove the power to the motor then measure the increase in resistance in the prime and redundant windings. Rebuild the set up of Figure 1 and reapply power to the primary motor. Record the results in Table 4. The motor is to run for 15 minutes in total. ✓

   (If the winding resistance increases by more than 40% of its starting value the test is to be aborted and design department informed.) ✓

4. Upon completion of the 15 minute cycle remove the power and reverse the polarity of the power supply so that the motor will turn in the opposite direction. ✓

5. Repeat steps 1 to 4 filling in Tables 4 and 6 as before. ✓

6. Reconfigure the equipment arrangement shown in Figure 1 such that the redundant motor is powered and the prime motor is short circuited. ✓

7. Apply the ~~9V~~ 14.5V supply to the redundant motor winding. The current drawn by the motor should not exceed ~~0.6A~~ 0.4A (dropping to approximately ~~0.45A~~ 0.3A as the motor warms up during operation). ✓

8. Measure the speed of rotation of the shaft. The speed of rotation should be approximately 1000rpm. Record the results in Table 6. ✓

J.K. Watkins
9/10/98

Design Instruction Sheet (Cont'd)

Project : **GOMOS**	Number :PO-DIS-MMB-GM-0030 Issue : 1 Sheet 4 of 9 Sht(s)

9. Every 2 minutes remove the power to the motor then measure the increase in resistance in the prime and redundant windings. Record the results in Table 5. Rebuild the set up and reapply power to the redundant motor. The motor is to run for 15 minutes in total. (If the winding resistance increases by more than 40% of its starting value the test is to be aborted and inform the design department.)	✓
10. Upon completion of the 15 minute cycle remove the power and reverse the polarity of the power supply so that the motor will turn in the opposite direction.	✓
11. Repeat steps 7 to 10 filling in Tables 5 and 6 as before.	✓
12. Allow the motor to cool down.	✓

J.K Watkins
9/10/98

Design Instruction Sheet (Cont'd)

Project : **GOMOS**	Number :PO-DIS-MMB-GM-0030 Issue : 1 Sheet 5 of 9 Sht(s)

3 Post-test

1. Measure the winding resistance of the prime and redundant motor windings at each of four shaft positions as outlined in Table 7.

   The results should reflect initial measurements taken during the Pretest.

2. Measure the isolation between the shaft of the motor and the prime and redundant windings of the motor. The resistance should be greater than 100MΩ. Record the results in Table 8.

3. Measure the torque required to rotate the shaft of the motor and record the results in Table 9.

4. Strip the motor down, sufficiently to perform items 5 and 6 for prime and redundant motors.

5. Inspect the brushes looking for any signs of uneven or excessive wear or damage.

   Design to be present during this operation.

6. Vacuum out any dust debris from the motor housings and rotors.

6a Measure and record brush depth.

7. Rebuild the motor to GM1S250.

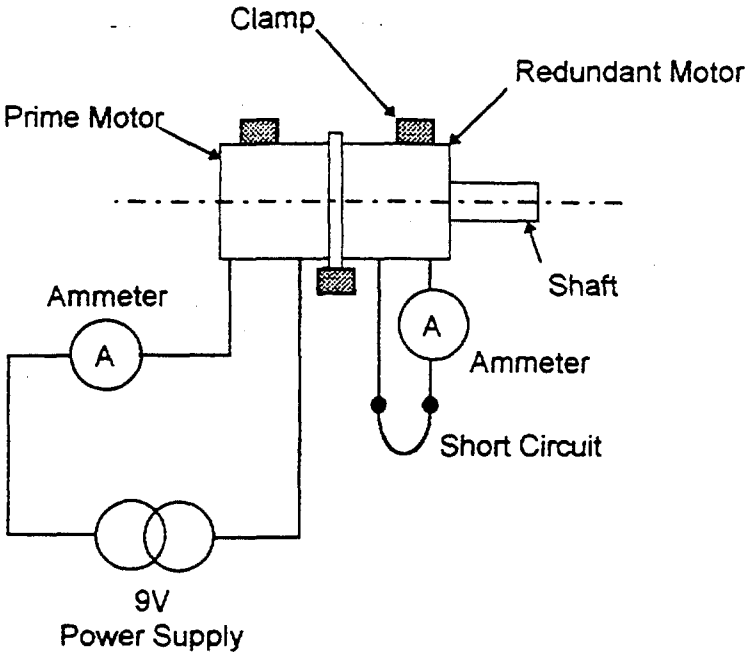
Clamp
Redundant Motor
Prime Motor
Shaft
Ammeter
A
A
Ammeter
Short Circuit
9V
Power Supply

FIGURE 1

MATRA MARCONI SPACE

Design Instruction Sheet (Cont'd)

Project : **GOMOS**	Number :PO-DIS-MMB-GM-0030 Issue : 1 Sheet 7 of 9 Sht(s)

* NO DATUM
≈ 90° SPACING

PRE-TEST RESULTS

WINDING RESISTANCE		
Position	Prime Winding Resistance	Redundant Winding Resistance
0°	25.7 * Ω	22.7 * Ω
90°	23.0 * Ω	22.9 * Ω
180°	24.3 * Ω	22.8 * Ω
270°	24.6 * Ω	24.1 * Ω

TABLE 1

ISOLATION	
Prime Winding to Motor Shaft	>40 MΩ
Redundant Winding to Motor Shaft	>40 MΩ

TABLE 2

TORQUE	
Motor Shaft Clockwise Rotation	5 mNm
Motor Shaft Anticlockwise Rotation	5 mNm

TABLE 3

J.K. Nathan
9/10/98

MATRA MARCONI SPACE

Design Instruction Sheet (Cont'd)

Project : **GOMOS**	Number :PO-DIS-MMB-GM-0030 Issue : 1 Sheet 8 of 9 Sht(s)

* ERRONEOUS READING

TEST RESULTS

ON A COUPLE OF OCCASSIONS THE MOTOR FAILED TO START AND TOOK NO CURRENT. LAST INSTANCE WAS AFTER 6 MINUTES

WINDING RESISTANCE					
	Primary Windings		Redundant Windings		
Time (mins)	Clock-wise	Anticlock-wise	Clock-wise	Anticlock-wise	Current (PRIME)
~~4~~ 2 *	33.6 Ω	25.2 Ω	23.2 Ω	24.9 Ω	0.35 A
~~8~~ 4	23.7 Ω	23.3 Ω	23.7 Ω	25.4 Ω	0.35 A
~~12~~ 6	23.7 Ω	27.9 Ω	24.6 Ω	25.5 Ω	0.35 A
~~16~~ 8	25.0 Ω	23.6 Ω	24.1 Ω	25.0 Ω	0.35 A
~~20~~ 10	26.7 Ω	23.9 Ω	24.7 Ω	26.4 Ω	0.35 A
~~24~~ 12	25.3 Ω	25.9 Ω	24.7 Ω	25.6 Ω	0.35 A
~~28~~ 14	26.9 Ω	27.7 Ω	25.0 Ω	24.4 Ω	0.35 A
~~32~~ 15	25.2 Ω	27.5 Ω	24.7 Ω	26.2 Ω	0.35 A

Rotation caused by **PRIMARY** motor powered ~~@ 9V~~ 14.5V

TABLE 4

WINDING RESISTANCE					
	Primary Windings			Redundant Windings	
Time (mins)	Clock-wise	Anticlock-wise	Current (REDT)	Clock-wise	Anticlock-wise
2	26.8 Ω	23.5 Ω	0.35 A	25.7 Ω	25.9 Ω
4	27.3 Ω	28.2 Ω	0.35 A	26.0 Ω	26.5 Ω
6	27.5 Ω	27.2 Ω	0.35 A	26.9 Ω	26.6 Ω
8	25.3 Ω	25.5 Ω	0.35 A	26.3 Ω	26.2 Ω
10	27.1 Ω	23.8 Ω	0.35 A	26.3 Ω	26.1 Ω
12	23.8 Ω	28.1 Ω	0.35 A	26.1 Ω	26.4 Ω
14	28.1 Ω	28.0 Ω	0.35 A	26.6 Ω	26.9 Ω
15	27.2 Ω	25.4 Ω	0.35 A	26.1 Ω	26.5 Ω

Rotation caused by **REDUNDANT** motor powered @ ~~9V~~ 14.5V

TABLE 5

INITIALLY MEASURED 28kΩ MOVED SHAFT TO GET 28Ω

MOTOR SPEED		
	Clockwise	Anticlockwise
Primary Powered	1170 rpm	1200 rpm
Redundant Powered	1224 rpm	1236 rpm

TABLE 6

J.K. Nothing 9/10/98

POST-TEST RESULTS

* NO DATUM
∝ 90° SPACING

WINDING RESISTANCE		
Position	Prime Winding Resistance	Redundant Winding Resistance
0°	24.5 * Ω	24.9 * Ω
90°	24.4 * Ω	24.5 * Ω
180°	24.9 * Ω	24.3 * Ω
270°	24.1 * Ω	24.3 * Ω

TABLE 7

ISOLATION	
Prime Winding to Motor Shaft	> 40 MΩ
Redundant Winding to Motor Shaft	> 40 MΩ

TABLE 8

TORQUE	
Motor Shaft Clockwise Rotation	mNm
Motor Shaft Anticlockwise Rotation	mNm

TABLE 9

NOTE : CAN ROTATE SHAFT TO OBTAIN HIGH RESISTANCE ON THE PRIME WDG.

BRITISH AEROSPACE SPACE SYSTEMS LIMITED

EARTH OBSERVATION & SCIENCE DIVISION

QUALITY CONTROL HISTORY RECORD

SHEET / 1 OF 5 | SERIAL NO. HR 10710

TO BE RAISED INITIALLY				CONFIGURATION AT FINAL INSPECTION	
PROJECT: HIRDLS	DRAWING NO. HR2L004	UNIT SERIAL NO. BR10865	DRG. ISSUE 001	QUERY NOs. / MODS	
ROUND/MODEL/ASSY:DESIGNATION: EM/FM	DESCRIPTION: MOTOR ASSY				
	CUSTOMER				

ITEM NO.	PROD. STAGE NO.	ORIGINATED BY (STAMP)	DATE	DISCREPANCY	DISPOSITION	ENGINEERING AUTHORITY	ACCEPT INSP.
1			9/10/98	MOTOR Nº 2, PRIME WINDING, THE OUTPUT SHAFT CAN BE POSITIONED TO GIVE A HIGH RESISTANCE MEASURE OF THE ORDER OF KILOHMS. DURING BURN IN TESTS IT WAS NOTED THAT THE MOTOR FAILED TO ROTATE WHEN 14.5V WAS APPLIED. (SEVERAL OCCASIONS) (PO-DIS-MMB-GM-030)	REMOVE END CAP, INSPECT PRIME BRUSH AND COMMUTATOR ASSEMBLY. INSPECTED, NO OBVIOUS PROBLEM, VACUUM OUT DEBRIS AND CLEAN COMMUTATOR. REASSEMBLE WITHOUT LOCKING. RETURN TO TEST TO BURN IN FOR AN ADDITIONAL HOUR AND RECHECK IF HIGH RESISTANCE MEASUREMENT PRESENT. ALSO MEASURE THE BRUSH DEPTH AND RECORD VALUES FOR POSSIBLE LATER ASSESSMENT AFTER LIFE TEST. REPLACE CAPSCREWS ON COMPLETION OF TEST. BRUSH DEPTH: FROM RED MARK ON BRUSH ASSY (1) [illegible]·81 (2) 1·81 (3) 1·81 (4) 1·80		

QUALITY CONTROL HISTORY RECORD *(CONTINUATION SHEET)*

SHEET 2 OF 5 | SERIAL NO. HR 10710

ITEM NO.	PROD. STAGE NO.	ORIGINATED BY (STAMP)	DATE	DISCREPANCY	DISPOSITION	ENGINEERING AUTHORITY	ACCEPT INSP.
1				(continued)	Ran motor for an additional hour and fault persists. Characteristics test :- Power Prime Motor with short on redundant. Reduce voltage from 14.5 volts to 7 volts when motor stalls. Increasing volts does not cause motor to rotate because windings open circuit. Move output shaft and motor rotates. Does not happen when procedure repeated on redundant winding with prime shorted. Repeated procedure on N°1 motor, OK and much smoother down to 4 volts before it stalls.	J.K. Watkins 16/10/98	
					MRB Recommend on 16/10/98. Continuation of investigation as described below.		

QUALITY CONTROL HISTORY RECORD *(CONTINUATION SHEET)*

SHEET 3 OF 5 | SERIAL NO. HR 10710

ITEM NO.	PROD. STAGE NO.	ORIGINATED BY (STAMP)	DATE	DISCREPANCY	DISPOSITION	ENGINEERING AUTHORITY	ACCEPT INSP.
					1) Drive the motor assembly with the redundant motor, and monitor the output voltage of the prime motor in order to establish if there are any anomalies.		
					2) Disassemble the motor assembly. Inspect the brushes and commutator of the prime motor. Then perform an electrical measurement on the commutator segments looking for open circuits.	T Dumphy	
					3) Reconvene the MRB.	P S Page	
						J.K. Watkins 10/10/98	
					PLOTS 1 TO 3 ATTACHED INDICATE MOTOR ASSY Nº 2 PRIME MOTOR IS FAULTY. PLOTS 4 AND 5 DEMONSTRATE M.T.A ASSY Nº 1 IS OK.		

QUALITY CONTROL HISTORY RECORD *(CONTINUATION SHEET)*

SHEET 4 OF 5 | SERIAL NO. HR 10710

ITEM NO.	PROD. STAGE NO.	ORIGINATED BY (STAMP)	DATE	DISCREPANCY	DISPOSITION	ENGINEERING AUTHORITY	ACCEPT INSP.
					MOTOR ASSEMBLY STRIPPED.		
					RESISTANCE MEASUREMENTS ON		
					PRIME AND REDUNDANT COMMUTATONS		
					GIVES ≈7.9Ω ACROSS ALL DIAGONALLY		
					OPPOSITE COMMUTATONS. BLACK		
					WITNESS MARKS ~~are~~ EVIDENT ON		
					THE PRIME COMMUTATON BUT		
					NOT ON THE REDUNDANT		
					WINDING. RESISTANCE		
					MEASUREMENT ON THE DIRTY		
					COMMUTATOR PAIR DID SHOW		
					HIGH RESISTANCE WHEN POSITIONED		
					OVER THE DEPOSIT.		
					MRB DECISION		
					Return motor to Kollmorgen		
					for further investigation.		
					Assemble spare ~~new~~ motor to the		
					SVA Motor Assy.		
					Production Engineering to raise		
					necessary planning.		

QUALITY CONTROL HISTORY RECORD *(CONTINUATION SHEET)*

SHEET 5 OF 5 | SERIAL NO. **HR** 10710

ITEM NO.	PROD. STAGE NO.	ORIGINATED BY (STAMP)	DATE	DISCREPANCY	DISPOSITION	ENGINEERING AUTHORITY	ACCEPT INSP.
					After consultation with Kollmorgen further diagnostic checks were carried out on the rotor commutation bars. Contamination of 2 of the commutation bars with adhesive was found. This was removed and motor is now operating satisfactorily. Refer to MRB-PPF-MMB-HIR.NC.-0001 for full details. Return unit to production for assembly re-build to HR2L0004.	KTS Coupe 20-5-99	

MATRA MARCONI SPACE UK

OCCURRENCE REPORT

PROJECT: HIRDLS

CHARGE No.

REF No:

DATE: 04/11/98

SHEET 1 of 5

DESCRIPTION

FOUND DURING: TEST

E/C

MODEL

ORIGINATOR NCR No: PPF-MMB-HIR-NC-0001

DRG/SPEC No: HR2L004

ISSUE: 01

TITLE: SVA MOTOR ASSY

SOURCE CODE:

SUPPLIER

MANUFACTURER

BATCH No

SERIAL No

QTY RECEIVED

QTY ACCEPTED

SHORT DESCRIPTION OF OCCURRENCE: MOTOR FAILED TO ROTATE WHEN 14.5 V WAS APPLIED

NON-CONFORMANCE REPORT		REWORK REQUEST		ANOMALY INVESTIGATION		STAMP/SIGN AND DATE ALL ENTRIES
PROV	CONFIRM	PROV	CONFIRM	PROV	CONFIRM	

DETAILS OF OCCURRENCE

1. During the Burn-in Test of the Motor Assy the motor failed to rotate when a voltage of 14.5 V was applied.
   The problem was investigated as described in the attached QCHR sheets (HR 10710) 1 to 4.
2. The investigation established that there was a heavy deposit securely bonded to a number of commutator segments directly under the brush contact regions.
   The origin of this deposit is not known.
3. MRB DECISION

3.1. Return defective motor to the supplier (KOLLMORGEN) for further investigation, to establish :-
- The origin of the deposits on the commutator

HARDWARE RECOVERY	ACCEPT PAR DATE	DEFINED RE DATE	COMPLETE QC DATE

FINAL COUNT	ACCEPT	REJECT	SCRAP	CONCESS

LEVEL STATUS	REQUIREMENT MET	CLASS	MRB	ECR/EO	OFF LINE INVEST
N-1					
N					
N+1					
N+2					

MODELS AFFECTED STATUS	PROJECT TECHNICAL CLOSURE		
	MODEL	ENGINEERING	PA
	MM		
	EM		
	QM		
	FM		
	GS		
	SPARES		

DEFECT STATISTICS	A	B	C	D	E	F	G	H	J	K	L	M	N	P	Q	R	S	T	U	V	W	X	Y	Z

CLOSURE BY PA/QC

SIGN: T Dempsey

DATE: 13/5/99

SS0242

STAMP/SIGN AND DATE ALL ENTRIES

3.1 (Cont'd)

- The cause of the failure.

3.2. KOLLMORGEN to supply a replacement motor.

3.3. KOLLMORGEN to provide a report on the findings of their investigation

4. IDENTIFICATION OF DEFECTIVE MOTOR.

- MMB PART No. : HR2L003
- MMB TRACEABILITY NUMBER : MS26824
- MOTOR SERIAL No. : 98G 19873.
- KOLLMORGEN PART No. : QT-0787-B.
- MMB PURCHASE ORDER : 31850721
- KOLLMORGEN CofC : 164916
- SUPPLIER : KOLLMORGEN.

T Dumphry
5 NOV 98

R T Cooper
9 NOV 98

STAMP/SIGN AND DATE ALL ENTRIES

5. MRB reconvened on 19/4/99.
ATTENDEES : R. COUPE , T. DUNPHY.

5.1. Review of ACTIONS from MRB of 9/11/99.

5.1.1. None of the actions placed at the first MRB have been accomplished because HIRDLS Project Management determined that these actions should have a low priority in relation to all of the other HIRDLS activities that were taking place at the time.

5.1.2. There is now no point in sending the motor back to the supplier as the deposits on the commutator have been removed, without the authority of the MRB, so it would not be possible to perform any analysis on the deposits.

5.2. The Motor Assembly has since been re-assembled using Motor serial numbers 21506 and 19873 (this being the motor that was defective in the first instance).
Motor 21506 ran without problems, Motor 19873 showed the same symptoms as before.
When an axial load was applied to the output shaft of the Motor Assembly it was noted that the open circuit disappeared and a reading of ≃ 23Ω was obtained, this being nominal.

STAMP/SIGN AND DATE ALL ENTRIES

5.2. Cont'd. The load applied would have resulted in a movement of app 0.2 mm of the commutator in relation to the brush holder, which is fixed.

This indicates that the position of the brushes in relation to the commutator could be critical.

5.3 ACTIONS

5.3.1. Manufacture a washer of 0.2 mm thickness and fit it to the shaft adjacent to the shaft distance piece (item 5 of HR2L004).

Re-assemble the motor and test.

ACTION 1 R. COUPE

5.4. MRB to be reconvened upon completion of test.

T Dunphy 19/4/99.
R S Coupe

6. MRB Re-convened on 18/5/99.

ATTENDEES: T. DUNPHY, R. COUPE

6.1. Review of Action.

6.1.1. ACTION 1.

The washer was manufactured and installed. The motor ran better than before but was still not entirely satisfactory. ACTION 1 CLOSED

STAMP/SIGN AND DATE ALL ENTRIES

6.2. The motor was then disassembled for inspection. This inspection (under x10 magnification) revealed two small areas of a resin adhesive bonded to the commutator bars of the rotor. These deposits were carefully removed and the commutator reinspected. All was OK.

6.3. The motor was then cleaned, reassembled and re-tested.
The motor functioned correctly in all respects.

6.4. Upon completion of this test the motor was disassembled, inspected, cleaned and then re-assembled in accordance with the Drive Unit Assembly drawing (HR2L 004) and subsequently tested to the requirements of PO-DIS-MMB-GM-0030.
The Drive Unit Assembly functioned correctly in all respects.

6.5 It is not possible to determine at this time when the resin adhesive was deposited on the commutator. It could have been at the motor supplier, or it could have occured during assembly of the motor at MMSB.

6.6. The MRB concludes that the NCR shall be CLOSED on the basis of the above.

T Dumphy 13/5/99 TS Cowell 18-5-99

REFER TO FRONT SHEET FOR CLOSURE SIGNATURES

BRITISH AEROSPACE SPACE SYSTEMS LIMITED

EARTH OBSERVATION & SCIENCE DIVISION

QUALITY CONTROL HISTORY RECORD

SHEET / 1 OF

SERIAL NO. HR 10710

TO BE RAISED INITIALLY				CONFIGURATION AT FINAL INSPECTION		
PROJECT: HIRDLS	DRAWING NO. HR2L004		UNIT SERIAL NO. BR10865	DRG. ISSUE 001	QUERY NOs. / MODS	
ROUND/MODEL/ASSY:DESIGNATION: EM/FM	DESCRIPTION: MOTOR ASSY					
	CUSTOMER					

ITEM NO.	PROD. STAGE NO.	ORIGINATED BY (STAMP)	DATE	DISCREPANCY	DISPOSITION	ENGINEERING AUTHORITY	ACCEPT INSP.
1			9/10/98	MOTOR Nº 2, PRIME WINDING, THE OUTPUT SHAFT CAN BE POSITIONED TO GIVE A HIGH RESISTANCE MEASURE OF THE ORDER OF KILOHMS. DURING BURN IN TESTS IT HAS NOTED THAT THE MOTOR FAILED TO ROTATE WHEN 14.5V WAS APPLIED. (SEVERAL OCCASIONS) (PO-DIS-MMS-GM-034)	REMOVE END CAP, INSPECT PRIME BRUSH AND COMMUTATOR ASSEMBLY. INSPECTED, NO OBVIOUS PROBLEM, VACUUM OUT DEBRIS AND CLEAN COMMUTATOR. REASSEMBLE WITHOUT LOCKING. RETURN TO TEST TO BURN IN FOR AN ADDITIONAL HOUR AND RECHECK IF HIGH RESISTANCE MEASUREMENT PRESENT. ALSO MEASURE THE BRUSH DEPTH AND RECORD VALUES FOR POSSIBLE LATER ASSESSMENT AFTER LIFE TEST. REPLACE CAPSCREWS ON COMPLETION OF TEST. BRUSH DEPTH: FROM RED MARK ON BRUSH ASSY (1) 1.81 (2) 1.81 (3) 1.81 (4) 1.50		

QUALITY CONTROL HISTORY RECORD *(CONTINUATION SHEET)*

SHEET 2 OF

SERIAL NO. HR 10710

ITEM NO.	PROD. STAGE NO.	ORIGINATED BY (STAMP)	DATE	DISCREPANCY	DISPOSITION	ENGINEERING AUTHORITY	ACCEPT INSP.
1				(continued)	Ran motor for an additional hour and fault persists. Characteristic test :- Power Prime Motor with short on redundant. Reduce voltage from 14.5 volts to 7 volts when motor stalls. Increasing volts does not cause motor to rotate because windings open circuit. Move output shaft and motor rotates. Does not happen when procedure repeated on redundant winding with prime shorted. Repeated procedure on N°1 motor, OK and much smoother down to 4 volts before it stalls.	KTS Cooper J.K. Watkins 16/10/98	
					MRB Recommend on 16/10/98 Continuation of investigation as described below.		

QUALITY CONTROL HISTORY RECORD *(CONTINUATION SHEET)*

SHEET 3 OF

SERIAL NO. HR 10710

ITEM NO.	PROD. STAGE NO.	ORIGINATED BY (STAMP)	DATE	DISCREPANCY	DISPOSITION	ENGINEERING AUTHORITY	ACCEPT INSP.
					1) Drive the motor assembly with the redundant motor, and monitor the output voltage of the prime motor in order to establish if there are any anomalies.		
					2) Disassemble the motor assembly. Inspect the brushes and commutator of the prime motor. Then perform an electrical measurement on the commutator segments looking for open circuits.	T Dempsey	
					3) Recommend the MRB.	J.K. Wathins 16/10/98	
					PLOTS 1 TO 3 ATTACHED INDICATE MOTOR ASSY Nº 2 PRIME MOTOR IS FAULTY. PLOTS 4 AND 5 DEMONSTRATE M.T.A ASSY Nº 1 IS OK.		

SP 034 8/94

QUALITY CONTROL HISTORY RECORD *(CONTINUATION SHEET)*

SHEET 4 OF

SERIAL NO. HR 1071 O

ITEM NO.	PROD. STAGE NO.	ORIGINATED BY (STAMP)	DATE	DISCREPANCY	DISPOSITION	ENGINEERING AUTHORITY	ACCEPT INSP.
					MOTOR ASSEMBLY STRIPPED.		
					RESISTANCE MEASUREMENTS ON		
					PRIME AND REDUNDANT COMMUTATINS		
					GIVES ≈7.9Ω ACROSS ALL DIAGONALLY		
					OPPOSITE COMMUTATONS. BLACK		
					WITNESS MARKS ~~WE~~ EVIDENT ON		
					THE PRIME COMMUTATON BUT		
					NOT ON THE REDUNDANT		
					WINDING. RESISTANCE		
					MEASUREMENT ON THE DIRTY		
					COMMUTATOR PAIR DID SHOW		
					HIGH RESISTANCE WHEN POSITIONED		
					OVER THE DEPOSIT.		

LOT 1

MOTOR N° 2

VOLTAGE MONITORED ON PRIME MOTOR WITH 27Ω CONNECTED. ~~PRIME~~ RED DRIVEN BY 8.5V AND TAKING 0.2A. ESTIMATED SPEED 10RPS.

19-Oct-98
9:09:26

NO or SLOW TRIGGER

Choose Source

Exp A

Exp B

Fnc E

Fnc F

Chan 1

Chan 2

CD > 12

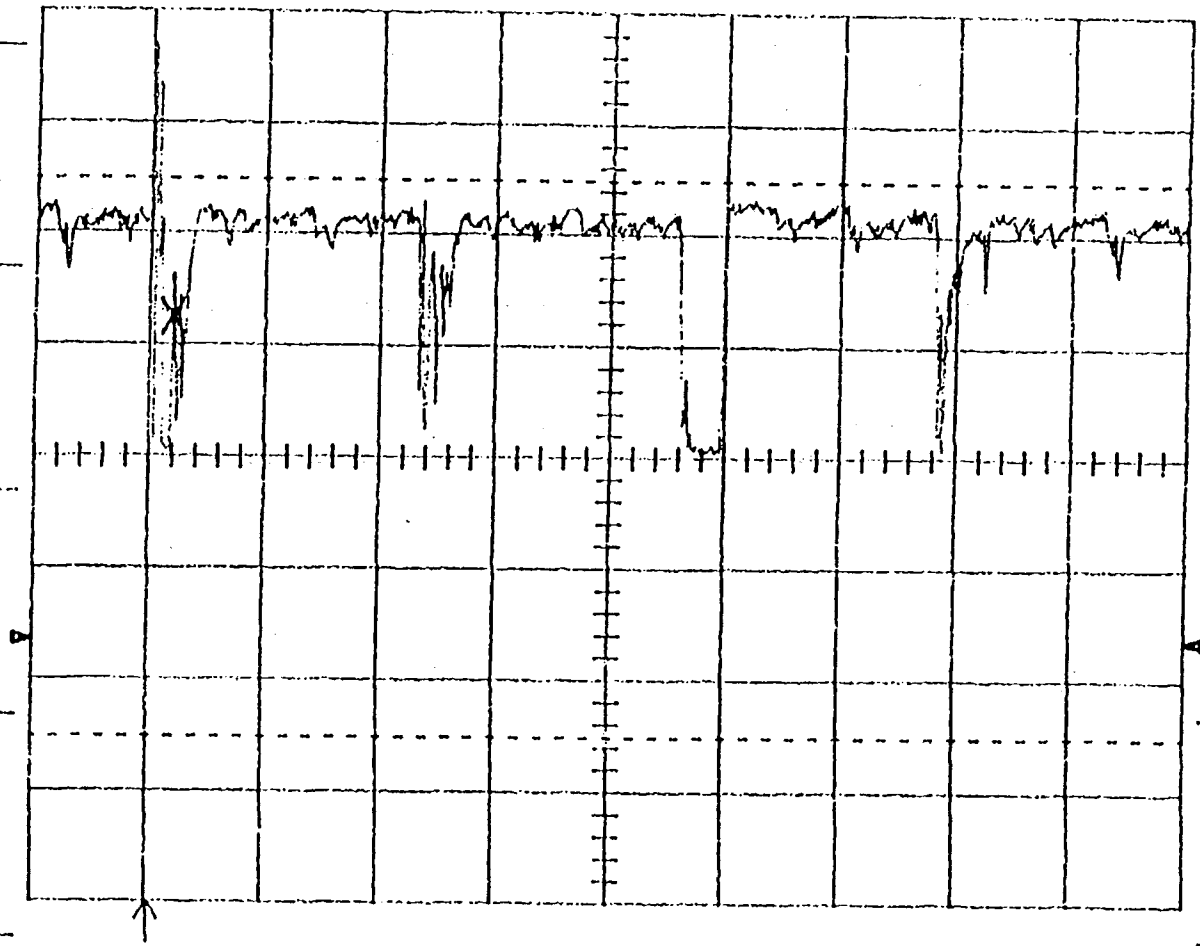

Chan 1
0 mV

Cancel

Δt 0.00 ms

1/Δt ∞

CH1 -1.68 V DC

CH1 .1 V ×10 =
CH2 .2 V ×10 =

T/div 10 ms

PLOT 2 MOTOR ASSY Nº 2 (2)

SAME AS PLOT 1 WITH EXPANDED.
LARGE DROPOUT ONCE PER REV.

19-Oct-98
9:14:47

NO or SLOW TRIGGER

Choose Source

Exp A

Exp B

Fnc E

Fnc F

Chan 1

Chan 2

CD > 12

Cancel

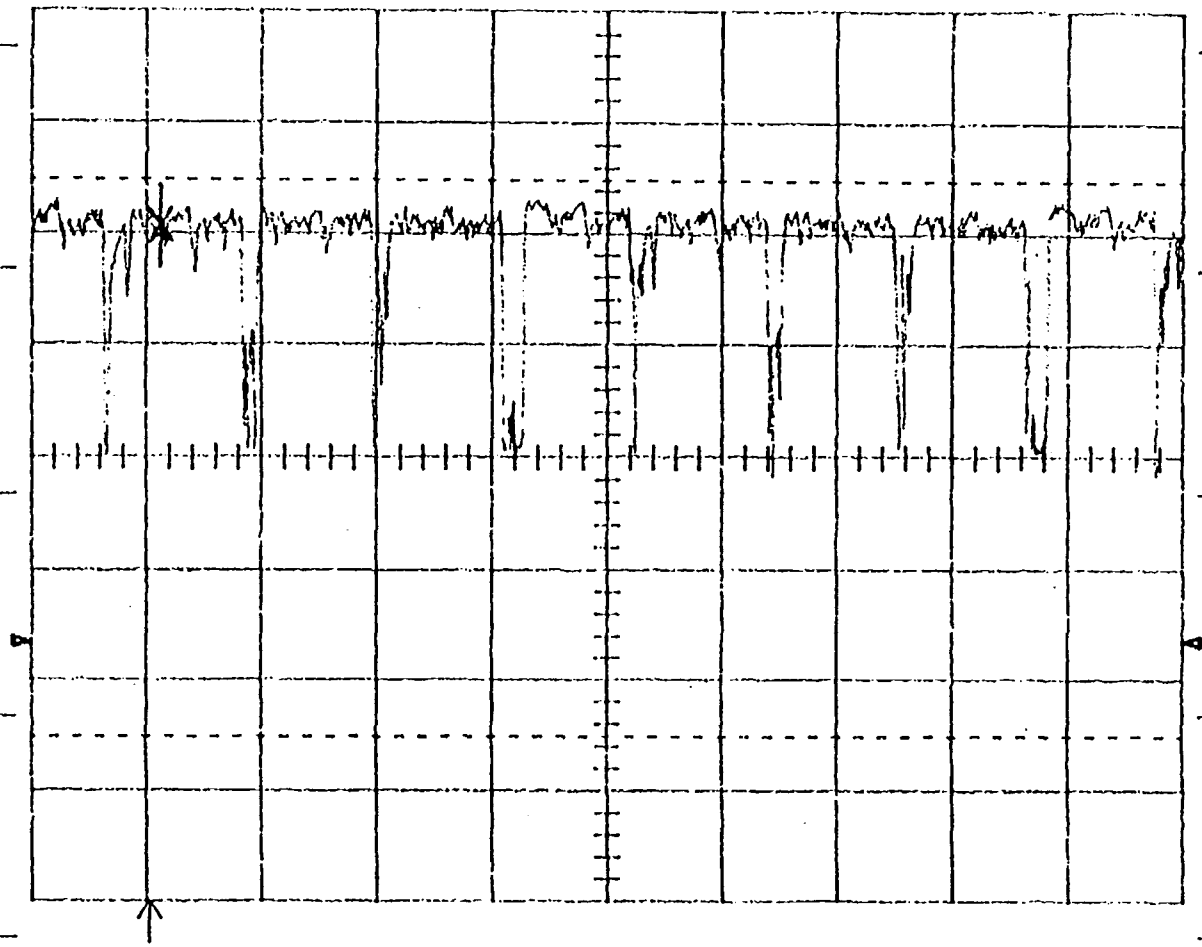

Chan 1
0 mV

Δt 0.0 ms

1/Δt ∞

CH1 -1.68 V DC

CH1 .1 V ×10 =
CH2 .2 V ×10 =

T/div 20 ms

PLOT 3

MOTOR ASSY N° 2

PRIME DRIVEN 8.5V, 0.2A WITH ESTIMATED SPEED 600rpm. MONITOR ACROSS RED^T WDG WITH 27Ω LOAD. NO DROP OUTS

NB SPEED VARIES BECAUSE DRIVE DROPS OUT.

19-Oct-98
9:23:56

NO or SLOW TRIGGER

Choose Source

Exp A

Exp B

Fnc E

Fnc F

Chan 1

Chan 2

CD > 12

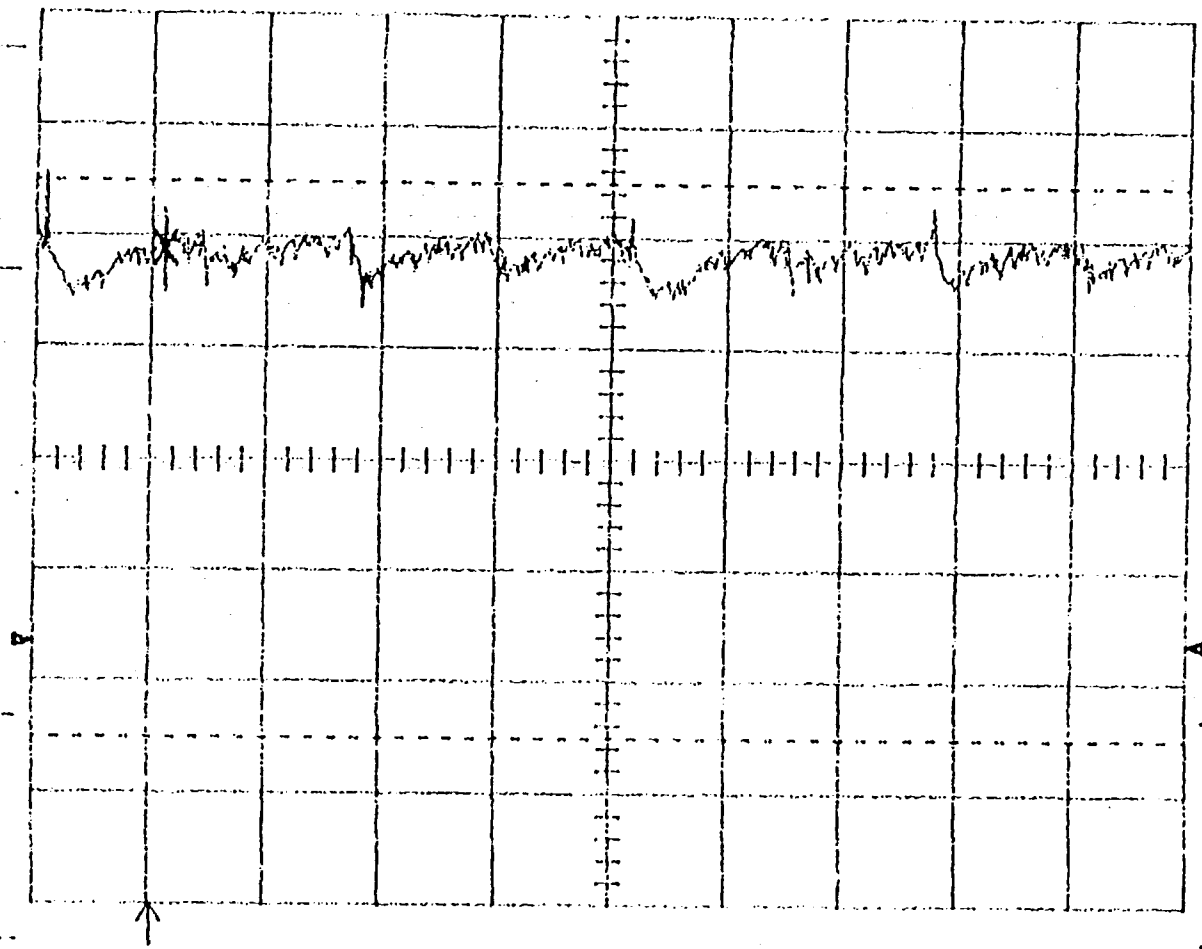

Chan 1
0 mV

Cancel

Δt 0.0 ms

1/Δt ∞

CH1 -1.68 V DC

CH1 .1 V ×10 =
CH2 .2 V ×10 =

T/div 20 ms

KOLLMORGEN

Inland Motor

501 FIRST ST • RADFORD, VA 24141
PHONE 540-639-9045
FAX: 540-731-4193

SHIP TO

KOLLMORGEN HIGHTECH LTD.
C/O JAS FORWARDING SE (US) INC
4020 TRADEPORT BLVD.

ATLANTA GA 30354

900229

SALES ORDER NO. 038755

PACKING LIST NO. 958138

X PARTIAL COMPLETE

CUSTOMER ORDER NO./CONTRACT NO.	VIA	DATE
IM-02705-0	UPS GROUND	07-26-99

QUANTITY	MODEL OR PART NO.	DESCRIPTION	UNIT PRICE
4	QT-0787-8 *HR0L003	SP-MMS-356	
	S/N 98G19873 THRU 98G19876		
	NLR - EAR99 - COUNTRY OF ORIGIN - USA		
	TORQUE MOTORS 8501.31.3000 (4)		
	REF: MATRA MARCONI SPACE # 31850721		
	KOLLMORGEN HIGHTECH LTD		
	SERVO HOUSE		
	14-16 MULFORDS HILL	MS 26824	
	TADLEY HAMPSHIRE		
	RG26 6HX ENGLAND		
1	NRE *NONE	INLAND	
	THESE COMMODITIES, TECHNOLOGY OR SOFTWARE WERE EXPORTED FROM THE UNITED STATES IN ACCORDANCE WITH THE EXPORT ADMINISTRATION REGULATION DIVERSION CONTRARY TO U.S. LAW PROHIBITED.		
	LOG # 98-30-209	11.08.98	

164916

RECEIVED BY _____ DATE _____

ALL APPLICABLE PROVISIONS OF THE FAIR LABOR STANDARDS ACT OF 1930, AS AMENDED, HAVE BEEN COMPLIED WITH.

STANDARD CERTIFICATION OF CONFORMANCE

THIS IS TO ATTEST THAT INLAND MOTOR (FSCM # 11384) MAINTAINS A QUALITY SYSTEM IN ADHERENCE WITH ANSI/ISO/ASQC Q-9001 REQUIREMENTS AND BY VIRTUE OF THESE CONTROLS WE DO HEREBY CERTIFY THAT THE ABOVE QUANTITY OF UNITS WERE MANUFACTURED IN ACCORDANCE WITH THE APPLICABLE SPECIFICATIONS/ REQUIREMENTS AS SET FORTH IN THE ABOVE REFERENCED PURCHASE ORDER. THE SELLER HAS AVAILABLE FOR EXAMINATION EVIDENCE OF MANUFACTURING, TEST, INSPECTION AND/OR CONTRACTUAL RECORDS.

CERTIFIED ON THE ABOVE DATE BY THE FOLLOWING COMPANY REPRESENTATIVE. 07-26-99

Howard J. Hart

HOWARD J. HART/QUALITY DIRECTOR

Title: Individual Acceptance Test Procedure for the QT-0787 Torque Motor

Written By: C. Wynn C.R. Wynn Date: 8/30/95:bw 5/13/98 Rev.: B

Approved By: D. Hale Date: 8/31/95 Sheet No. 5 of 5

TEST DATA SHEET - continued

9. Thermal Cycle:

First Cycle	Insulation Resistance		Continuity	
Ambient		megohms	✓	Check if OK
-40°C		megohms	✓	Check if OK
+70°C		megohms	✓	Check if OK

Six Cycles Completed (Check if done) ✓ (✓)

Last Cycle	Insulation Resistance		Continuity	
Ambient		megohms	✓	Check if OK
-40°C		megohms	✓	Check if OK
+70°C		megohms	✓	Check if OK

10. Post Thermal Cycle Tests:

(3.A) Insulation Resistance: 10 K megohms

(3.B) Dielectric Strength: Check if OK ✓ (✓)

(3.C) Insulation Resistance: 10 K megohms

(5.) Resistance: 10.1, 10.0, 10.2, 10.1, 10.15 volts
25.25, 25.0, 25.5, 25.25, 25.375 ohms
25.275 avg. ohms

(6.A) Peak Torque: oz·in 12.3 CW
oz·in 12.2 CCW

(6.B) Torque Sensitivity:

9.70 9.20
7.60 7.10
oz·in/amp 8.40 CW

9.65 9.15
7.50 7.0
oz·in/amp 8.325 CCW

(7.) Friction Torque: amp .039 CW
amp .039 CCW

11. Final Inspection: Check if done. ✓ (✓)
2.28 ounces

KOLLMORGEN CORPORATION INLAND MOTOR

TP-21267

Title: Individual Acceptance Test Procedure for the QT-0787 Torque Motor

Written By: C. Wynn C. Wynn Date: 8/30/95:bw 5/13/98 Rev.: B

Approved By: D. Hale Date: 8/31/95 Sheet No. 4 of 5

TEST DATA SHEET

Customer No. _____ Inland Model QT-0787-B Date 7-15-98

Serial No. 98G19873 Job No. 038755 Tester H.S.

1. Visual: Check if OK ✓ (✓)

2. Brush Force: 21, 22, 20, 19 grams

3.A Insulation Resistance: 10K megΩ

3.B Dielectric Strength: Check if OK ✓ (✓)

3.C Insulation Resistance: 10K megΩ

4. Rotation: Check if OK ✓ (✓)

5. Resistance: 9.30, 9.25, 9.28, 9.32, 9.34 volts
23.25, 23.125, 23.20, 23.30, 23.35 ohms
23.245 avg. ohms

6.A Peak Torque:
oz·in 12.4 CW
oz·in 12.3 CCW

6.B Torque Sensitivity:

9.75 9.25
7.75 7.25
oz·in/amp 8.50 CW

9.70 9.20
7.60 7.10
oz·in/amp 8.40 CCW

7. Friction Torque:
amp .040 CW
amp .040 CCW

8. Shorted Turns Test:
amp .044 CW
amp .044 CCW

volts 6.92 CW
volts 6.95 CCW

HIRDLS DRIVE MOTOR ASSY FM

18-5-99

HR2L 004 HISTORY RECORD

1/ Drive unit appears to be working well. ~~its~~ Smooth running and will always restart from stopped position.
Further test on output voltage shows a small voltage dropout in 2 places.

2. Inspection of commutator bars under x10 magnifica revealed 2 small areas of resin on the commutation bars of the rotor.
The resin was removed, the rotor cleaned, reassembled and tested.

3 Operation of motor was smooth running without any voltage dropout detected.

4 The drive unit assembly was reassembled BAW HR2L004 and tested in accordance with (PO-015-MMB-GH-0030)
Test results are satisfactory.

GB

MATRA MARCONI SPACE

Motor No 2
QT 0787A
98G 19876
98G 19873

REDUNDO FOR HINDLS SVA 9/12/95

Design Instruction Sheet

Project : GOMOS	Number : PO-DIS-MMB-GM-0030 Issue : 1 Sheet 1 of 9 Sht(s)

Title : MOTOR ASSEMBLY GM1S250 BURN IN TEST	
Equipment affected : Serial Number : Location :	QUALIFICATION & FLIGHT BUILDS BR07836
BOM affected :	NONE
Inspection Requirements : On completion return to :	PLACE A SIGNED COPY OF THIS DIS IN THE LOG BOOK

The object of the task described in this Design Instruction Sheet is to burn in the offload motor assemblies demonstrating acceptable winding characteristics and bedding in motor brushes. Both the prime and redundant motors of the assembly will be tested.

ALL MOTOR ASSEMBLIES (GM1S250) TO BE ASSEMBLED INTO THE SFA (QM & FM) MUST UNDERGO THIS BURN- IN PROCEDURE.

	Originator	Design	Production	P.A.
Signed :	M H Haywood	[signature]	David Ford	[signature]
Name :	M H Haywood	P A Blythe	D W Ford	R V Jamieson
Date :	6-12-95	6.12.95	7.12.95	8.12.95
Action completed signature :				

Distribution :

P R Bevan
P A Blythe
D W Ford
R V Jamieson
DIS File

CONFIGURATION DATA CONTROL
MATRA MARCONI SPACE
(BRISTOL)
DATE 11.12.95
CHRONO. No. 2308

MATRA MARCONI SPACE
P.O. Box 16 Filton, Bristol BS12 7YB

RETEST AFTER RETURN FROM MANUFACTURER
3/3/99

Design Instruction Sheet (Cont'd)

Project : **GOMOS**	Number :PO-DIS-MMB-GM-0030 Issue : 1 Sheet 2 of 9 Sht(s)

1 Pre-test

1. Mount the motor assembly in a clamp securely such that the shaft is free to rotate and the cables for the motor windings are easily accessible.	✓
2. Measure the winding resistance of the prime and redundant motor windings at each of four shaft positions as outlined in Table 1. The winding resistance should be approximately ~~8.5Ω~~ 22.7Ω ± 12.5% (19.9Ω → 25.5Ω)	PRIME = 22.6Ω RED = 27.2Ω *
3. Measure the isolation between the shaft of the motor assembly and the prime and redundant windings of the motor. The resistance should be greater than 100MΩ. Record the results in Table 2.	✓
4. Measure the torque required to rotate the shaft of the motor assembly and record the results in Table 3.	
5. Set up the motor assembly and auxiliary equipment as shown in Figure 1.	✓

* THE REDUNDANT MOTOR, ONE NEAREST SHAFT, NOW EXHIBITS THE PROBLEM THAT WAS FORMERLY ASSOCIATED WITH THE PRIME MOTOR. THERE ARE HIGH RESISTANCE POSITION → 4 → 5KΩ. WHEN VOLTAGE APPLIED TO REDUNDANT WINDING WITH PRIME SHORTED → REDUCED VOLTS TO 5VOLTS → STOPPED AND WOULD NOT GO ~~START~~ EVEN IF VOLTS INCREASED TO 15V. THIS DOES NOT HAPPEN WITH PRIME WHICH STARTS AND STOPS AT 3V.

2 Motor Test

1. Apply the ~~9V~~ 14.5V supply to the prime motor winding. The current drawn by the motor should not exceed ~~0.8A~~ 0.4A (dropping to approximately ~~0.45A~~ 0.3A as the motor warms up during operation).

   Inform design if motor current exceeds the maximum permissible.

2. Measure the speed of rotation of the shaft. The speed of rotation should be approximately 1000rpm. Record the results in Table 6.

3. Every 2 minutes remove the power to the motor then measure the increase in resistance in the prime and redundant windings. Rebuild the set up of Figure 1 and reapply power to the primary motor. Record the results in Table 4. The motor is to run for 15 minutes in total.

   (If the winding resistance increases by more than 40% of its starting value the test is to be aborted and design department informed.)

4. Upon completion of the 15 minute cycle remove the power and reverse the polarity of the power supply so that the motor will turn in the opposite direction.

5. Repeat steps 1 to 4 filling in Tables 4 and 6 as before.

6. Reconfigure the equipment arrangement shown in Figure 1 such that the redundant motor is powered and the prime motor is short circuited.

7. Apply the ~~9V~~ 14.5V supply to the redundant motor winding. The current drawn by the motor should not exceed ~~0.8A~~ 0.4A (dropping to approximately ~~0.45A~~ 0.3A as the motor warms up during operation).

8. Measure the speed of rotation of the shaft. The speed of rotation should be approximately 1000rpm. Record the results in Table 6.

9. Every 2 minutes remove the power to the motor then measure the increase in resistance in the prime and redundant windings. Record the results in Table 5. Rebuild the set up and reapply power to the redundant motor. The motor is to run for 15 minutes in total.

   (If the winding resistance increases by more than 40% of its starting value the test is to be aborted and inform the design department.)

10. Upon completion of the 15 minute cycle remove the power and reverse the polarity of the power supply so that the motor will turn in the opposite direction.

11. Repeat steps 7 to 10 filling in Tables 5 and 6 as before.

12. Allow the motor to cool down.

3 Post-test

1. Measure the winding resistance of the prime and redundant motor windings at each of four shaft positions as outlined in Table 7.

   The results should reflect initial measurements taken during the Pretest.

2. Measure the isolation between the shaft of the motor and the prime and redundant windings of the motor. The resistance should be greater than 100MΩ. Record the results in Table 8.

3. Measure the torque required to rotate the shaft of the motor and record the results in Table 9.

4. Strip the motor down, sufficiently to perform items 5 and 6 for prime and redundant motors.

5. Inspect the brushes looking for any signs of uneven or excessive wear or damage.

   Design to be present during this operation.

6. Vacuum out any dust debris from the motor housings and rotors.

7. Rebuild the motor to GM1S250.

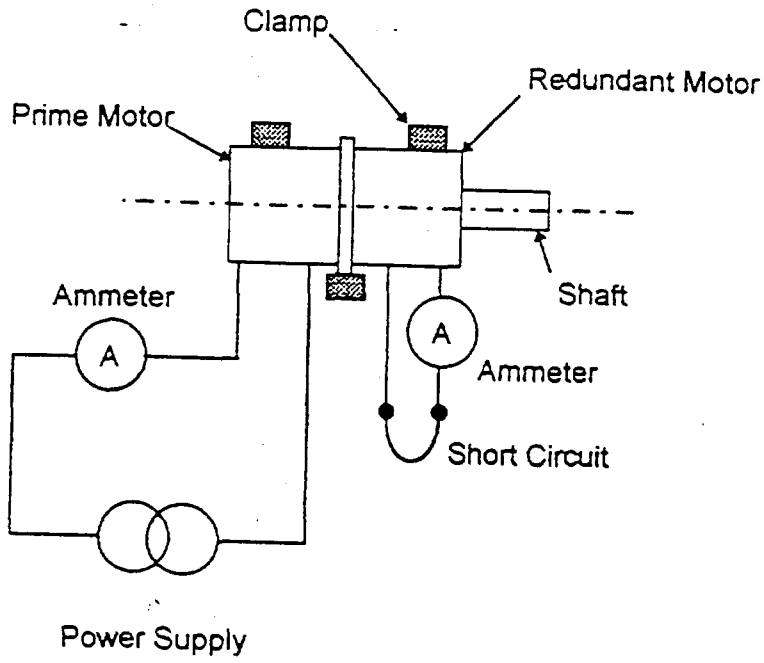
Clamp
Redundant Motor
Prime Motor
Shaft
Ammeter
A
A
Ammeter
Short Circuit
Power Supply

PRE-TEST RESULTS

WINDING RESISTANCE		
Position	Prime Winding Resistance	Redundant Winding Resistance
0°	22.7 Ω	27.5 Ω
90°	22.8 Ω	130.2 Ω
180°	21.3 Ω	27.8 Ω
270°	22.2 Ω	3500 Ω

TABLE 1

ISOLATION	
Prime Winding to Motor Shaft	> 20MΩ MΩ
Redundant Winding to Motor Shaft	> 20MΩ MΩ

TABLE 2

TORQUE	
Motor Shaft Clockwise Rotation	mNm
Motor Shaft Anticlockwise Rotation	mNm

TABLE 3

Design Instruction Sheet (Cont'd)

Project : GOMOS	Number :PO-DIS-MMB-GM-0030 Issue : 1 Sheet 8 of 9 Sht(s)

TEST RESULTS

WINDING RESISTANCE					
	Primary Windings		Redundant Windings		
Time (mins)	Clock-wise	Anticlock-wise	Clock-wise	Anticlock-wise	Current
2	Ω	Ω	Ω	Ω	A
4	Ω	Ω	Ω	Ω	A
6	Ω	Ω	Ω	Ω	A
8	Ω	Ω	Ω	Ω	A
10	Ω	Ω	Ω	Ω	A
12	Ω	Ω	Ω	Ω	A
14	Ω	Ω	Ω	Ω	A
15	Ω	Ω	Ω	Ω	A

Rotation caused by **PRIMARY** motor powered ~~@ 9V~~ 14.5V

TABLE 4

WINDING RESISTANCE					
	Primary Windings			Redundant Windings	
Time (mins)	Clock-wise	Anticlock-wise	Current	Clock-wise	Anticlock-wise
2	Ω	Ω	A	Ω	Ω
4	Ω	Ω	A	Ω	Ω
6	Ω	Ω	A	Ω	Ω
8	Ω	Ω	A	Ω	Ω
10	Ω	Ω	A	Ω	Ω
12	Ω	Ω	A	Ω	Ω
14	Ω	Ω	A	Ω	Ω
15	Ω	Ω	A	Ω	Ω

Rotation caused by **REDUNDANT** motor powered @ ~~9V~~ 14.5V

TABLE 5

MOTOR SPEED		
	Clockwise	Anticlockwise
Primary Powered		
Redundant Powered		

TABLE 6

POST-TEST RESULTS

WINDING RESISTANCE		
Position	Prime Winding Resistance	Redundant Winding Resistance
0°	Ω	Ω
90°	Ω	Ω
180°	Ω	Ω
270°	Ω	Ω

TABLE 7

ISOLATION	
Prime Winding to Motor Shaft	MΩ
Redundant Winding to Motor Shaft	MΩ

TABLE 8

TORQUE	
Motor Shaft Clockwise Rotation	mNm
Motor Shaft Anticlockwise Rotation	mNm

TABLE 9

CHECKOUT OF MOTOR ASSEMBLY

4th May 1999

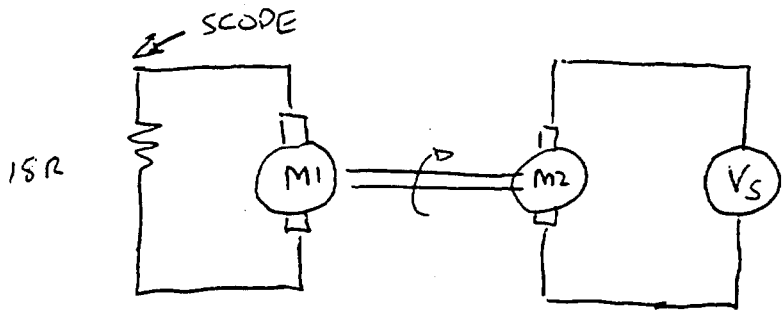

M1 IS TOP MOTOR

M2 IS BOTTOM MOTOR [ONE NEAREST THE OUTPUT SHAFT]

...TH 5 VOLTS APPLIED [VS]

- APPROXIMATELY 1 VOLT DC OUTPUT ABOUT 0.1 SEC PERIOD = 10rps

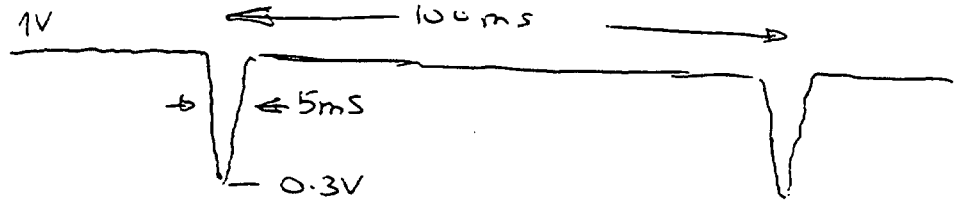

Back emf $\simeq 2 * 1V = 2V \therefore \frac{2}{0.056} \simeq 33$ radians/secs

$\simeq$ 5rps $\therefore$ 10Hz MEANS TWICE PER REV.

reversed the motors $\Rightarrow$ no drop out.

Conclusion

AN IMPROVEMENT BUT STILL A TENDENCY TO 'DROP OUT' TWICE PER REVOLUTION. HOWEVER THERE IS NONE OF THE TENDENCY TO STICK IN ONE POSITION AND NOT START AGAIN WHEN THE VOLTAGE IS GRADUALLY LOWERED AND THEN INCREASED AGAIN.

J.K. Watkins

CHECKOUT OF MOTOR ASSEMBLY

10th MAY 1999

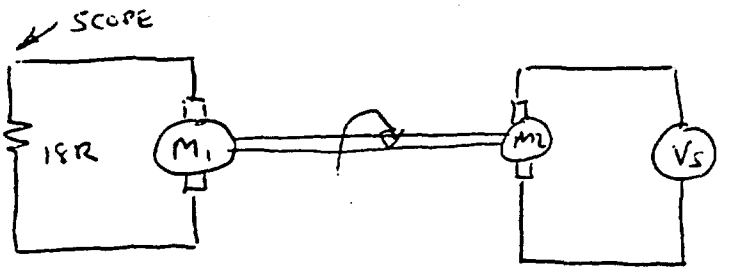

M1 IS THE TOP MOTOR
M2 IS THE BOTTOM MOTOR [NEAREST SHAFT]

M1 IS THE FAULTY MOTOR WHICH HAS HAD ITS COMMUTATOR INSPECTED AND A SPECK OF GLUE REMOVED

NO DROPOUTS WERE OBSERVED.

MOTOR 1 AND MOTOR 2 INTERCHANGED

NO DROPOUTS WERE OBSERVED.

J.K. Wathins
4/5/99

MATRA MARCONI SPACE

MOTOR Nº 2

~~REDLINED FOR HIRDLS SVA 9/10/98 JKW~~

ASSEMBLY

Design Instruction Sheet

Project : GOMOS	Number : PO-DIS-MMB-GM-0030 Issue : 1 Sheet 1 of 9 Sht(s)

Title : MOTOR ASSEMBLY GM1S250 BURN IN TEST	
Equipment affected : Serial Number : Location :	QUALIFICATION & FLIGHT BUILDS BR07836
BOM affected :	NONE
Inspection Requirements : On completion return to :	PLACE A SIGNED COPY OF THIS DIS IN THE LOG BOOK

The object of the task described in this Design Instruction Sheet is to burn in the offload motor assemblies demonstrating acceptable winding characteristics and bedding in motor brushes. Both the prime and redundant motors of the assembly will be tested.

ALL MOTOR ASSEMBLIES (GM1S250) TO BE ASSEMBLED INTO THE SFA (QM & FM) MUST UNDERGO THIS BURN- IN PROCEDURE.

	Originator	Design	Production	P.A.
Signed :	M H Haywood	[signature]	David Ford	[signature]
Name :	M H Haywood	P A Blythe	D W Ford	R V Jamieson
Date :	6-12-95	6.12.95	7.12.95	8.12.95
Action completed signature :				

Distribution :

P R Bevan
P A Blythe
D W Ford
R V Jamieson
DIS File

CONFIGURATION DATA CONTROL
MATRA MARCONI SPACE
(BRISTOL)
DATE 11.12.95
CHRONO. No. 2308

MATRA MARCONI SPACE
P.O. Box 16 Filton, Bristol BS12 7YB

REDLINED FOR POST REBUILD CHECK PERFORMED 12/5/99

MATRA MARCONI SPACE

Design Instruction Sheet (Cont'd)

Project : **GOMOS**	Number :PO-DIS-MMB-GM-0030 Issue : 1 Sheet 2 of 9 Sht(s)

1 Pre-test		
1. Mount the motor assembly in a clamp securely such that the shaft is free to rotate and the cables for the motor windings are easily accessible.	OK ON BENCH	✓
2. Measure the winding resistance of the prime and redundant motor windings at each of four shaft positions as outlined in Table 1. The winding resistance should be approximately ~~350~~ 22.7Ω ±12.5% ie 19.9Ω → 25.5Ω	OK WITHIN LIMITS	✓
3. Measure the isolation between the shaft of the motor assembly and the prime and redundant windings of the motor. The resistance should be greater than 100MΩ. Record the results in Table 2.	>10MΩ * MEASURED	✓ * METER LIMITATION
4. Measure the torque required to rotate the shaft of the motor assembly and record the results in Table 3.	5mNm CW 10mNm ACW	✓
5. Set up the motor assembly and auxiliary equipment as shown in Figure 1.	INTEGRITY NEW TESTS	
6. TOP MOTOR 15Ω LOAD APPLIED : V_O ON SCOPE BOTTOM MOTOR (NEAREST SHAFT) : V_S SUPPLIED $V_S = 5V$ V_O = ~~35~~ 0.7 VOLT MEASURED, NO DROPOUT OBSERVED ON SCOPE $V_S = 4V$ V_O = ~~2.6~~ 0.4 VOLTS " " " " " " $V_S = 3V$ V_O = ~~1.5~~ 0.3 VOLTS " " " " " "		
* 7. REVERSED SITUATION 15Ω LOAD ON BOTTOM MOTOR AND TOP MOTOR DRIVEN. - EXACTLY SAME RESULTS RECORDED.		
8. START UP VOLTAGE, TOP MOTOR, BOTTOM MOTOR OPEN CIRCUIT - STARTS AT ~~3.5~~ 3V WHICH FALLS TO ~~2.5~~ 2.7V WHEN ROTATING - STOPS AT ~~1.5V~~ 2.3V 3V/23Ω ≈ ~~[illegible]~~ 130mA		

9. START UP VOLTAGE, BOTTOM MOTOR, TOP MOTOR OPEN CIRCUIT
- STARTS AT 3.0V WHICH FALLS TO ~~2.5~~ 2.7V WHEN ROTATING
- STOPS AT ~~1.5V~~ 2.3V

3V ~~2.5V~~/23Ω ≈ ~~[illegible]~~ 130mA

* VOLTAGES ARE APPROXIMATE, THEY ARE READ FROM THE DC SUPPLY

MATRA MARCONI SPACE

Design Instruction Sheet (Cont'd)

Project : **GOMOS**	Number :PO-DIS-MMB-GM-0030 Issue : 1 Sheet 3 of 9 Sht(s)

2 Motor Test	
1. Apply the ~~9V~~ 14.5V supply to the prime motor winding. The current drawn by the motor should not exceed ~~0.6A~~ 0.4A (dropping to approximately ~~0.45A~~ 0.3A as the motor warms up during operation). Inform design if motor current exceeds the maximum permissible.	14.5V, 0.36A
2. Measure the speed of rotation of the shaft. The speed of rotation should be approximately 1000rpm. Record the results in Table 6.	1014 ~~950~~ rpm
3. Every 2 minutes remove the power to the motor then measure the increase in resistance in the prime and redundant windings. Rebuild the set up of Figure 1 and reapply power to the primary motor. Record the results in Table 4. The motor is to run for 15 minutes in total. (If the winding resistance increases by more than 40% of its starting value the test is to be aborted and design department informed.)	OK
4. Upon completion of the 15 minute cycle remove the power and reverse the polarity of the power supply so that the motor will turn in the opposite direction.	✓
5. Repeat steps 1 to 4 filling in Tables 4 and 6 as before.	
6. Reconfigure the equipment arrangement shown in Figure 1 such that the redundant motor is powered and the prime motor is short circuited.	✓
7. Apply the ~~9V~~ 14.5V supply to the redundant motor winding. The current drawn by the motor should not exceed ~~0.6A~~ 0.4A (dropping to approximately ~~0.45A~~ 0.3A as the motor warms up during operation).	✓
8. Measure the speed of rotation of the shaft. The speed of rotation should be approximately 1000rpm. Record the results in Table 6.	✓

MATRA MARCONI SPACE

Design Instruction Sheet (Cont'd)

Project : **GOMOS**	Number :PO-DIS-MMB-GM-0030 Issue : 1 Sheet 4 of 9 Sht(s)

9. Every 2 minutes remove the power to the motor then measure the increase in resistance in the prime and redundant windings. Record the results in Table 5. Rebuild the set up and reapply power to the redundant motor. The motor is to run for 15 minutes in total. (If the winding resistance increases by more than 40% of its starting value the test is to be aborted and inform the design department.)	✓
10. Upon completion of the 15 minute cycle remove the power and reverse the polarity of the power supply so that the motor will turn in the opposite direction.	✓
11. Repeat steps 7 to 10 filling in Tables 5 and 6 as before.	✓
12. Allow the motor to cool down.	✓

MATRA MARCONI SPACE

Design Instruction Sheet (Cont'd)

Project : **GOMOS**	Number :PO-DIS-MMB-GM-0030 Issue : 1 Sheet 5 of 9 Sht(s)

3 Post-test

1. Measure the winding resistance of the prime and redundant motor windings at each of four shaft positions as outlined in Table 7.

   The results should reflect initial measurements taken during the Pretest.

2. Measure the isolation between the shaft of the motor and the prime and redundant windings of the motor. The resistance should be greater than 100MΩ. Record the results in Table 8.

3. Measure the torque required to rotate the shaft of the motor and record the results in Table 9.

~~4. Strip the motor down, sufficiently to perform items 5 and 6 for prime and redundant motors.~~

~~5. Inspect the brushes looking for any signs of uneven or excessive wear or damage.~~

~~Design to be present during this operation.~~

~~6. Vacuum out any dust debris from the motor housings and rotors.~~

~~7. Rebuild the motor to GM1S250.~~

✓ SLIGHT INCREASE ON PRIME LOG
22.5Ω (AVERAGE) → 23 (
RED^T 22.7(mΩ) → 22.1Ω (

✓ >10MΩ

NEW INTEGRITY TESTS

4. TOP MOTOR 18Ω LOAD APPLIED ; V_0 ON SCOPE
BOTTOM MOTOR, NEAREST SHAFT : V_S SUPPLIED

$V_S = 5V$	$V_0 = 0.7V$	NO DROPOUTS MEASURED
$V_S = 4V$	$V_0 = 0.5V$	NO DROPOUTS MEASURED
$V_S = 3V$	$V_0 = 0.25V$	NO DROPOUTS MEASURED
$V_S = 7.5V$	$V_0 = 1.3V$	NO DROPOUTS MEASURED

5. REVERSED SITUATION 18Ω LOAD APPLIED TO BOTTOM MOTOR AND TOP MOTOR DRIVEN.

$V_S = 5V$	$V_0 = 0.7V$	NO DROPOUTS MEASURED
$V_S = 4V$	$V_0 = 0.5V$	NO DROPOUTS MEASURED
$V_S = 3V$	$V_0 = 0.25V$	NO DROPOUTS MEASURED
$V_S = 7.5V$	$V_0 = 1.25V$	NO DROPOUTS MEASURED

6. START UP VOLTAGE TO TOP MOTOR, BOTTOM O/C. : STARTS AT 3 VOLT
VERY LITTLE DROP IN VOLTAGE WHEN IT STARTS TO MOVE. BACK TO 2 TO STOP

7. REPEAT ON BOTTOM MOTOR. STARTS AT 3V AND OFF AT 2.7V.

MATRA MARCONI SPACE

Design Instruction Sheet (Cont'd)

Project : **GOMOS**	Number :PO-DIS-MMB-GM-0030 Issue : 1 Sheet 6 of 9 Sht(s)

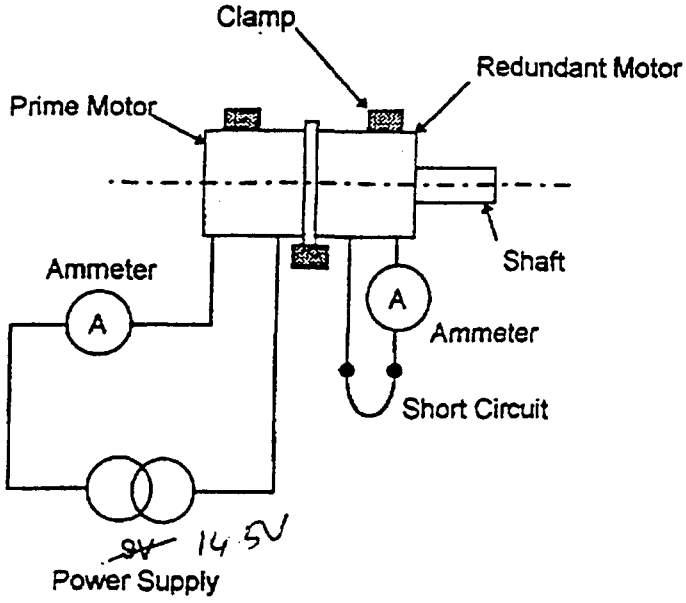

FIGURE 1

MATRA MARCONI SPACE

Design Instruction Sheet (Cont'd)

Project : **GOMOS**	Number : PO-DIS-MMB-GM-0030 Issue : 1 Sheet 7 of 9 Sht(s)

PRE-TEST RESULTS

WINDING RESISTANCE				
Position	Prime Winding Resistance		Redundant Winding Resistance	
0°	22.4	Ω	22.5	Ω
90°	22.6	Ω	23.0	Ω
180°	22.5	Ω	22.6	Ω
270°	22.5	Ω	22.7	Ω

*

TABLE 1

ISOLATION	
Prime Winding to Motor Shaft	> 10 MΩ
Redundant Winding to Motor Shaft	> 10 MΩ

TABLE 2

LOOKING ON SHAFT CW

TORQUE	
Motor Shaft Clockwise Rotation	5 mNm
Motor Shaft Anticlockwise Rotation	10 mNm

TABLE 3

.45 Nm x 1C

* NO DATUM, APPROXIMATELY 90°

MATRA MARCONI SPACE

Design Instruction Sheet (Cont'd)

Project : GOMOS	Number :PO-DIS-MMB-GM-0030 Issue : 1 Sheet 8 of 9 Sht(s)

TEST RESULTS

WINDING RESISTANCE					
	Primary Windings		Redundant Windings		
Time (mins)	Clock-wise	Anticlock-wise	Clock-wise	Anticlock-wise	Current
2	23.6Ω	23.9Ω	22.5Ω	23.0Ω	0.36A
4	24.5Ω	24.3Ω	24.0Ω	25.3Ω	0.36A
6	24.9Ω	25.0Ω	23.7Ω	21.8Ω	0.36A
8	25.4Ω	24.9Ω	24.0Ω	25.0Ω	0.36A
10	24.6Ω	25.7Ω	23.5Ω	25.7Ω	0.36A
12	25.6Ω	24.4Ω	23.8Ω	25.1Ω	0.36A
14	25.6Ω	25.6Ω	24.9Ω	24.9Ω	0.36A
15	25.3Ω	25.3Ω	23.9Ω	26.1Ω	0.36A

PRIME WINDING (DRIVEN)

Rotation caused by **PRIMARY** motor powered @ ~~9V~~ 14.5V

Redundant Winding (DRIVEN)

TABLE 4

WINDING RESISTANCE					
	Primary Windings			Redundant Windings	
Time (mins)	Clock-wise	Anticlock-wise	Current	Clock-wise	Anticlock-wise
2	23.9Ω	25.9Ω	0.36A	23.2Ω	24.9Ω
4	24.7Ω	25.8Ω	0.35A	24.0Ω	25.7Ω
6	24.8Ω	26.4Ω	0.36A	24.3Ω	25.5Ω
8	25.3Ω	26.4Ω	0.35A	24.5Ω	25.3Ω
10	25.4Ω	26.4Ω	0.35A	24.7Ω	25.3Ω
12	25.6Ω	25.7Ω	0.35A	24.9Ω	25.0Ω
14	26.0Ω	26.2Ω	0.35A	25.0Ω	25.4Ω
15	26.4Ω	26.7Ω	0.35A	24.9Ω	24.8Ω

Rotation caused by **REDUNDANT** motor powered @ ~~9V~~ 14.5

TABLE 5

TABLE 6

PRIME CW = ~~[illegible]~~ 1014 rpm
PRIME ACW = 1027 rpm
RED^T CW = 1038 rpm
RED^T ACW = 1034 rpm

MATRA MARCONI SPACE

Design Instruction Sheet (Cont'd)

Project : GOMOS	Number :PO-DIS-MMB-GM-0030 Issue : 1 Sheet 9 of 9 Sht(s)

POST-TEST RESULTS

MATRA MARCONI SPACE

Design Instruction Sheet (Cont'd)

Project : GOMOS	Number : PO-DIS-MMB-GM-0030 Issue : 1 Sheet 9 of 9 Sht(s)

POST-TEST RESULTS

AFTER COOLING DOWN OVERNIGHT

WINDING RESISTANCE		
Position	Prime Winding Resistance	Redundant Winding Resistance
0°	24.9 Ω	22.4 Ω
90°	23.7 Ω	22.4 Ω
180°	21.5 Ω	22.0 Ω
270°	24.2 Ω	21.4 Ω

TABLE 7

ISOLATION	
Prime Winding to Motor Shaft	>10MΩ MΩ
Redundant Winding to Motor Shaft	>10MΩ MΩ

TABLE 8

TORQUE	
Motor Shaft Clockwise Rotation	5 mNm
Motor Shaft Anticlockwise Rotation	10 mNm

TABLE 9

MATRA MARCONI SPACE UK

OCCURRENCE REPORT

PROJECT: HIRDLS

CHARGE No: 17143 533002

REF No: HRNCR00002 M

DATE: 20/7/99

SHEET 1 of 8

DESCRIPTION: SVA

EIC:

FOUND DURING: INTEG

MODEL: FM

ORIGINATOR NCR No: 3

DRG/SPEC No: HR2L040

ISSUE: 02

TITLE: SPACE VIEW ALBEDO ASSEMBLY

SOURCE CODE:

SUPPLIER: MMS

MANUFACTURER: MMS

BATCH No: ~~MF~~ AIT R019204 0

SERIAL No: FM

QTY RECEIVED: 1

QTY ACCEPTED: 0

SHORT DESCRIPTION OF OCCURRENCE: HIGH RESISTANCE FOUND IN PRIME MOTOR

NON-CONFORMANCE REPORT		REWORK REQUEST		ANOMALY INVESTIGATION		STAMP/SIGN AND DATE ALL ENTRIES
PROV	CONFIRM	PROV	CONFIRM	PROV	CONFIRM	

DETAILS OF OCCURRENCE

During Test TP - MMS - 451 Baseline Functional Test it was found that the Resistance of the Prime Motor Winding was significantly higher than previous Motor Burn in Tests indicated.

Diagnostic Checks.

1. Checked out SVA Harness and found it was satisfactory.
2. Test equipment checked.
3. Connected meter at Motor Flying Leads, a High Resistance was also found.

HARDWARE RECOVERY	ACCEPT PAR DATE	DEFINED RE DATE	COMPLETE QC DATE

FINAL COUNT	ACCEPT	REJECT	SCRAP	CONCESS
	✓			

LEVEL STATUS	REQUIREMENT MET	CLASS	MRB	ECR/EO	OFF LINE INVEST
N-1	Yes	Minor			
N					
N+1					
N+2					

MODELS AFFECTED STATUS	PROJECT TECHNICAL CLOSURE: MODEL	ENGINEERING	PA
	MM		
	EM		
	QM		
	FM	NE	DAB
	GS		
	SPARES		

DEFECT STATISTICS	A	B	C	D	E	F	G	H	J	K	L	M	N	P	Q	R	S	T	U	V	W	X	Y	Z

CLOSURE BY PA/QC:

SIGN: DG Bowyer

DATE: 20/1/00

SS0242

STAMP/SIGN AND DATE ALL ENTRIES

FURTHER VALIDATION OF RESISTANCE READINGS WERE PERFORMED BY MONITORING THE STALL CURRENT AT A RANGE OF VOLTAGES FROM 5 TO 30 VOLTS.

RESULTS SHOWN BELOW

REDUNDANT MOTOR

V	I F/O	R F/O Ω	I F/C	R F/C Ω
5	0.13	38.5	0.14	35.7
10	0.28	35.7	0.28	35.7
15	0.43	34.9	0.41	36.6
20	0.55	36.4	0.56	35.7
25	0.69	36.2	0.70	35.7
30	0.81	37.0	0.80	37.5

PRIME MOTOR

V	I F/O	R F/O Ω	I F/C	R F/C Ω
5	0.095	52.6	0.097	51.5
10	0.17	58.8	0.19	52.6
15	0.25	60.0	0.27	55.6
20	0.39	51.3	0.36	55.6
25	0.42	59.5	0.41	60.9
30	0.56	53.6	0.56	53.6

THE RESULTS ABOVE INCLUDE A 12 Ω RESISTOR.

NOTE: REDUNDANT MOTOR = 23 Ω APPROX
PRIME MOTOR = 43 Ω APPROX.

STAMP/SIGN AND DATE ALL ENTRIES

MOTOR ISOLATED FROM HARNESS, HIGH RESISTANCE STILL PRESENT.

HARNESS TOTALLY REMOVED FROM PRIME & REDUNDANT MOTORS.

MOTORS REMOVED FROM GEARHEAD ADAPTOR PLATE.

UNDER DESIGN AUTHORITY (R. COOPE) THE FOLLOWING STEPS WERE TAKEN TO STRIP DOWN THE SVA MOTOR ASSY.

1. DUST CAP # 11 + FIXINGS 3OFF # 14 REMOVED.
2. 4 OFF EQUISPACED 0.2 PLASTIC SHIMS INSERTED BETWEEN ROTOR & STATOR.
3. MOTOR HOUSING FIXINGS (# 13 3OFF) REMOVED
4. REDUNDANT MOTOR HOUSING #7 + MAGNET ASSY REMOVED FROM SHAFT # 3 AND ROTOR ASSY.
5. SPRING CLAMPS FITTED TO PRIME MOTOR BRUSHES TO HOLD BRUSHES AWAY FROM COMMUTATORS.
6. 4 OFF EQUISPACED 0.2 PLASTIC SHIMS INSERTED BETWEEN PRIME ROTOR & STATOR.
7. PRIME & REDUNDANT MOTORS + SHAFT # 3 WITHDRAWN FROM PRIME MOTOR STATOR HOUSING # 1.
8. ANALYSE MOTOR.

STAMP/SIGN AND DATE ALL ENTRIES

8.1 ANALYSIS.

UNDER MICROSCOPE IT WAS FOUND THAT THE REDUNDANT COMMUTATOR TRACK WAS A CLEAN POLISHED SURFACE FINISH.
THE PRIME MOTOR TRACK WAS FOUND TO HAVE A BUILD UP OF CONTAMINATION AT BOTH ENDS OF EACH COMMUTATOR PLATE AND A SPREAD OF CONTAMINATION ALONG THE CENTRE AS SHOWN IN PHOTOGRAPHS.
DUE TO PROBLEM FOUND WITHIN THE MOTOR WINDINGS PHOTOGRAPHS INSIGNIFICANT.

8.2 FURTHER RESISTANCE CHECKS WERE PERFORMED BETWEEN COMMUTATOR PLATES ON THE PRIME MOTOR, HIGH RESISTANCES WERE FOUND BETWEEN PLATES IN 2 POSITIONS ON THE MOTOR, HIGHLIGHTING A PROBLEM WITHIN THE MOTOR WINDINGS. RESULTS OF THESE CHECKS ARE FOUND ON SHEET 5.

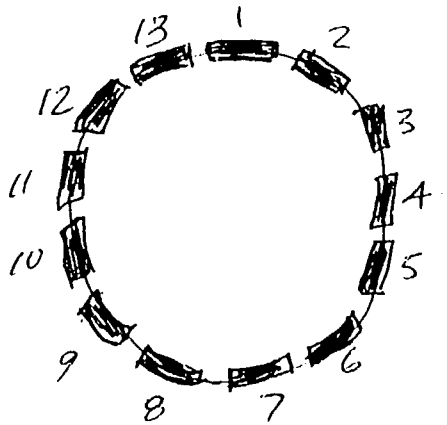

SURVEY RESISTANCE BAR No's	PRIMO MOTOR RESISTANCE (Ω) 1st	2ND		RODUNDANT MOTOR
1 - 2	16.2	15.9		14.4
2 - 3	16.1	15.8		14.5
3 - 4	16.3	16.0		14.5
4 - 5	16.1	15.8		14.3
5 - 6	16.2	15.8		14.3
6 - 7	16.3	15.9		14.4
7 - 8 *	86.5	85.9	*	14.4
8 - 9	16.2	15.7		14.5
9 - 10	16.2	15.7		14.4
10 - 11	16.7	16.0		14.5
11 - 12		15.7		14.3
12 - 13		15.8		14.2
		85.9	*	

SHEET 5.

MATRA MARCONI SPACE UK	PROJECT: HIRDLS	REF No: HL NC 2 0 0 0 0 2 M
CONTINUATION SHEET	CHARGE No: 17143 533002	SHEET 6 of 8

STAMP/SIGN AND DATE ALL ENTRIES

8.3 MOTOR DEEMED UNUSABLE MOTOR ASSY TO BE DISASSEMBLED, NEW MOTORS TO BE ORDERED.

8.4 ON DISASSEMBLY OF MOTORS FROM SHAFT, SHAFT DAMAGED. NEW SHAFT TO BE ORDERED.

8.5 ALL MOTOR TO SHAFT COMPONENTS DISASSEMBLED.

S. YARDLEY
AT.
3/11/99.

Two new motors ordered to same MMS HIRDLS spec SP-MMS-356 and same supplier. MMS Purchase Order 21141030C applies. US State Dept License given to Kollmorgen to supply motors to MMS.

I.K. STEWART
HIRDLS PROJECT MGR.

MOTORS RECIEVED S/Nos 99L31687 & 99L31688 INSPECTION CARRIED OUT, RESISTANCE CHECK PERFORMED ON COMMUTATOR TRACKS, RESULTS ALL NOMINAL.

MOTORS ASSEMBLED AS PER OFFLOAD MOTOR ASSEMBLY PROCEDURE PO - PR-MMB-GM-0025.

MOTOR ASSEMBLY. TESTED AS PER MOTOR ASSEMBLY GM1520 BURN IN TEST PO - DIS - MMB-GM-0030.

TEST RESULTS NOMINAL.

MOTOR ASSY INTEGRATED TO SVA, REQUIRE FLYING LEADS & THERMISTORS TO BE REWIRED INTO SVA DC HARNESS.

11/1/00.

REFER TO FRONT SHEET FOR CLOSURE SIGNATURES

SS0242

MATRA MARCONI SPACE UK	PROJECT: HIRDLS	REF No: HR NCR00002MS
CONTINUATION SHEET	CHARGE No: 17143 533002	SHEET 7 of 8

STAMP/SIGN AND DATE ALL ENTRIES

Operation 2 in Motor test is not required as the angular velocity/voltage characteristic is known from previous HIRDLS motor tests

RTS Coupe 11-1-00

Table 7 Post-test winding resistance.

Redundant motor at 90° the resistance is lower than the other results. This is acceptable for use

RTS Coupe 20-1-00

REFER TO FRONT SHEET FOR CLOSURE SIGNATURES

SS0242

MATRA MARCONI SPACE UK

CONTINUATION SHEET

PROJECT: HIRDLS

CHARGE No: 17 143 533002

REF No: HR NCR00002 KJS

SHEET 8

	STAMP/SIGN AND DATE ALL ENTRIES
REWIRE MOTORS AND THERMISTORS INTO SVA HARNESS	R. French.
DURING PRELIMINARY TESTING OF THE SVA IT WAS FOUND THAT THE MOTOR CONNECTIONS HAD BEEN ~~CONNECTED~~ INCORRECTLY CONNECTED, THE FLYING LEAD CONNECTIONS AT PINS 3 & 14 AND 4 & 9 NEED TO REVERSED.	11/1/00
Route unit to manufacturing for motor connections to be reversed	N Geel 11/1/00
ABOVE WORK CARRIED OUT.	B. Sam.
BASELINE AND PRELIMINARY TEST COMPLETE MOTORS FOUND TO FUNCTION OK.	13/1/00
This NCR may now be closed.	DCB 20/1/00

REFER TO FRONT SHEET FOR CLOSURE SIGNATURES

SS0242

SECTION 4

Replacement Motor Assembly HR2L004

KOLLMORGEN
Inland Motor

501 FIRST ST. • RADFORD, VA. 24141
PHONE 540-638-8045
FAX: 540-731-4185

SHIP TO (MATRA MARCONI SPACE (UK) LTD)

C/O ATLAS AIR,HEATHROW AIRPORT
UNIT 18,HEATHROW INTL TRADING
EST,GREEN LANE,HOUNSLOW,
MIDDLESEX, ENGLAND TW4 6HU
MARTIN PETERS 0181-7077325

901789

SALES ORDER NO. 043254
INVOICE NUMBER 966626

PARTIAL X COMPLETE

CUSTOMER ORDER NO./CONTRACT NO.	VIA	DATE
21141030C	DHL 8198229292 COLLECT	12-01-99

QUANTITY	MODEL OR PART NO.	DESCRIPTION	UNIT PRICE
2	QT-0787-B	TORQUER	3,393.00
		S/N: 99L31687 & 88	
		FRAMELESS DC MOTOR/ 8501.31.3000	
		U.S. DEPT. OF STATE EXPORT LICENSE #	
		7 74506 //// VAT # GB582537322	
		C O U N T R Y O F O R I G I N U.S.A.	
		END USER : HIRDLS UK, RUTHERFORD	
		APPLETON LAVORATORY/ CHILTON DIDCAT/	
		OXFORDSHIRE ENGLAND OX11 0QX	
		FOREIGN CONSIGNEE;	
		MATRA MARCONI SPACE (UK) LTD	
		GUNNELS WOOD ROAD	
		STEVENAGE HEARTS	
		SG1 2AS ENGLAND UK	
		TOTAL OF 1 FIBERBOARD BOX = 2 LBS	
		DIM: 12-1/4 X 12-1/4 X 6-3/4 INCHES	
		ENCLOSED: STATE DEPT LICENSE, INVOICES,	
		PACKING LIST/ SED/ SSE/ PURCHASE ORDER	
	LOG # 99.29.36		
			$6,786.00

THESE COMMODITIES, TECHNOLOGY OR SOFTWARE WERE EXPORTED FROM THE UNITED STATES IN ACCORDANCE WITH THE EXPORT ADMINISTRATION REGULATION DIVERSION CONTRARY TO U.S. LAW PROHIBITED.

RECEIVED BY _____ DATE _____

ALL APPLICABLE PROVISIONS OF THE FAIR LABOR STANDARDS ACT OF 1938, AS AMENDED, HAVE BEEN COMPLIED WITH.

STANDARD CERTIFICATION OF CONFORMANCE

THIS IS TO ATTEST THAT BRAND NEW PRODUCT WITH MANUFACTURE A QUALITY SYSTEM GUARANTEED WITH ANSI/ASQC Q-9001 REGISTRATION AND WITH ALL OF THE QUALITY CONTROLS WE DO HEREBY CERTIFY THAT THE ABOVE QUANTITY OF UNITS WERE MANUFACTURED IN ACCORDANCE WITH THE APPLICABLE CITED DRAWINGS/ INSTRUCTIONS/ SPECIFICATIONS IN THE ABOVE REFERENCED PURCHASE ORDER. THE DRAWINGS AVAILABLE FOR EXAMINATION EVIDENCE OF MANUFACTURING TEST, INSPECTION AND/OR CONTRACTUAL RECORDS.

CERTIFIED ON THE ABOVE DATE BY THE KOLLMORGEN COMPANY REPRESENTATIVE 12-01-99

DANIEL H. SHUFFER, QUALITY MANAGER

CoC

KOLLMORGEN

501 First Street
Radford, VA 24141
Ph. 540-639-9045

SHIPPERS SECURITY ENDORSEMENT

FEDERAL AVIATION REGULATIONS (F. A. R. PART 109)

DATE: 12/01/99

TO ALL AIRLINES:

SHIPPER: KOLLMORGEN / INLAND MOTOR
501 FIRST STREET
RADFORD, VA 24141
PHONE: 540-639-9045

REF: KOLLMORGEN/ INLAND MOTOR INVOICE: 966696
KOLLMORGEN/INLAND MOTOR JOB: 043254
CUSTOMER PURCHASE ORDER: 21141030C

I CERTIFY THAT THIS SHIPMENT DOES NOT CONTAIN ANY UNAUTHORIZED EXPLOSIVE OR DESTRUCTIVE DEVICES. I AM AWARE THAT THIS SHIPMENT IS SUBJECT TO APPROPRIATE AVIATION SECURITY CONTROLS AND OTHER RELEVANT GOVERNMENT REGULATIONS. I AM AWARE THAT THIS ENDORSEMENT AND ORIGINAL SIGNATURE, ALONG WITH OTHER SHIPPING DOCUMENTS, WILL BE RETAINED ON FILE UNTIL THIS SHIPMENT IS DELIVERED.

TOTAL OF 1 FIBERBOARD BOX = 2 LBS
DIM: 12-1/4 X 12-1/4 X 6-3/4 INCHES

Doris Dickerson
DORIS DICKERSON
SENIOR SHIPPING COORDINATOR

PERSON ACCEPTING CARGO: _____

FORM 7525-V (1-90) SHIPPER'S EXPORT DECLARATION OMB No. 0607-0018

1. EXPORTER (Name and address including ZIP code)
KOLLMORGEN/ INLAND MOTOR
501 FIRST STREET
RADFORD VA ZIP CODE 24141

PO # 211410300/ 043254/966686

2. DATE OF EXPORTATION

3. BILL OF LADING/AIR WAYBILL NO.
8198829292 DHL

4. EXPORTER EIN (IRS) NO.
04-2151861

5. PARTIES TO TRANSACTION
☐ Related ☒ Unrelated

6. ULTIMATE CONSIGNEE
HIROLS UK/ RUTHERFORD APPLETON LABORATORY
CHILTON DIDCAT
OXFORDSHIRE ENGLAND OX11 0QX

7. INTERMEDIATE CONSIGNEE
MASRA MARCONI SPACE (UK) LTD
GUNNELS WOOD ROAD/ STEVENAGE HERTS
SG1 2AS ENGLAND

8. FORWARDING AGENT
ATLAS AIR HEATHROW AIRPORT
UNIT 18, HEATHROW INTL TRADING EST, GREEN
LANE, HOUNSLOW, MIDDLESEX, ENGLAND TW4 6HU

KOLLMORGEN

Inland Motor

THESE COMMODITIES ARE AUTHORIZED BY THE US GOVERN
FOR EXPORT ONLY TO (COUNTRY OF ULTIMATE DESTINATI
LISTED ON THE LICENSE).. THEY MAY NOT BE RESOLD,
DIVERTED, TRANSFERRED, OR OTHERWISE BE
DISPOSED OF IN ANY OTHER COUNTRY, EITHER IN THEIR
ORIGINAL FORM OR AFTER BEING INCORPORATED THROUGH
AN INTERMEDITATE PROCESS INTO OTHER END-ITEMS,
WITHOUT THE PRIOR WRITTEN APPROVAL OF THE
U.S. DEPARTMENT OF STATE.

9. PORT (STATE) OF ORIGIN OR FTZ NO.
VA

7. COUNTRY OF ULTIMATE DESTINATION
ENGLAND

9. LOADING PIER (Vessel only)

9. MODE OF TRANSPORT (Specify)
AIR DHL

10. EXPORTING CARRIER

11. PORT OF EXPORT

12. PORT OF UNLOADING (Vessel and air only)

13. CONTAINERIZED (Vessel only)
☐ YES ☐ NO

THESE COMMODITIES, TECHNOLOGY OR SOFTWARE WERE
EXPORTED FROM THE UNITED STATES IN ACCORDANCE
WITH THE EXPORT ADMINISTRATION REGULATION
DIVERSION CONTRARY TO U.S. LAW PROHIBITED

14. SCHEDULE B DESCRIPTION OF COMMODITIES
15. MARKS, NOS., AND KINDS OF PACKAGES } (Use columns 17-19)

OF (16)	SCHEDULE B NUMBER (17)	CHECK DIGIT	QUANTITY – SCHEDULE B UNIT(S) (18)	SHIPPING WEIGHT (Gross) (19)	VALUE (U.S. dollars, omit cents) (Selling price or cost if not sold) (20)
D	8501.31.5000 QT-0787-B DC TORQUE MOTOR S/N: 98L81687 & 88 TOTAL OF 1 BOX = 2 LBS DIM: 12-1/4 X 12-1/4 X 6-3/4 INCHES		2		6,786.00

21. VALIDATED LICENSE NO. / GENERAL LICENSE SYMBOL
U.S. DEPT. OF STATE EXPORT LICENSE

22. ECCN (When required)
7 74506

23. I AM authorized officer or employee
DORIS B. DICKERSON

The exporter authorizes the forwarder named above to act as forwarding agent for export control and customs purposes.

24. I certify that all statements made and all information contained herein are true and correct and that I have read and understand the instructions for preparation of this document, set forth in the "Correct Way to Fill Out the Shipper's Export Declaration" (available Bureau of Census, Wash., DC 20233). I understand that civil and criminal penalties, including forfeiture and fine, may be imposed for making false or fraudulent statements herein, failing to provide the requested information or for violation of U.S. laws on exportation. (13 U.S.C. Sec. 305; 22 U.S.C. Sec. 401; 18 U.S.C. Sec. 1001; 50 U.S.C. App. 2410).

Signature

Title
SR. SHIPPING COORDINATOR

Date
12/01/98

Confidential — For use solely for official purposes authorized by the Secretary of Commerce (13 U.S.C. 301(g)).

Shipments are subject to inspection by U.S. Bureau of Export Enforcement.

25. AUTHENTICATION (When required)

Form FIDELIBID Printed and Sold by Over 5 Commercial Information Publishing, 550 Eagle Avenue, Greenville, PA 16125 • 800/442-7003

REORDER 736Jul467-0 QTY 100

3/04/96 1

DHL

Shipment Airwaybill (Non-negotiable)
1-800-CALL-DHL in USA only

PPF
CMG

8198229292
Quote this shipment number in any inquiry

ORIGIN: ROA
DESTINATION:

1 From/Shipper

Account no.: 786300167
Shipper's reference: 943254/966696

Company name: KOLLMORGAN-INLAND MOTOR

Shipper's name: DORIS B. DICKERSON

Address: 506 1ST STREET
RADFORD VA

Zip code (required): 24141
Phone/Fax (include area code): (540)639-9045

2 To/Recipient

Company name: MATRA MARCONI SPACE

Attention: MARTIN PETERS 0181 7077335

Delivery address: UNIT 18, HEATHROW INTL TRADING EST, GREEN LANE, HOUSLOW MIDDLESEX, ENGLAND TW4 6HU

Zip code (required): TW4 6HU
Phone/Fax (include area code): 0181 7077335

3 Shipment details

Service:
- [ ] U.S. DOMESTIC
- [X] INTERNATIONAL DOCUMENT
- [ ] INTERNATIONAL NON-DOCUMENT
- [ ] WORLDWIDE (express/economy) (circle one)

Special Services (see charges may apply):
- [ ] SATURDAY DELIVERY
- [ ] FOB (specify location or terms)
- [ ] OTHER (specify)

Payment Options (all options available to all countries):
- [ ] Shipper's account
- [X] Recipient [ ] Third party
- Acct. no. (750603927) 960294943
- [ ] Credit card/charge card (circle one)
- No. ____
- Expiry ____ Type ____
- Shipment insurance: U.S.$ ____ (if declared, enter amount below; insure all value)

Full description of contents:
QT-0787-B/ DC TORQUER MOTOR
US DEPT OF STATE EXPORT LICENSE # 7 74508
MATRA DHL ACC # 960294943

International non-document shipments only
Attach original and three copies of a Commercial Invoice

Declared value for customs (in US$): 6,786.00
Export license no./Symbol/Value: 7 74508
Harmonized Schedule B no./Prefix: 8501.31.3000
Ultimate destination: ENGLAND
Shipper's EIN/SSN: 04-2151861
This shipment is bonded by the U.S. for the ultimate destination named above. Diversion contrary to U.S. law is prohibited.

Destination duties/taxes (if DHL bills recipient pays duties/taxes):
[X] Recipient [ ] Shipper [ ] Other ____

4 Pcs/Weight/Size

No. of pieces: 1
Weight (if DHL Express Document packaging is used, enter 1/2): 8
Dimensions (in inches): 12-1/4 X 12-1/4 X 6-3/4 INCHES
(length, width, height)

Description of contents	Weight

Duties	Charges/Services
	Special services
	Insurance
Other Bill Exp. Carrier	
TOTAL	

Transport collect sticker No.

Pickup by/at: ____
Time: ____
Date: ____

5 Payment authorization and signature

Complete sections 1-5. You are making 4 copies, please type.

Shipper's signature: [signature]
Date: 12-04-99

DHL AIRWAYS, INC. • 333 TWIN DOLPHIN DRIVE, REDWOOD CITY, CA 94065 Original (DHL Billing) Copy

Title: **Individual Acceptance Test Procedure for the QT-0787 Torque Motor**

Written By: C. Wynn | Date: 8/30/95:bw | Rev.: B
Approved By: D. Hale | Date: 8/31/95 | Sheet No. 4 of 5

TEST DATA SHEET

Customer No. _____ Inland Model QT-0787-B Date 11-23-99
Serial No. 99L31688 Job No. 043254 Tester H.S

1. Visual: Check if OK ✓ (✓)

2. Brush Force: 14.0, 13.0, 15.0, 15.0 grams

3.A Insulation Resistance: 10K megΩ

3.B Dielectric Strength: Check if OK ✓ (✓)

3.C Insulation Resistance: 10K megΩ

4. Rotation: Check if OK ✓ (✓)

5. Resistance: 8.35, 8.38, 8.32, 8.35, 8.34 volts
20.88, 20.95, 20.90, 20.88, 20.85 ohms
20.87 avg. ohms

6.A Peak Torque: oz·in 12.75 CW
oz·in 12.60 CCW

6.B Torque Sensitivity:

8.7 8.4 oz·in/amp 7.75 CW
7.2 6.8

8.6 8.4 oz·in/amp 7.80 CCW
7.4 7.0

7. Friction Torque: amp .044 CW
amp .045 CCW

8. Shorted Turns Test: amp .047 CW
amp .047 CCW

volts 7.02 CW
volts 7.05 CCW

Title: **Individual Acceptance Test Procedure for the QT-0787 Torque Motor**

Written By: C. Wynn | Date: 8/30/95:bw | Rev.: B
Approved By: D. Hale | Date: 8/31/95 | Sheet No. 4 of 5

TEST DATA SHEET

Customer No. _____ Inland Model QT-0787-B Date 11-23-99
Serial No. 99L31687 Job No. 043254 Tester H. S

1. Visual: Check if OK ✓ (✓)

2. Brush Force: 15.0, 14.0, 13.0, 14.0 grams

3.A Insulation Resistance: 10K megΩ

3.B Dielectric Strength: Check if OK ✓ (✓)

3.C Insulation Resistance: 10K megΩ

4. Rotation: Check if OK ✓ (✓)

5. Resistance: 8.27, 8.34, 8.32, 8.31, 8.34 volts
20.68, 20.85, 20.80, 20.78, 20.85 ohms
20.79 avg. ohms

6.A Peak Torque: oz·in 12.65 CW
oz·in 13.20 CCW

6.B Torque Sensitivity:

8.8 8.5
7.3 7.0
oz·in/amp 7.90 CW

8.9 8.5
7.2 6.8
oz·in/amp 7.85 CCW

7. Friction Torque: amp .045 CW
amp .045 CCW

8. Shorted Turns Test: amp .048 CW
amp .048 CCW

volts 7.08 CW
volts 7.03 CCW

Title: **Individual Acceptance Test Procedure for the QT-0787 Torque Motor**

Written By: C. Wynn Date: 8/30/95:bw Rev.: B
Approved By: D. Hale Date: 8/31/95 Sheet No. 5 of 5

TEST DATA SHEET - continued

9. Thermal Cycle: 99L31687

First Cycle	Insulation Resistance		Continuity	
Ambient		megohms	✓	Check if OK
-40°C		megohms	✓	Check if OK
+70°C		megohms	✓	Check if OK

Six Cycles Completed (Check if done) ✓ (✓)

Last Cycle	Insulation Resistance		Continuity	
Ambient		megohms	✓	Check if OK
-40°C		megohms	✓	Check if OK
+70°C		megohms	✓	Check if OK

10. Post Thermal Cycle Tests:

(3.A) Insulation Resistance: 10K megohms
(3.B) Dielectric Strength: Check if OK ✓ (✓)
(3.C) Insulation Resistance: 10K megohms

(5.) Resistance: 8.34, 8.31, 8.32, 8.34, 8.27 volts
20.85, 20.78, 20.80, 20.85, 20.65 ohms
20.79 avg. ohms

(6.A) Peak Torque: oz·in 12.65 CW
oz·in 13.20 CCW

(6.B) Torque Sensitivity:

8.8 8.5
7.3 7.0
oz·in/amp 7.90 CW

8.9 8.5
7.2 6.8
oz·in/amp 7.85 CCW

(7.) Friction Torque: amp .045 CW
amp .045 CCW

11. Final Inspection: Check if done. ✓ (✓)
2.3 ounces

Title: **Individual Acceptance Test Procedure for the QT-0787 Torque Motor**

Written By: C. Wynn Date: 8/30/95:bw Rev.: B
Approved By: D. Hale Date: 8/31/95 Sheet No. 5 of 5

TEST DATA SHEET - continued

9. Thermal Cycle: 9921 31688

First Cycle	Insulation Resistance		Continuity	
Ambient		megohms	✓	Check if OK
-40°C		megohms	✓	Check if OK
+70°C		megohms	✓	Check if OK

Six Cycles Completed (Check if done) ✓ (✓)

Last Cycle	Insulation Resistance		Continuity	
Ambient		megohms	✓	Check if OK
-40°C		megohms	✓	Check if OK
+70°C		megohms	✓	Check if OK

10. Post Thermal Cycle Tests:

(3.A) Insulation Resistance: 10K megohms
(3.B) Dielectric Strength: Check if OK ✓ (✓)
(3.C) Insulation Resistance: 10K megohms

(5.) Resistance: 8.34, 8.35, 8.32, 8.38, 8.35 volts
20.85, 20.88, 20.90, 20.95, 20.88 ohms
20.87 avg. ohms

(6.A) Peak Torque: oz·in 12.75 CW
oz·in 12.60 CCW

(6.B) Torque Sensitivity:

8.7 8.4
7.2 6.8
oz·in/amp 7.75 CW

8.6 8.4
7.4 7.0
oz·in/amp 7.80 CCW

(7.) Friction Torque: amp .044 CW
amp .045 CCW

11. Final Inspection: Check if done. ✓ (✓)
2.3 ounces

KOLLMORGEN
Inland Motor

Critical Dimension Certification

Inspector N. Lox Inland Model No. QT-0787-B Job No. 043254

Date 11-10-99 Inland Dwg. No. C-114932 Customer Dwg. No. _____ Rev. _____

SERIAL NUMBERS 99L -

ITEM	SPECIFICATION	-31687	-31688				
1	1.124 - 1.125	1.1246	1.1248				
2	.187 - .188	- OK TO	PLUG GAGE -				
3	.745 MAX.	✓	✓				
4	.125 MAX.	✓	✓				
5	.123 MAX.	✓	✓				
6	.473 - .477	✓	✓				
7	1.125 MAX.	✓	✓				
8	.125 MAX	✓	✓				
9	WEIGHT - 2.65 OZ. MAX.	✓	✓				
10							
11							
12							
13							
14	Identification	✓	✓				
15	Visual	✓	✓				

ITEM	SPECIFICATION						
1							
2							
3							
4							
5							
6							
7							
8							
9							
10							
11							
12							
13							
14	Identification						
15	Visual						

I certify that the dimensions listed on this sheet are actual dimensions and further that the dimensions meet the specification requirements for that feature.

Certified by: N. Lox Title: *Inspector* Date: 11-10-99

53M

QCP9.3 5/96

GOMOS

TITLE : OFFLOAD MOTOR ASSEMBLY PROCEDURE

ISSUE:	1					
DATE:	JUNE 96					

Written by: R.T.S. COUPE

Checked by: P.A. BLYTHE D. FORD

Approved by: P.A. BLYTHE R.V.JAMIESON

Authorised by: I.M. GIBBON

MATRA MARCONI SPACE UK LIMITED
BRISTOL

SFM MODEL	
AIS NUMBER	

PROCEDURE	COMPLETED
SIGNATURE	DATE

DISTRIBUTION:
R.T.S. COUPE
P.A. BLYTHE
P.R. BEVAN
D. FORD
R.V. JAMIESON

CONFIGURATION DATA CONTROL
MATRA MARCONI SPACE
(BRISTOL)
DATE 14-6-96
CHRONO. No. 2945

© MMS SPACE SYSTEMS LIMITED 1996

Matra Marconi Space UK Limited owns the copyright of this document which is supplied in confidence and which shall not be used for any purpose other than that for which it is supplied and shall not in whole or in part be reproduced, copied or communicated to any person without written permission from the owner.

Any person other than the authorised holder obtaining possession of this document by finding or otherwise, should send it, together with his name and address, in a sealed envelope.

Configuration Control Dept.,
Matra Marconi Space UK Limited,
FPC 311
PO Box 16, Filton,
BRISTOL,
BS12 7YB

Letter postage need not be prepaid. Other postage will be refunded.

PAGE ISSUE RECORD

Issue 1 of the document comprises the following pages at the issues shown:

This document has been Word Processed. PO-PR-MMB-GM-0025

Document	Page	Issue	Document	Page	Issue	Document	Page	Issue
	All	1						

DOCUMENT CHANGE LOG

Issue	Change No.	ECP No.	ECN No.	Revised Date	Affected Pages	Relevant Information
1	–	–	–	June 96	All	Initial Issue

CONTENTS

1.0 MOTOR ASSEMBLY

PRIME MOTOR 1 SERIAL Nº 99L31687
RED MOTOR 2 SERIAL Nº 99L31688

		QUAL STAMP	
1.0	MOTOR ASSEMBLY – GM15250		
1.1	Inspect motor stator magnet assemblies under a microscope for chips in magnets and remove any debris or particles attracted to magnets with tape.		21/12/99
1.2	Fit bearing – Item 17, spacer – Item 4, and motor rotor to motor shaft – item 3. Wrap 0.005" thick plastic shim around motor rotor.		
	Assemble shaft assembly into housing (Item 001) assembly (leave plastic shim in position).		
1.3	Fit housing – Item 7 and spacer – item 5.		
	Refer to note 1.		
	Measure dimension from housing interface to the end spacer, record dimension 'Y'. Measure dimension from housing interface to motor stator abutment face and record dimensions 'X'.		
	Calculate finished length of spacer required to satisfy the 3.05/2.79 mm requirement.		REQUIRED LENGTH OF SPACER 13.2mm.
	Refer to Figure 1-1.		

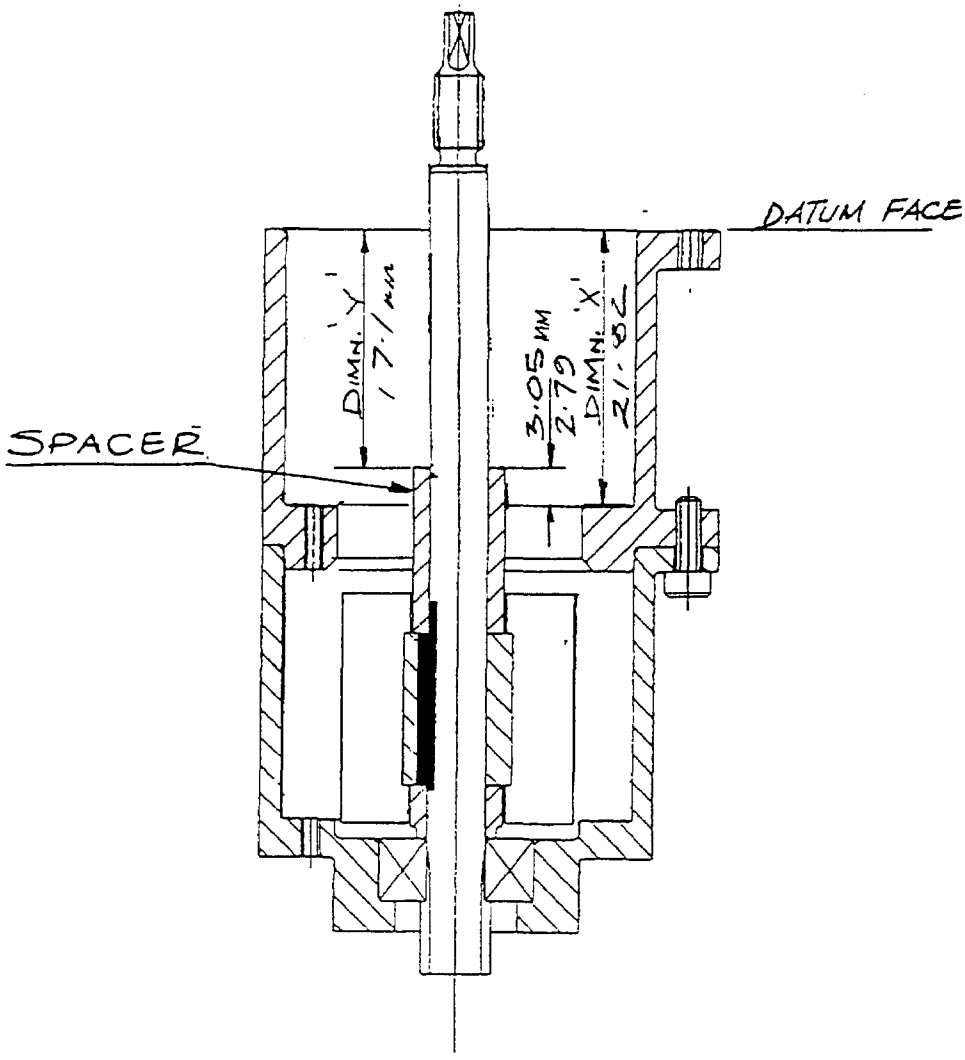

FIGURE 1-1

1.4 Machine spacer to length, verify by inspection.

1.5 Remove shaft assembly and bearing.

1.6 Apply antimigration film to the surfaces of the following components where shown thus xxxx

Motor housing – Item 1
Motor shaft – Item 3

Refer to Figure 1-2.

QUAL STAMP

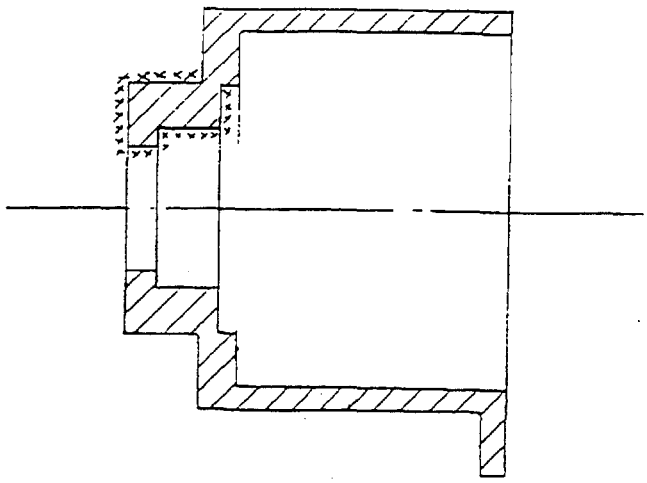

MOTOR HOUSING - ITEM 1

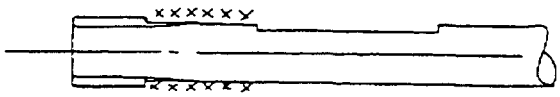

MOTOR SHAFT - ITEM 3

FIGURE 1-2 : APPLICATION OF ANTIMIGRATION FILM

		QUAL STAMP	
1.7	SHAFT ASSEMBLY • Assemble bearing, spacer and motor rotor to shaft. Orientate rotor keyway to line up with flat on shaft. • Inject adhesive into cavity until full. Refer to Note 7. (Caution : ensure no adhesive comes into contact with bearings). • Remove any excess adhesive. • Fit machined spacer and second motor align keyway with flat on shaft and inject adhesive as before. • Remove any excess adhesive. • Fit spacer, bearing, spacer and nut. Torque tighten nut to 0.4Nm and lock. • Allow assembly to cure.	S	22/12/99. MR N° 5260
1.8	Fit motor stator in housing – Item 1. Torque tighten fasteners to 0.06 Nm.	S	22/12/99.
1.9	Fit brush ring assembly to stator and lock. Torque tighten fasteners to 0.06 Nm and lock. Route cables through slots in housing. Fit Kynar sleeve to cables to protect insulation local to slots.	S	22/12/99.
1.10	Fit second motor stator in housing – item 7.	S	22/12/99.
1.11	Line stator bore with 0.005" plastic shim to protect magnets during assembly.	S	4/1/00
1.12	Carefully tape back commutator brushes.	S	4/1/00.
1.13	Slide shaft assembly in to engage bearing in housing and remove plastic shim and tape from brushes. Verify brushes are running on the commutation track.		
1.14	Fix shim (0.005" thick plastic) around second rotor.		

		QUAL STAMP	
1.15	Fit housing assembly – Item 7 in position and secure with screws.	S	4/1/00
1.16	Fit brush ring assembly to stator with care!		
	Ease back cantilever springs.		
	Torque tighten fasteners to 0.06 Nm and lock.	S	4/1/00
	Route cables through slots in housing.		
	Fit Kynar sleeve to cables to protect insulation local to housing slots. TBD.		TO BE FITTED.
1.17	• Bearing preload spring – Item 19, when installed is required to be compressed to half its free length. • Introduce packing into end cap – item 2. Trial fit end cap over bearing. Determine gap between end cap and motor housing flange. • Remove sufficient packing to leave space for half free length of preload spring, when the flanges are in contact. • Refer to Figure 1-3.	S	4/1/00
1.18	Fit bearing end cap.	S	4/1/00
	Torque tighten fasteners and lock.		FILLET LOCKING TO BE DONE AFTER TESTING.
		S	FILLET LOCKING COMPLETE 14/1/00 MIX No 5262.

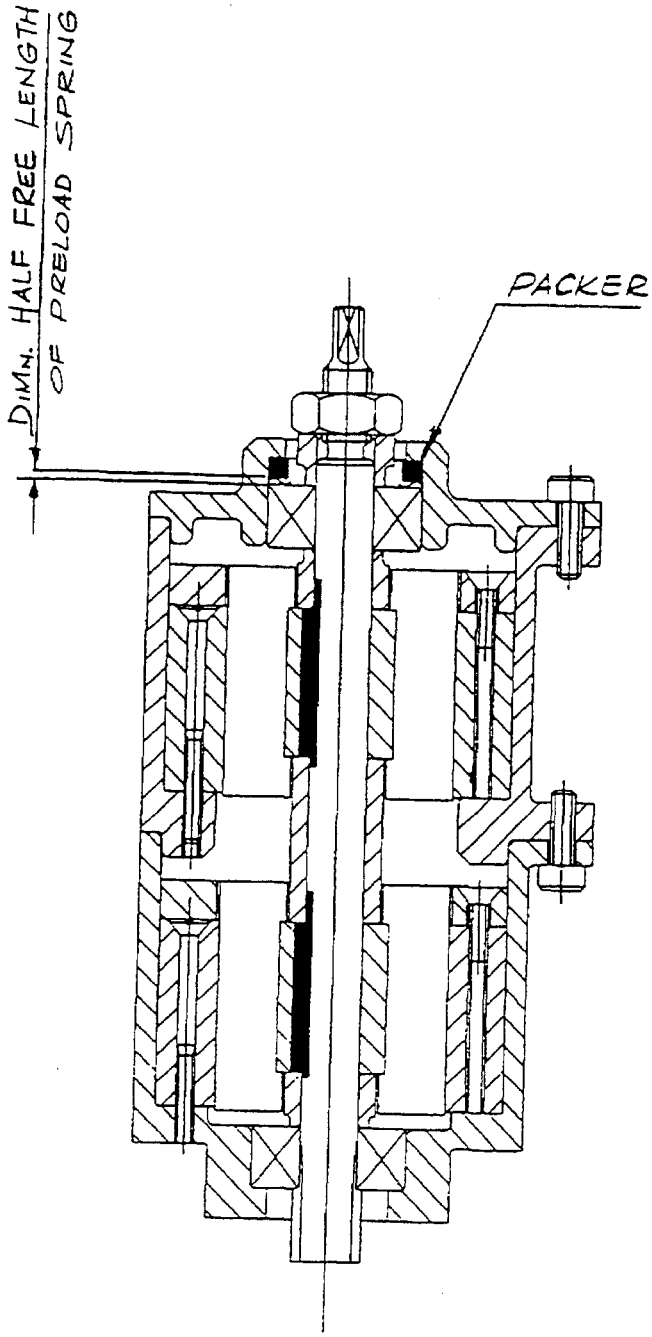

FIGURE 1-3 : MOTOR ASSEMBLY

1.19	Test assembly in accordance with PO-DIS-MMB-GM-0030 - Burn-in test.	QUAL STAMP

R. COUPE.

MATRA MARCONI SPACE

Design Instruction Sheet

Project: **GOMOS**	Number: **PO-DIS-MMB-GM-0030** Issue: **1** Sheet 1 of 9 Sht(s)

Title:

MOTOR ASSEMBLY GM1S250 BURN IN TEST

Equipment affected : Serial Number : Location :	QUALIFICATION & FLIGHT BUILDS BR07836
BOM affected :	NONE
Inspection Requirements : On completion return to :	PLACE A SIGNED COPY OF THIS DIS IN THE LOG BOOK

The object of the task described in this Design Instruction Sheet is to burn in the offload motor assemblies demonstrating acceptable winding characteristics and bedding in motor brushes. Both the prime and redundant motors of the assembly will be tested.

5-1-00 Start of test.

ALL MOTOR ASSEMBLIES (GM1S250) TO BE ASSEMBLED INTO THE SFA (QM & FM) MUST UNDERGO THIS BURN-IN PROCEDURE

	Originator	Design	Production	P.A.
Signed :				
Name :	M H Haywood	P A Blythe	D W Ford	R V Jamieson
Date :				
Action completed signature				

Distribution:

P R Bevan
P A Blythe
D W Ford
R V Jamieson

Prime Motor 1 Serial No 99L31687
Red Motor 2 Serial No 99L31688

1 Pre-test	5/1/00
1. Mount the motor assembly in a clamp securely such that the shaft is free to rotate and the cables for the motor windings are easily accessible.	
2. Measure the winding resistance of the prime and redundant motor windings at each of four shaft positions as outlined in Table 1. The winding resistance should be approximately 22.7Ω.±12% (i.e. 19.9Ω to 25.5Ω.)	Winding 1 20.7Ω Winding 2 21.0Ω see. HRNCR00002 HMS (Task 7)
3. Measure the isolation between the shaft of the motor assembly and the prime and redundant windings of the motor. The resistance should be greater than 100MΩ. Record the results in Table 2.	
4. Measure the torque required to rotate the shaft of the motor assembly and record the results in Table 3.	
5. Set up the motor assembly and auxiliary equipment as shown in Figure 1.	

Design Instruction Sheet (Continued)

Project: GOMOS	Number: PO-DIS-MMB-GM-0030 Issue: 1 Sheet 3 of 9 Sht(s)

2 Motor Test

1. Apply the 14.5V supply to the prime motor winding. The current drawn by the motor should not exceed 0.4A (dropping to approximately 0.3A as the motor warms up during operation).

Inform design if motor current exceeds the maximum permissible.
Set current limit to 0.4A

2. Measure the speed of rotation of the shaft. The speed of rotation should be approximately 1000rpm. Record the results in Table 6.

Refer to NCR HRNCR00002 MMS.
RTSC 20-1-00

3. Every 2 minutes remove the power to the motor then measure the increase in resistance in the prime and redundant windings. Rebuild the set up of Figure 1 and reapply power to the primary motor. Record the results in Table 4. The motor is to run for 15 minutes in total.

(If the winding resistance increases by more than 40% of its starting value the test is to be aborted and design department informed.)

4. Upon completion of the 15 minute cycle remove the power and reverse the polarity of the power supply so that the motor will turn in the opposite direction.

5. Repeat steps 1 to 4 filling in Tables 4 and 6 as before.

6. Reconfigure the equipment arrangement shown in Figure 1 such that the redundant motor is powered and the prime motor is short circuited.

7. Apply the 14.5V supply to the redundant motor winding. The current drawn by the motor should not exceed 0.4A (dropping to approximately 0.3A as the motor warms up during operation).

8. Measure the speed of rotation of the shaft. The speed of rotation should be approximately 1000rpm. Record the results in Table 6.

9. Every 2 minutes remove the power to the motor then measure the increase in resistance in the prime and redundant windings. Record the results in Table 5. Rebuild the set up and reapply power to the redundant motor. The motor is to run for 15 minutes in total.

minutes in total.	

Design Instruction Sheet (Continued)

Project: **GOMOS**	Number: **PO-DIS-MMB-GM-0030** Issue: **1** Sheet 4 of 9 Sht(s)

(If the winding resistance increases by more than 40% of its starting value the test is to be aborted and inform the design department).

10. Upon completion of the 15 minute cycle remove the power and reverse the polarity of the power supply so that the motor will turn in the opposite direction.

11. Repeat steps 7 to 10 filling in Tables 5 and 6 as before.

12. Allow the motor to cool down.

3 Post-Test

1. Measure the winding resistance of the prime and redundant motor windings at each of four shaft positions as outlined in Table 7.

   The results should reflect initial measurements taken during the Pre-test.

2. Measure the isolation between the shaft of the motor and the prime and redundant windings of the motor. The resistance should be greater than 100MΩ. Record the results in Table 8.

3. Measure the torque required to rotate the shaft of the motor and record the results in Table 9.

4. Strip the motor down sufficiently to perform items 5 and 6 for prime and redundant motors.

5. Inspect the brushes looking for any signs of uneven or excessive wear or damage.

   Design to be present during this operation.

6. Vacuum out any dust debris from the motor housings and rotors.

7. Rebuild the motor to GM1S250.

FIGURE 1

Design Instruction Sheet (Continued)

Project: GOMOS	Number: PO-DIS-MMB-GM-0030 Issue: 1 Sheet 7 of 9 Sht(s)

PRE-TEST RESULTS

WINDING RESISTANCE		
Position	Prime Winding Resistance	Redundant Winding Resistance
0°	20.5 Ω	20.7 Ω
90°	20.7 Ω	20.6 Ω
180°	20.8 Ω	21.4 Ω
270°	20.7 Ω	21.0 Ω

TABLE 1

ISOLATION	
Prime Winding to Motor Shaft	> 100 MΩ
Redundant Winding to Motor Shaft	> 100 MΩ

TABLE 2

TORQUE	
Motor Shaft Clockwise Rotation	5 mNm
Motor Shaft Anti-Clockwise Rotation	5 mNm

TABLE 3

TEST RESULTS

WINDING RESISTANCE								
	Primary Windings				Redundant Windings			
Time (mins)	Clockwise		Anticlockwise		Clockwise		Anticlockwise	
	Ω	mA	Ω	mA	Ω	mA	Ω	mA
2	23.8	335	23.4	305	25.8	274	23.0	253
4	22.7	331	23.7	305	23.0	268	23.6	254
6	23.3	329	23.8	303	21.9	259	23.8	253
8	23.9	319	23.8	302	24.3	257	23.9	251
10	24.8	316	23.9	301	24.9	254	24.4	249
12	24.7	314	24.0	301	25.0	252	24.9	248
14	24.2	311	24.1	301	24.0	251	23.8	249
15	24.2	311	24.1	300	24.0	251	22.7	249

Rotation caused by PRIMARY motor powered @ 14.5V

TABLE 4

WINDING RESISTANCE								
	Primary Windings				Redundant Windings			
Time (mins)	Clockwise		Anticlockwise		Clockwise		Anticlockwise	
	Ω	mA	Ω	mA	Ω	mA	Ω	mA
2	22.4	261	24.2	247	23.6	370	24.5	342
4	22.9	259	24.1	245	23.2	364	24.9	341
6	23.0	255	24.4	244	23.6	359	24.6	339
8	23.8	252	24.4	244	24.2	356	25.2	339
10	23.8	250	24.5	243	24.1	353	22.9	338
12	23.9	248	24.4	244	24.9	351	25.0	338
14	23.9	247	24.4	243	24.6	349	25.0	337
15	24.2	247	24.7	243	22.7	349	24.8	338

Rotation caused by REDUNDANT motor powered @ 14.5V

TABLE 5

POST-TEST RESULTS

WINDING RESISTANCE		
Position	Prime Winding Resistance	Redundant Winding Resistance
0°	20.7 Ω	20.8 Ω
90°	20.9 Ω	19.6 Ω
180°	20.7 Ω	20.8 Ω
270°	20.6 Ω	20.8 Ω

TABLE 7

ISOLATION	
Prime Winding to Motor Shaft	> 100 MΩ
Redundant Winding to Motor Shaft	> 100 MΩ

TABLE 8

TORQUE	
Motor Shaft Clockwise Rotation	5 mNm
Motor Shaft Anti-Clockwise Rotation	5 mNm

TABLE 9

Additional tests to verify motor assembly

1. Brush Commutation check.

- Connect the power supply to the prime motor winding and set voltage to 14.5V and current limit to 0.4 A.
- Run motor and monitor current.
- Gradually reduce voltage until motor stops. Record voltage.
- Set voltage at 0V and gradually increase voltage until motor starts to rotate. Record starting voltage and current that initiates rotation.
- Perform test 3 times on prime and redundant motors.
- Record results in Table

Prime motor	**Motor stops rotating**		**Motor starts rotating**	
	Voltage	*Current (mA)*	*Voltage*	*Current (mA)*
Test 1	2.5	93	2.9	67
Test 2	2.6	97	2.8	66
Test 3	2.6	-	2.8	66
Redundant motor				
Test 1	2.55	62	2.7	64
Test 2	2.56	62	2.61	64
Test 3	2.54	62	2.68	64

Results table

2. No Load speed check.

- Apply 14.5V to prime motor and monitor output voltage v time on a storage oscilloscope from the redundant motor.
- Repeat test with redundant motor driven and prime motor output voltage monitored.

The Oscilloscope traces show the voltage outputs levels of both motors to be running smoothly with the prime motor at 12V and the redundant motor at 11V.

PRIME MOTOR TRACE (RED. DRIVEN)

12V AV.

NO DROPOUT.

0·2V/DIV

1mS/DIV

0V

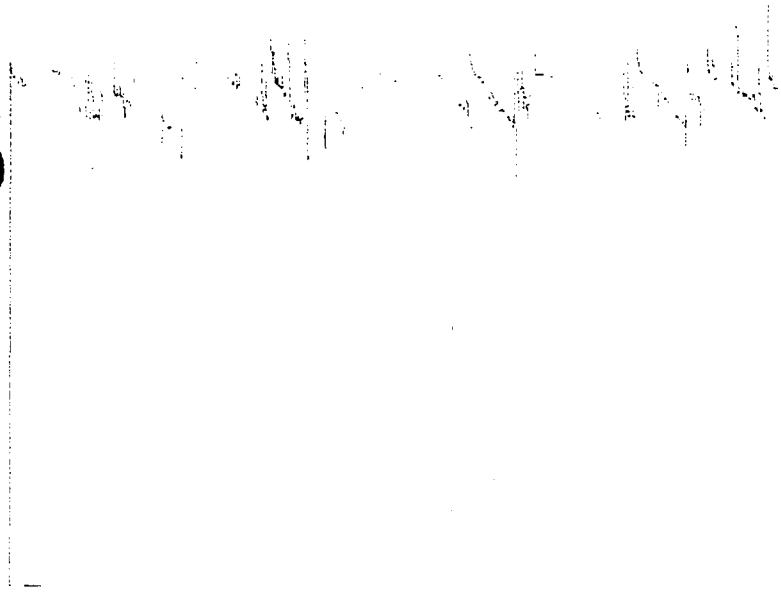

REDUNDANT MOTOR TRACE (PRIME DRIVEN)

11V AV.

NO DROPOUT

0·2V/DIV

1mS/DIV.

0V

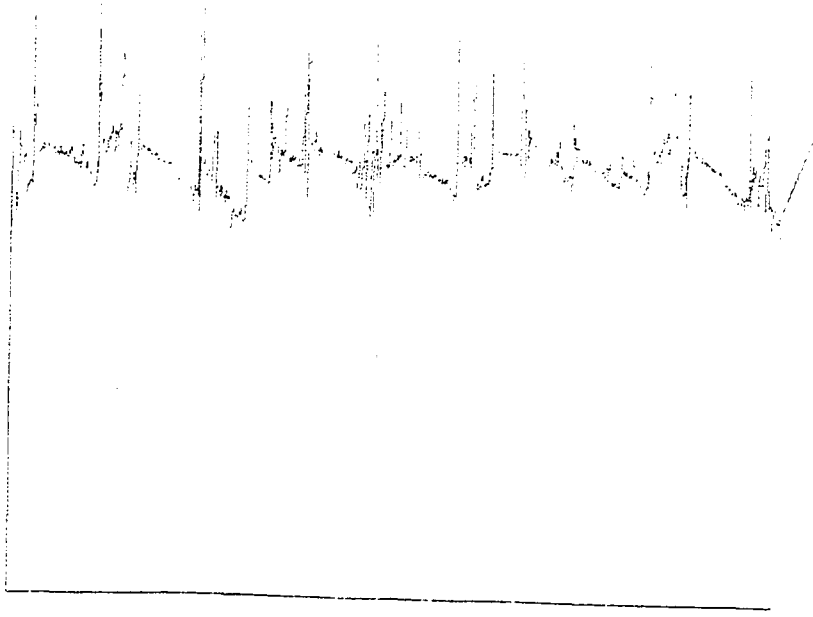

SECTION 4

Work Instructions and Routing Card Revision 1
HR2L040 Works Order No.MFG0170716

MATRA MARCONI SPACE	Project & Charge No: HIRDLS	RE Approval Stamp:

BOM No:	ECL No	Instruction Issue:	Routing revision level	Serial No:
HR2L040	03	1	1	FM

Works Order No:	Description	Title:
MFG0170716	Space View Albedo Assembly	Space View Albedo Assembly

ASSEMBLY INTEGRATION & TEST WORK INSTRUCTIONS

ISSUES OF CURRENT RELEVANT DOCUMENTATION AT ISSUE OF WORK INSTRUCTIONS

PRODUCT SPECIFIC DOCUMENTATION

DRAWING NUMBER	TITLE	ISS
HR2L004	Motor Assembly	001
HR2L040	SVA Assembly	001

PROJECT SPECIFIC INSTRUCTIONS

DRAWING NUMBER	TITLE	ISS

UNIT HAZARDS	PERSONNEL HAZARDS

A	B	C	D	E	F	G	H	I	J	K	L	M	N	O	P	Q	R	S	T	U	V	W	X	Y	Z

MATRA MARCONI SPACE	Project & Charge No: HIRDLS			RE Approval Stamp:
BOM No: HR2L040	ECL No 03	Instruction Issue: 1	Routing revision level 1	Serial No: FM
Works Order No: MFG0170716	Description Space View Albedo Assembly			Title: Space View Albedo Assembly

ASSEMBLY INSTRUCTION

WARNING

ENSURE THAT DUST COVERS ARE FITTED AT ALL TIMES TO FLIGHT HARDWARE.

GLOVES AND ANTISTATIC WRISTSTRAPS ARE TO BE WORN AT ALL TIMES WHILST IN THE CLEANROOM.

Operation Number	Operation Code	Work Centre	Discipline	Operation Complete	Witness / Inspect
10	Kit	230STORE		MMS 28 UK	OK

Operation Details

Kit marshall will be performed by stores prior to entering the clean room.

Operation Number	Operation Code	Work Centre	Discipline	Operation Complete	Witness / Inspect
20	Kan	43AITCR	Mech	MMS 28 UK	

Operation Details

Place Kit in Kanban store and create data pack.

Operation Number	Operation Code	Work Centre	Discipline	Operation Complete	Witness / Inspect
30	Vinsp	43AITCR	Mech	MMS 28 UK	

Operation Details

A visual inspection of the kit shall be performed prior to integration.

MATRA MARCONI SPACE	Project & Charge No: HIRDLS	RE Approval Stamp:

BOM No:	ECL No	Instruction Issue:	Routing revision level	Serial No:
HR2L040	03	1	1	FM

Works Order No:	Description	Title:
MFG0170716	Space View Albedo Assembly	Space View Albedo Assembly

Operation Number	Operation Code	Work Centre	Discipline	Operation Complete	Witness / Inspect
35	Clean	43AITCR	Mech	MMS 281 UK	OK

Operation Details

Prior to assembly of SVA all parts to be cleaned IAW DRW Note '1'. All parts to be weighed and recorded incident and observation record.

Operation Number	Operation Code	Work Centre	Discipline	Operation Complete	Witness / Inspect
36	Vinsp	43AITCR	Mech	MMS 281 UK	OK

Operation Details

A visual inspection of the kit shall be performed prior to integration.

Operation Number	Operation Code	Work Centre	Discipline	Operation Complete	Witness / Inspect
40	Assy	43AITCR	Mech	MMS 281 UK	

Operation Details

Bond tubular rubber seal (item 070) to mounting flange (item 010) I.A.W DRW note 5.

Operation Number	Operation Code	Work Centre	Discipline	Operation Complete	Witness / Inspect
50	Vinsp	43AITCR	Mech	MMS 281 UK	

Operation Details

Inspect

MATRA MARCONI SPACE	Project & Charge No: HIRDLS	RE Approval Stamp:

BOM No:	ECL No	Instruction Issue:	Routing revision level	Serial No:
HR2L040	03	1	1	FM

Works Order No:	Description	Title:
MFG0170716	Space View Albedo Assembly	Space View Albedo Assembly

Operation Number	Operation Code	Work Centre	Discipline	Operation Complete	Witness / Inspect
60	Assy	43AITCR	Mech	MMS 281 UK	OK

Operation Details

Fit special bush (item 020) to (Item 002) as shown on section BB of DRW.

Operation Number	Operation Code	Work Centre	Discipline	Operation Complete	Witness / Inspect
70	Assy	43AITCR	Mech	MMS 281 UK	OK

Operation Details

Fit adapter plate, (Item 032) to gearhead (Item067) and secure with 4-40 UNC screws supplied with gearhead. Torque to 0.52 Nm and lock heads of bolts IAW Note 3.

Operation Number	Operation Code	Work Centre	Discipline	Operation Complete	Witness / Inspect
80	Vinsp	43AITCR	Mech	MMS 281 UK	OK

Operation Details

Inspect

Operation Number	Operation Code	Work Centre	Discipline	Operation Complete	Witness / Inspect
90	Assy	43AITCR	Mech	MMS 281 UK	OK

Operation Details

Fit motor assembly (Item 001) to gearhead adaptor plate, using fixings (Item 049). Torque fixings to 0.20 Nm, and lock heads of screws IAW Note 3.

Operation Number	Operation Code	Work Centre	Discipline	Operation Complete	Witness / Inspect
100	Assy	43AITCR	Mech	MMS 281 UK	OK

MATRA MARCONI SPACE	Project & Charge No: HIRDLS	RE Approval Stamp:

BOM No:	ECL No	Instruction Issue:	Routing revision level	Serial No:
HR2L040	03	1	1	FM

Works Order No:	Description	Title:
MFG0170716	Space View Albedo Assembly	Space View Albedo Assembly

Operation Details

Run bronze nut (Item 68) on to the gearhead output shaft screw. Run nut along length of thread to remove any surface impurities and verify smooth running of nut to thread interface.

Operation Number	Operation Code	Work Centre	Discipline	Operation Complete	Witness / Inspect
110	Vinsp	43AITCR	Mech	MMS 281 UK	OK

Operation Details

Inspect

Operation Number	Operation Code	Work Centre	Discipline	Operation Complete	Witness / Inspect
120	Lock	43AITCR	Mech	MMS 281 UK	OK

Operation Details

Bond Ty-rap bases (Item076) 7 off to underside of (Item 002) IAW Note 7. Hold Ty-rap bases in position with Kapton tape until mix has hardened. Mix is to be recorded in Mix log and sample tested for hardness.

Operation Number	Operation Code	Work Centre	Discipline	Operation Complete	Witness / Inspect
130	Vinsp	43AITCR	Mech	MMS 281 UK	OK

Operation Details

Inspect

REFER TO WORKS ORDER Nº MFG0182080 S/.

Operation Number	Operation Code	Work Centre	Discipline	Operation Complete	Witness / Inspect
140	Assy	43AITCR	Mech	MMS 203 UK	OK

Operation Details

Screw bearing (Item 069) into locking sleeve (Item 015).

MATRA MARCONI SPACE	Project & Charge No: HIRDLS			RE Approval Stamp:
BOM No: HR2L040	ECL No 03	Instruction Issue: 1	Routing revision level 1	Serial No: FM
Works Order No: MFG0170716	Description Space View Albedo Assembly			Title: Space View Albedo Assembly

MIX RECORD

OP No.	Mix Number	Mix Type	Batch Number	Used Against	User's Stamp
70	5210	EPIKOTE	PM 16156/1/F		MMS 281 UK
90	-"-	VERSAMID	PM 24712/1/F		MMS 281 UK
120	-"-	SILICA	GZ 363676		MMS 281 UK
40	001	CV-2566	ST23193/1		MMS 203 UK
180	5213	828	PM 16156/1/F		MMS 203 UK
200	"	140	PM 24712/1/F		MMS 203 UK
230	"	SILICA	GZ 363676		
205	5216	EPIKOTE	AS ABOVE	DISBOND ACCURED NEW MIX USED	MMS 281 UK
		VERSAMID		ON OP 205	
					MMS 281 UK
205	5215	EPIKOTE	PM 16156/1/F		MMS 281 UK
		VERSAMID	PM 24712/1/F		MMS 281 UK
		SILICA	GZ 363676		MMS 281 UK
205	5216	EPIKOTE	—"—		MMS 281 UK
		VERSAMID	—"—		MMS 281 UK
		SILICA	—"—		MMS 281 UK
270	5217	—"—	—"—		MMS 281 UK
280	—"—	—"—	—"—		MMS 281 UK
			—"—		
320	5219	—"—	—"—		MMS 281 UK
330	—"—	—"—	—"—		

Part Number	ECL	RRL	Project / WBS
HR2L040	03	1	17143/733002

Item Description
SPACE VIEW ALBEDO ASSEMBLY

Work Order Number	Quantity	Release Date	Due Date
MFG0170716	1	03/06/1999	03/09/1999

Start Finish

Op.No.	Work Centre	Mach.No.	Description	Stamp
10	230STORE	NONE	KIT MARSHALL	MMS 203 UK
20	43AITCR	MECH	ROUTE TO KANBAN STORE.	MMS 203 UK
30	43AITCR	MECH	VISUAL INSPECT	MMS 203 UK
35	43AITCR	MECH	CLEAN IN ACCORDANCE WITH RELEVANT SPECIFICATION.	MMS 203 UK
36	43AITCR	MECH	VISUAL INSPECT	MMS 203 UK
40	43AITCR	MECH	ASSEMBLE IN ACCORDANCE WITH RELEVANT WORK INSTRUC TION / DRAWING	MMS 203 UK
50	43AITCR	MECH	VISUAL INSPECT	MMS 203 UK
60	43AITCR	MECH	ASSEMBLE IN ACCORDANCE WITH RELEVANT WORK INSTRUC TION / DRAWING	MMS 203 UK

Part Number	ECL	RRL	Project / WBS
HR2L040	03	1	17143/733002

Item Description
SPACE VIEW ALBEDO ASSEMBLY

Work Order Number	Quantity	Release Date	Due Date
MFG0170716	1	03/06/1999	03/09/1999

Start Finish

Op.No.	Work Centre	Mach.No.	Description	Stamp
70	43AITCR	MECH	ASSEMBLE IN ACCORDANCE WITH RELEVANT WORK INSTRUCTION / DRAWING	MMS 203 UK
80	43AITCR	MECH	VISUAL INSPECT	MMS 203 UK
90	43AITCR	MECH	ASSEMBLE IN ACCORDANCE WITH RELEVANT WORK INSTRUCTION / DRAWING	
100	43AITCR	MECH	ASSEMBLE IN ACCORDANCE WITH RELEVANT WORK INSTRUCTION / DRAWING	MMS 203 UK
110	43AITCR	MECH	VISUAL INSPECT	MMS 203 UK
120	43AITCR	MECH	FILLET LOCK/BOND IN ACCORDANCE WITH DRAWINGS/SPECIFICATIONS	MMS 203 UK
130	43AITCR	MECH	VISUAL INSPECT	MMS 203 UK
140	43AITCR	MECH	ASSEMBLE IN ACCORDANCE WITH RELEVANT WORK INSTRUCTION / DRAWING	MMS 203 UK
			REFER TO WORKS ORDER Nº MFG0182080	

SECTION 4

Work Instructions and Routing Card Revision 2
HR2L040 Works Order No.MFG0182080

MATRA MARCONI SPACE	Project & Charge No: HIRDLS			RE Approval Stamp:
BOM No: HR2L040	ECL No 04	Instruction Issue: 2	Routing revision level 2	Serial No: FM
Works Order No: MFG0182080	Description Space View Albedo Assembly			Title: Space View Albedo Assembly

ASSEMBLY INTEGRATION & TEST WORK INSTRUCTIONS

ISSUES OF CURRENT RELEVANT DOCUMENTATION AT ISSUE OF WORK INSTRUCTIONS

PRODUCT SPECIFIC DOCUMENTATION

DRAWING NUMBER	TITLE	ISS
HR2L004	Motor Assembly	001
HR2L040	SVA Assembly	002

PROJECT SPECIFIC INSTRUCTIONS

DRAWING NUMBER	TITLE	ISS
DW – MMS - 389	SVA ASSEMBLY PROCEDURE	2

UNIT HAZARDS	PERSONNEL HAZARDS

A	B	C	D	E	F	G	H	I	J	K	L	M	N	O	P	Q	R	S	T	U	V	W	X	Y	Z

MATRA MARCONI SPACE	Project & Charge No: HIRDLS	RE Approval Stamp:

BOM No:	ECL No	Instruction Issue:	Routing revision level	Serial No:
HR2L040	04	2	2	FM

Works Order No:	Description	Title:
MFG0182080	Space View Albedo Assembly	Space View Albedo Assembly

ASSEMBLY INSTRUCTION

WARNING

ENSURE THAT DUST COVERS ARE FITTED AT ALL TIMES TO FLIGHT HARDWARE.

GLOVES AND ANTISTATIC WRISTSTRAPS ARE TO BE WORN AT ALL TIMES WHILST IN THE CLEANROOM.

Operation Number	Operation Code	Work Centre	Discipline	Operation Complete	Witness / Inspect
135	Recvd	43AITCR	Mech	MMS 203 UK	

Operation Details

Received from HR2L040 ECLO3 MFG0170716.

Operation Number	Operation Code	Work Centre	Discipline	Operation Complete	Witness / Inspect
140	Assy	43AITCR	Mech	MMS 203 UK	

Operation Details

Screw bearing (Item 069) into locking sleeve (Item 015).

Operation Number	Operation Code	Work Centre	Discipline	Operation Complete	Witness / Inspect
150	Vinsp	43AITCR	Mech	MMS 203 UK	

Operation Details

Tape inner surface of albedo shield (Item 026), with (Item 082) Kapton tape, IAW Note 9.

Operation Number	Operation Code	Work Centre	Discipline	Operation Complete	Witness / Inspect
160	Vinsp	43AITCR	Mech	MMS 203 UK	

Operation Details

Inspect

MATRA MARCONI SPACE	Project & Charge No: HIRDLS	RE Approval Stamp:

BOM No:	ECL No	Instruction Issue:	Routing revision level	Serial No:
HR2L040	04	2	2	FM

Works Order No:	Description	Title:
MFG0182080	Space View Albedo Assembly	Space View Albedo Assembly

Operation Number	Operation Code	Work Centre	Discipline	Operation Complete	Witness / Inspect
170	Assy	43AITCR	Mech	MMS 203 UK	

Operation Details

Fit spigot (Item 016) to housing (Item 017).

Operation Number	Operation Code	Work Centre	Discipline	Operation Complete	Witness / Inspect
180	Assy	43AITCR	Mech	MMS 203 UK	

Operation Details

Fit bronze nut (Item 068) to (Item 003) and fit housing assembly (Item 017) over end of nut and hold with fixings (Item 052). Torque screws to 05Nm and lock IAW Note 3.

Operation Number	Operation Code	Work Centre	Discipline	Operation Complete	Witness / Inspect
190	Vinsp	43AITCR	Mech	MMS 203 UK	

Operation Details

Inspect

Operation Number	Operation Code	Work Centre	Discipline	Operation Complete	Witness / Inspect
200	Assy	43AITCR	Mech	MMS 203 UK	

Operation Details

Fit brackets (Item 006) and (Item 007) to cover. Torque fixings (Item 054) to 0.9 Nm and lock heads IAW Note 3.

MATRA MARCONI SPACE	Project & Charge No: HIRDLS	RE Approval Stamp:

BOM No:	ECL No	Instruction Issue:	Routing revision level	Serial No:
HR2L040	04	2	2	FM

Works Order No:	Description	Title:
MFG0182080	Space View Albedo Assembly	Space View Albedo Assembly

Operation Number	Operation Code	Work Centre	Discipline	Operation Complete	Witness / Inspect
201	Assy	43AITCR	Mech	MMS 203 UK	

Operation Details

Bond Spring Support Housing Item 022 to cover Item 003 using a centralising tool to align in orientation shown on scrap view with reference to Note 21 Dwg HR2L040 SHT 02.

Operation Number	Operation Code	Work Centre	Discipline	Operation Complete	Witness / Inspect
202	Vinsp	43AITCR	Mech	MMS 203 UK	

Operation Details

Inspect.

Operation Number	Operation Code	Work Centre	Discipline	Operation Complete	Witness / Inspect
203	Assy	43AITCR	Mech	MMS 203 UK	

Operation Details

Fit spring Item 020 and bond housing Item 021 to Cover Item 003 in orientation as shown in scrap view with reference to Note 22 Dwg HR2L040 SHT 02.

Operation Number	Operation Code	Work Centre	Discipline	Operation Complete	Witness / Inspect
204	Vinsp	43AITCR	Mech	MMS 203 UK	

Operation Details

Inspect.

MATRA MARCONI SPACE	Project & Charge No: HIRDLS	RE Approval Stamp:

BOM No:	ECL No	Instruction Issue:	Routing revision level	Serial No:
HR2L040	04	2	2	FM

Works Order No:	Description	Title:
MFG0182080	Space View Albedo Assembly	Space View Albedo Assembly

Operation Number	Operation Code	Work Centre	Discipline	Operation Complete	Witness / Inspect
210	Assy	43AITCR	Mech	MMS 203 UK	

Operation Details

Fit flange and seal assembly (Item 010) to panel (Item 002) using (Item 058) 6 off, leave fixings loose.

Operation Number	Operation Code	Work Centre	Discipline	Operation Complete	Witness / Inspect
220	Vinsp	43AITCR	Mech	MMS 203 UK	

Operation Details

Inspect

Operation Number	Operation Code	Work Centre	Discipline	Operation Complete	Witness / Inspect
230	Assy	43AITCR	Mech	MMS 203 UK	

Operation Details

Fit motor gearhead assembly, secure fixings and torque to 2.0Nm.

Operation Number	Operation Code	Work Centre	Discipline	Operation Complete	Witness / Inspect
240	Vinsp	43AITCR	Mech	MMS 203 UK	

Operation Details

Inspect

Operation Number	Operation Code	Work Centre	Discipline	Operation Complete	Witness / Inspect
250	Assy	43AITCR	Mech	MMS 203 UK	

Operation Details

Engage cover assembly nut (Item 068) on the gearhead output shaft, rotate cover assembly and wind onto shaft. Fit pair of Nuts Item 061 to end of Gearshaft to provide a manual drive facility. An alternative is to drive the gearhead via a power supply I.A.W DW – MMS – 389 Section 3.3.

Turn the gearhead shaft to bring the cover assembly down until it is about to engage the flange seal assembly (Item 010). With the aid of 3 equally spaced 0.2mm thk shims, centralise the flange assembly to match the core centre of the cover assembly.

Operation Number	Operation Code	Work Centre	Discipline	Operation Complete	Witness / Inspect
260	Vinsp	43AITCR	Mech	MMS 203 UK	

Operation Details

Inspect

Operation Number	Operation Code	Work Centre	Discipline	Operation Complete	Witness / Inspect
270	Assy	43AITCR	Mech	MMS 203 UK	

Operation Details

Torque fixings to 2.2 Nm. Lock fixings IAW Note 3.

Operation Number	Operation Code	Work Centre	Discipline	Operation Complete	Witness / Inspect
280	Assy	43AITCR	Mech	MMS 203 UK	

Operation Details

Determine gap between underside of housing with (Item 017) and flange face of bush (Item 028). Select shim thickness to match above gap from shim set (Item 029). Verify that with the cover fully closed clearance between flange and cover at the cone interface is 0.2 / 0.3mm. Apply fillet bond to retain (Item 028)

MATRA MARCONI SPACE	Project & Charge No: HIRDLS	RE Approval Stamp:

BOM No:	ECL No	Instruction Issue:	Routing revision level	Serial No:
HR2L040	04	2	2	FM

Works Order No:	Description	Title:
MFG0182080	Space View Albedo Assembly	Space View Albedo Assembly

Operation Number	Operation Code	Work Centre	Discipline	Operation Complete	Witness / Inspect
290	Vinsp	43AITCR	Mech	MMS 203 UK	

Operation Details

Inspect

Operation Number	Operation Code	Work Centre	Discipline	Operation Complete	Witness / Inspect
300	Assy	43AITCR	Mech	MMS 203 UK	

Operation Details

Remove cover assembly and apply 0.2g of Braycote 601 grease in 5mm wide band to gearhead output shaft in the centre of the ACME screw thread. Apply anti-migration film to surface area shown in FIG 1. Refit cover assembly (Ref. Section 'BB' of DRG).

Operation Number	Operation Code	Work Centre	Discipline	Operation Complete	Witness / Inspect
305	Assy	43AITCR	Mech	MMS 203 UK	

Operation Details

Apply anti-migration film to surface areas in accordance with fig 1 Dw-mms-389.

Operation Number	Operation Code	Work Centre	Discipline	Operation Complete	Witness / Inspect
310	Vinsp	43AITCR	Mech	MMS 203 UK	

Operation Details

Inspect

MATRA MARCONI SPACE	Project & Charge No: HIRDLS	RE Approval Stamp:

BOM No:	ECL No	Instruction Issue:	Routing revision level	Serial No:
HR2L040	04	2	2	FM

Works Order No:	Description	Title:
MFG0182080	Space View Albedo Assembly	Space View Albedo Assembly

Operation Number	Operation Code	Work Centre	Discipline	Operation Complete	Witness / Inspect
320	Assy	43AITCR	Mech	MMS 203 UK	

Operation Details

Fit cover guide (Item 018) And secure using screws (Item 055), torque fixings to 0.5 Nm. Fillet lock IAW Note 3.

Operation Number	Operation Code	Work Centre	Discipline	Operation Complete	Witness / Inspect
330	Lock	43AITCR	Mech		

Operation Details

Fit locking sleeve assembly (Item 015) over wave washer (Item 059). Fit stop plate (Item 013) and clamp in position using nut (Item 061). Torque nut (Item 061) to 2.2 Nm. Fillet lock (Item 061) IAW Note 3. Fit drive interface (Item 011) and torque fixings to 0.5Nm. Fillet lock (Item 012) IAW Note 3.

Operation Number	Operation Code	Work Centre	Discipline	Operation Complete	Witness / Inspect
340	Vinsp	43AITCR	Mech		

Operation Details

Inspect

Operation Number	Operation Code	Work Centre	Discipline	Operation Complete	Witness / Inspect
345	Assy	43AITCR	Elec	MMS 203 UK	

Operation Details

Wire harness to connector as shown on sheet 3 of drawing, in accordance with notes 6,8,10,11 and 13. NOTE: Leave cables to resistor, item 33, over length at this stage. Hi-rel 12Ω Resistor mayn't be immediately available.

MATRA MARCONI SPACE	Project & Charge No: HIRDLS	RE Approval Stamp:

BOM No:	ECL No	Instruction Issue:	Routing revision level	Serial No:
HR2L040	04	2	2	FM

Works Order No:	Description	Title:
MFG0182080	Space View Albedo Assembly	Space View Albedo Assembly

Operation Number	Operation Code	Work Centre	Discipline	Operation Complete	Witness / Inspect
346	Vinsp	43AITCR	Elec	MMS 203 UK	

Operation Details

Inspect

REFER TO WORKS ORDER Nº AIT182080

Operation Number	Operation Code	Work Centre	Discipline	Operation Complete	Witness / Inspect
347	Assy	43AITCR	Mech		

Operation Details

Fit Spring Stop Item 023, torque I.A.W HR2L040 Note 2 and fillet lock I.A.W Note 3.

Operation Number	Operation Code	Work Centre	Discipline	Operation Complete	Witness / Inspect
350	Assy	43AITCR	Mech		

Operation Details

Insert a 0.2mm thick plastic shim between the face of (Item 017) and (Item 028). Close the door using manual operation drive until the shim is clamped in position. Set microswitch 'A' to operate in this position by adjusting stop screws (Item 008). Torque (Item 046) to the Req.'s of PS2039 Appendix 'A'. Fillet lock screw thread IAW Note 3.
Back off both stop screws on microswitch 'B'. Set door stop screw to just operate microswitch 'B', add a further half turn of the screw to achieve final setting and lock in position using nut (Item 046). Torque nut (Item 046)
Fillet lock (Item046) IAW Note 3.
Set fixed stop to be in contact above stop and locked in position.

Operation Number	Operation Code	Work Centre	Discipline	Operation Complete	Witness / Inspect
360	Vinsp	43AITCR	Mech		

Operation Details

Inspect

MMS Routing Card

Part Number	ECL	RRL	Project / WBS
HR2L040	04	2	17143/733002

Item Description
SPACE VIEW ALBEDO ASSEMBLY

Work Order Number	Quantity	Release Date	Due Date
MFG0182080	1	20/06/1999	03/09/1999

Start Finish

Op.No.	Work Centre	Mach.No.	Description	Stamp
140	43AITCR	MECH	ASSEMBLE IN ACCORDANCE WITH RELEVANT WORK INSTRUCTION / DRAWING	S
150	43AITCR	MECH	VISUAL INSPECT	S
160	43AITCR	MECH	VISUAL INSPECT	S
170	43AITCR	MECH	ASSEMBLE IN ACCORDANCE WITH RELEVANT WORK INSTRUCTION / DRAWING	S
180	43AITCR	MECH	ASSEMBLE IN ACCORDANCE WITH RELEVANT WORK INSTRUCTION / DRAWING	S
190	43AITCR	MECH	VISUAL INSPECT	S
200	43AITCR	MECH	ASSEMBLE IN ACCORDANCE WITH RELEVANT WORK INSTRUCTION / DRAWING	S
201	43AITCR	MECH	ASSEMBLE IN ACCORDANCE WITH RELEVANT WORK INSTRUCTION / DRAWING	S

Part Number	ECL	RRL	Project / WBS
HR2L040	04	2	17143/733002

Item Description
SPACE VIEW ALBEDO ASSEMBLY

Work Order Number	Quantity	Release Date	Due Date
MFG0182080	1	20/06/1999	03/09/1999

Start Finish

Op.No.	Work Centre	Mach.No.	Description	Stamp
202	43AITCR	MECH	VISUAL INSPECT	
203	43AITCR	MECH	ASSEMBLE IN ACCORDANCE WITH RELEVANT WORK INSTRUCTION / DRAWING	
204	43AITCR	MECH	VISUAL INSPECT	
210	43AITCR	MECH	ASSEMBLE IN ACCORDANCE WITH RELEVANT WORK INSTRUCTION / DRAWING	
220	43AITCR	MECH	VISUAL INSPECT	
230	43AITCR	MECH	ASSEMBLE IN ACCORDANCE WITH RELEVANT WORK INSTRUCTION / DRAWING	
240	43AITCR	MECH	VISUAL INSPECT	
250	43AITCR	MECH	ASSEMBLE IN ACCORDANCE WITH RELEVANT WORK INSTRUCTION / DRAWING	

Part Number	ECL	RRL	Project / WBS
HR2L040	04	2	17143/733002

Item Description
SPACE VIEW ALBEDO ASSEMBLY

Work Order Number	Quantity	Release Date	Due Date
MFG0182080	1	20/06/1999	03/09/1999

Start Finish

Op.No.	Work Centre	Mach.No.	Description	Stamp
260	43AITCR	MECH	VISUAL INSPECT	S
270	43AITCR	MECH	ASSEMBLE IN ACCORDANCE WITH RELEVANT WORK INSTRUCTION / DRAWING	S
280	43AITCR	MECH	ASSEMBLE IN ACCORDANCE WITH RELEVANT WORK INSTRUCTION / DRAWING	S
290	43AITCR	MECH	VISUAL INSPECT	S
300	43AITCR	MECH	ASSEMBLE IN ACCORDANCE WITH RELEVANT WORK INSTRUCTION / DRAWING	S
310	43AITCR	MECH	VISUAL INSPECT	S
320	43AITCR	MECH	ASSEMBLE IN ACCORDANCE WITH RELEVANT WORK INSTRUCTION / DRAWING	S
330	43AITCR	MECH	FILLET LOCK/BOND IN ACCORDANCE WITH DRAWINGS/SPECIFICATIONS	S

Part Number	ECL	RRL	Project / WBS
HR2L040	04	2	17143/733002

Item Description
SPACE VIEW ALBEDO ASSEMBLY

Work Order Number	Quantity	Release Date	Due Date
MFG0182080	1	20/06/1999	03/09/1999

Start Finish

Op.No.	Work Centre	Mach.No.	Description	Stamp
340	43AITCR	MECH	VISUAL INSPECT	S
345	43AITCR	MECH	ASSEMBLE IN ACCORDANCE WITH RELEVANT WORK INSTRUCTION / DRAWING	S
346	43AITCR	MECH	VISUAL INSPECT (MECH) IAW WORK INSTRUTIONS/PROCEDURE	S
347	43AITCR	MECH	ASSEMBLE IN ACCORDANCE WITH RELEVANT WORK INSTRUCTION / DRAWING REFER TO WORK ORDER N° AITC182080	S
350	43AITCR	MECH	ASSEMBLE IN ACCORDANCE WITH RELEVANT WORK INSTRUCTION / DRAWING	S
360	43AITCR	MECH	VISUAL INSPECT	S
370	43AITCR	MECH	ASSEMBLE IN ACCORDANCE WITH RELEVANT WORK INSTRUCTION / DRAWING	S
380	43AITCR	MECH	VISUAL INSPECT	S

SECTION 4

Work Instructions and Routing Card Revision 3
HR2L040 Works Order No.AIT0182080

MATRA MARCONI SPACE	Project & Charge No: HIRDLS			RE Approval Stamp:
BOM No: HR2L040	ECL No 05	Instruction Issue: 3	Routing revision level 3	Serial No: FM001
Works Order No: AIT0182080	Description Space View Albedo Assembly			Title: Space View Albedo Assembly

ASSEMBLY INTEGRATION & TEST WORK INSTRUCTIONS

ISSUES OF CURRENT RELEVANT DOCUMENTATION AT ISSUE OF WORK INSTRUCTIONS

PRODUCT SPECIFIC DOCUMENTATION

DRAWING NUMBER	TITLE	ISS
HR2L004	Motor Assembly	001
HR2L040	SVA Assembly	002

PROJECT SPECIFIC INSTRUCTIONS

DRAWING NUMBER	TITLE	ISS
DW – MMS - 389	SVA ASSEMBLY PROCEDURE	2
TP – MMS - 451	SVA ASSEMBLY FM TEST PROCEDURE	2

UNIT HAZARDS	PERSONNEL HAZARDS

A	B	C	D	E	F	G	H	I	J	K	L	M	N	O	P	Q	R	S	T	U	V	W	X	Y	Z

ASSEMBLY INSTRUCTION

WARNING

ENSURE THAT DUST COVERS ARE FITTED AT ALL TIMES TO FLIGHT HARDWARE.

GLOVES AND ANTISTATIC WRISTSTRAPS ARE TO BE WORN AT ALL TIMES WHILST IN THE CLEANROOM.

Operation Number	Operation Code	Work Centre	Discipline	Operation Complete	Witness / Inspect
347	Recvd	43AITCR	Mech		

Operation Details

Received from HR2L040 ECL04 MFG0182080.

Operation Number	Operation Code	Work Centre	Discipline	Operation Complete	Witness / Inspect
348	Assy	43AITCR	Mech		

Operation Details

Fit Spring Stop Item 023, torque I.A.W HR2L040 Note 2 and fillet lock I.A.W Note 3.

Operation Number	Operation Code	Work Centre	Discipline	Operation Complete	Witness / Inspect
350	Assy	43AITCR	Mech		

Operation Details

Insert a 0.2mm thick plastic shim between the face of (Item 017) and (Item 028). Close the door using manual operation drive until the shim is clamped in position. Set microswitch 'A' to operate in this position by adjusting stop screws (Item 008). Torque (Item 046) to the Req.'s of PS2039 Appendix 'A'. Fillet lock screw thread IAW Note 3.
Back off both stop screws on microswitch 'B'. Set doorstop screw to just operate microswitch 'B', add a further half turn of the screw to achieve final setting and lock in position using nut (Item 046). Torque nut (Item 046)
Fillet lock (Item046) IAW Note 3.
Set fixed stop to be in contact above stop and locked in position.

MATRA MARCONI SPACE	Project & Charge No: HIRDLS			RE Approval Stamp:
BOM No: HR2L040	ECL No 05	Instruction Issue: 3	Routing revision level 3	Serial No: FM001
Works Order No: AIT0182080	Description Space View Albedo Assembly			Title: Space View Albedo Assembly

Operation Number	Operation Code	Work Centre	Discipline	Operation Complete	Witness / Inspect
360	Vinsp	43AITCR	Mech	S/K.	
Operation Details					
Inspect					

Operation Number	Operation Code	Work Centre	Discipline	Operation Complete	Witness / Inspect
365	Assy	43AITCR	Mech	S/K	
Operation Details					
Remove non flight resistors, and integrate Hi – Rel Resistors Items 033, and torque as per drawing Ref. Note 2.					

Operation Number	Operation Code	Work Centre	Discipline	Operation Complete	Witness / Inspect
366	Assy	43AITCR	Elec	S/K.	
Operation Details					
Remove non flight resistors from harness and wire in Hi – Rel Resistors Items 033 I.A.W DWG Ref. Notes 6 and 10.					

Operation Number	Operation Code	Work Centre	Discipline	Operation Complete	Witness / Inspect
367	Vinsp	43AITCR	Elec	S/K.	
Operation Details					
Inspect.					

MATRA MARCONI SPACE	Project & Charge No: HIRDLS	RE Approval Stamp:

BOM No:	ECL No	Instruction Issue:	Routing revision level	Serial No:
HR2L040	05	3	3	FM001

Works Order No:	Description	Title:
AIT0182080	Space View Albedo Assembly	Space View Albedo Assembly

Operation Number	Operation Code	Work Centre	Discipline	Operation Complete	Witness / Inspect
370	Assy	43AITCR	Mech	S/N.	

Operation Details

Loosely assemble (Items 025 & 026). Align (Item 026) using shield location bung TAA2126. Spot through ∅3.019/3.009mm in (Item 025) and ∅2.997/2.987 in (Item 002). Torque (Items 046 &054) to the required torque listed on SHT '1' of DRG. Press fit and bond (Item 038) using (Items 078,079,080) IAW PS2024 mix '36'.
Shim to suit dimension shown prior to torquing fixings. Torque fixings to 0.50Nm. Fillet lock fixings IAW Note '3' of DRG.

Operation Number	Operation Code	Work Centre	Discipline	Operation Complete	Witness / Inspect
380	Vinsp	43AITCR	Mech	S/N.	

Operation Details

Inspect.

Operation Number	Operation Code	Work Centre	Discipline	Operation Complete	Witness / Inspect
390	CLEAN	43AITCR	Mech	S/N.	

Operation Details

Clean assembly I.A.W PS2058 Grade 2X.

Weigh and Record. 1665 g. 1.665 kg

Operation Number	Operation Code	Work Centre	Discipline	Operation Complete	Witness / Inspect
400	AITEI	430AITEI		S/K.	

Operation Details

Perform preliminary electrical tests and determine torque limiting resistor value as detailed in TP-MMS-451 (3164-SA028-TPF) Sections 4.2.1 & 4.3.

Operation Number	Operation Code	Work Centre	Discipline	Operation Complete	Witness / Inspect
410	AITEB	430AITEB		S/K.	

Operation Details

Perform Baseline Functional Test I.A.W (3164-SA028-TPF).Section 4.4.

Operation Number	Operation Code	Work Centre	Discipline	Operation Complete	Witness / Inspect
420	AITPS	430AITPS		S/K	

Operation Details

Flight pack SVA Assembly, double bag including desiccant and back fill with White Spot Nitrogen, ensure that G shock nd Humidity Indicators are attached to the SVA Handling Fixture

Operation Number	Operation Code	Work Centre	Discipline	Operation Complete	Witness / Inspect
430	AITPS	430AITPS	Mech	S/K.	

Operation Details

Ship boxed SVA to EVT.

MATRA MARCONI SPACE	Project & Charge No: HIRDLS			RE Approval Stamp:
BOM No: HR2L040	ECL No 05	Instruction Issue: 3	Routing revision level 3	Serial No: FM001
Works Order No: AIT0182080	Description Space View Albedo Assembly			Title: Space View Albedo Assembly

Operation Number	Operation Code	Work Centre	Discipline	Operation Complete	Witness / Inspect
440	Vinsp	43AITCR	Mech	S/K.	

Operation Details

Unpack assembly in EVT laminar flow tent. A visual inspection of the SVA shall be performed and a check to verify the G shock indicator and Humidity Indicators are OK.

Operation Number	Operation Code	Work Centre	Discipline	Operation Complete	Witness / Inspect
450	VI01	170EVTI		S/K.	

Operation Details

Support EVT in Vibration Test as Detailed in TP-MMS-451 (2164-SA028-TPF) Section 4.5.

Operation Number	Operation Code	Work Centre	Discipline	Operation Complete	Witness / Inspect
460	AITPS	430AITPS		S/K.	

Operation Details

Flight pack SVA Assembly, double bag including desiccant and back fill with White Spot Nitrogen, ensure that G shock and Humidity Indicators are attached to the SVA Handling Fixture

Operation Number	Operation Code	Work Centre	Discipline	Operation Complete	Witness / Inspect
470	AITPS	430AITPS	Mech	S/K.	

Operation Details

Ship boxed SSH to BLDG 48 HIRDLS cleanroom.

MATRA MARCONI SPACE	Project & Charge No: HIRDLS			RE Approval Stamp:
BOM No: HR2L040	ECL No 05	Instruction Issue: 3	Routing revision level 3	Serial No: FM001
Works Order No: AIT0182080	Description Space View Albedo Assembly			Title: Space View Albedo Assembly

Operation Number	Operation Code	Work Centre	Discipline	Operation Complete	Witness / Inspect
480	Vinsp	43AITCR	Mech		

Operation Details

Unpack assembly in a class 100,000 cleanroom. A visual inspection of the SVA shall be performed and a check to verify the G shock indicator and Humidity Indicators are OK.

Operation Number	Operation Code	Work Centre	Discipline	Operation Complete	Witness / Inspect
490	AITPVT	43AITCR	Elec		

Operation Details

Perform Post Vibration Functional Test I.A.W TP-MMS-451 (3164-SA028-TPF).Section 4.6.

Operation Number	Operation Code	Work Centre	Discipline	Operation Complete	Witness / Inspect
500	AITPS	430AITPS	Mech		

Operation Details

'light pack SVA Assembly, double bag including desiccant and back fill with White Spot Nitrogen, ensure that G shock and Humidity Indicators are attached to the SVA Handling Fixture

Operation Number	Operation Code	Work Centre	Discipline	Operation Complete	Witness / Inspect
510	AITPS	430AITPS	Mech		

Operation Details

Ship boxed SVA to EVT.

MATRA MARCONI SPACE	Project & Charge No: HIRDLS			RE Approval Stamp:
BOM No: HR2L040	ECL No 05	Instruction Issue: 3	Routing revision level 3	Serial No: FM001
Works Order No: AIT0182080	Description Space View Albedo Assembly			Title: Space View Albedo Assembly

Operation Number	Operation Code	Work Centre	Discipline	Operation Complete	Witness / Inspect
520	Vinsp	43AITCR	Mech	S/K.	

Operation Details

Unpack assembly in a class 100,000 cleanroom. A visual inspection of the SVA shall be performed and a check to verify the G shock indicator and Humidity Indicators are OK.

Operation Number	Operation Code	Work Centre	Discipline	Operation Complete	Witness / Inspect
530	TV01	430AITET	Elec	S/K	

Operation Details

Perform thermal Vac test I.A.W the SVA Assembly FM Test Procedure TP-MMS-451 (3164-SA028-TPF).Section 4.7. All results to be entered into this document.

Operation Number	Operation Code	Work Centre	Discipline	Operation Complete	Witness / Inspect
540	AITPS	430AITPS	Mech	S/K	

Operation Details

Flight pack SVA Assembly, double bag including desiccant and back fill with White Spot Nitrogen, ensure that G shock and Humidity Indicators are attached to the SVA Handling Fixture

Operation Number	Operation Code	Work Centre	Discipline	Operation Complete	Witness / Inspect
550	AITPS	430AITPS	Mech	S/K.	

Operation Details

Ship boxed SVA to BLDG 43 cleanroom HIRDLS Area.

MATRA MARCONI SPACE	Project & Charge No: HIRDLS	RE Approval Stamp:

BOM No:	ECL No	Instruction Issue:	Routing revision level	Serial No:
HR2L040	05	3	3	FM001

Works Order No:	Description	Title:
AIT0182080	Space View Albedo Assembly	Space View Albedo Assembly

Operation Number	Operation Code	Work Centre	Discipline	Operation Complete	Witness / Inspect
560	Vinsp	43AITCR	Mech		

Operation Details

Unpack assembly in a class 100,000 cleanroom. A visual inspection of the SSH shall be performed and a check to verify the G shock indicator and Humidity Indicators are OK.

Operation Number	Operation Code	Work Centre	Discipline	Operation Complete	Witness / Inspect
570	Finsp	43AITCR	Mech		

Operation Details

Final Inspect assembly and all relevant paperwork and route data pack to Bldg 43 top floor.

MATRA MARCONI SPACE	Project & Charge No: HIRDLS	RE Approval Stamp:

BOM No:	ECL No	Instruction Issue:	Routing revision level	Serial No:
HR2L040	05	3	3	FM001

Works Order No:	Description	Title:
AIT0182080	Space View Albedo Assembly	Space View Albedo Assembly

MIX RECORD

OP No.	Mix Number	Mix Type	Batch Number	Used Against	User's Stamp
348	5262	EPIKOTE	PM28005/1	MIX USED TO FILLET LOCK ALL	S
350		VERSAMID	PM29040/3	FIXINGS, BOND 20FF T/BASES,	
365		SILICA	GZ363676	SPOT BOND CABLES, LOCK LACING	
370				CHORD KNOTS AT T/BASES.	

MATRA MARCONI SPACE	Project & Charge No: HIRDLS	RE Approval Stamp:

BOM No:	ECL No	Instruction Issue:	Routing revision level	Serial No:
HR2L040	05	3	3	FM001

Works Order No:	Description	Title:
AIT0182080	Space View Albedo Assembly	Space View Albedo Assembly

AS REQUIRED RECORD

ITEM	BATCH NUMBER

MATRA MARCONI SPACE	Project & Charge No: HIRDLS			RE Approval Stamp:
BOM No: HR2L040	ECL No 05	Instruction Issue: 3	Routing revision level 3	Serial No: FM001
Works Order No: AIT0182080	Description Space View Albedo Assembly			Title: Space View Albedo Assembly

INCIDENT AND OBSERVATION RECORD

Op No	NCR No	INCIDENT	STAMP	DATE

MMS Routing Card

Part Number	ECL	RRL	Project / WBS
HR2L040	05	3	17143/733002

Item Description
SPACE VIEW ALBEDO ASSEMBLY

Work Order Number	Quantity	Release Date	Due Date
AIT0182080	1	06/08/1999	14/10/1999

Start

Finish

Op.No.	Work Centre	Mach.No.	Description	Stamp
347	43AITCR	MECH	RECEIVED FROM MFG0182080. HR2L040 ECL04.	S
348	43AITCR	MECH	ASSEMBLE IN ACCORDANCE WITH RELEVANT WORK INSTRUCTION / DRAWING	S
350	43AITCR	MECH	ASSEMBLE IN ACCORDANCE WITH RELEVANT WORK INSTRUCTION / DRAWING	S
360	43AITCR	MECH	VISUAL INSPECT	S

Part Number	ECL	RRL	Project / WBS
HR2L040	05	3	17143/733002

Item Description
SPACE VIEW ALBEDO ASSEMBLY

Work Order Number	Quantity	Release Date	Due Date
AIT0182080	1	06/08/1999	14/10/1999

Start Finish

Op.No.	Work Centre	Mach.No.	Description	Stamp
365	43AITCR	MECH	ASSEMBLE IN ACCORDANCE WITH RELEVANT WORK INSTRUCTION / DRAWING	
366	43AITCR	MECH	ASSEMBLE IN ACCORDANCE WITH RELEVANT WORK INSTRUCTION / DRAWING	
367	43AITCR	MECH	VISUAL INSPECT (MECH) IAW WORK INSTRUTIONS/PROCEDURE	
370	43AITCR	MECH	ASSEMBLE IN ACCORDANCE WITH RELEVANT WORK INSTRUCTION / DRAWING	

Part Number	ECL	RRL	Project / WBS
HR2L040	05	3	17143/733002

Item Description
SPACE VIEW ALBEDO ASSEMBLY

Work Order Number	Quantity	Release Date	Due Date
AIT0182080	1	06/08/1999	14/10/1999

Start Finish

Op.No.	Work Centre	Mach.No.	Description	Stamp
380	43AITCR	MECH	VISUAL INSPECT	
390	43AITCR	MECH	CLEAN IN ACCORDANCE WITH RELEVANT SPECIFICATION.	
400	430AITEI	NONE	AIT ELECTRICAL INTEGRATION I.A.W. WORK INSTRUCTION.	
410	430AITEB	NONE	AIT ELECTRICAL BASELINE I.A.W. WORK INSTRUCTION.	

Part Number	ECL	RRL	Project / WBS
HR2L040	05	3	17143/733002

Item Description
SPACE VIEW ALBEDO ASSEMBLY

Work Order Number	Quantity	Release Date	Due Date
AIT0182080	1	06/08/1999	14/10/1999

Start Finish

Op.No.	Work Centre	Mach.No.	Description	Stamp
420	430AITPS	NONE	AIT PACK SVA ASSEMBLY. I.A.W. WORK INSTRUCTION.	S
430	430AITPS	NONE	AIT SHIP SVA ASSEMBLY I.A.W. WORK INSTRUCTION.	S
440	43AITCR	MECH	VISUAL INSPECT (MECH) IAW WORK INSTRUTIONS/PROCEDURE	S
450	170ETVI	NONE	VIBRATION TEST I.A.W. WORK INSTRUCTION.	S

Part Number	ECL	RRL	Project / WBS
HR2L040	05	3	17143/733002

Item Description
SPACE VIEW ALBEDO ASSEMBLY

Work Order Number	Quantity	Release Date	Due Date
AIT0182080	1	06/08/1999	14/10/1999

Start Finish

Op.No.	Work Centre	Mach.No.	Description	Stamp
460	430AITPS	NONE	AIT PACK SVA ASSEMBLY I.A.W. WORK INSTRUCTION.	S
470	430AITPS	NONE	AIT SHIP SVA ASSEMBLY I.A.W. WORK INSTRUCTION.	S
480	43AITCR	MECH	VISUAL INSPECT (MECH) IAW WORK INSTRUTIONS/PROCEDURE	S
490	43AITCR	ELEC	POST VIBRATION TEST. I.A.W.WORK INSTRUCTION	S

Part Number	ECL	RRL	Project / WBS
HR2L040	05	3	17143/733002

Item Description
SPACE VIEW ALBEDO ASSEMBLY

Work Order Number	Quantity	Release Date	Due Date
AIT0182080	1	06/08/1999	14/10/1999

Start Finish

Op.No.	Work Centre	Mach.No.	Description	Stamp
500	430AITPS	NONE	AIT PACK SVA ASSEMBLY I.A.W. WORK INSTRUCTION.	S
510	430AITPS	NONE	AIT SHIP SVA ASSEMBLY I.A.W. WORK INSTRUCTION.	S
520	43AITCR	MECH	VISUAL INSPECT (MECH) IAW WORK INSTRUTIONS/PROCEDURE	S
530	230ETTV	NONE	THERMAL VACUUM	S

Part Number	ECL	RRL	Project / WBS
HR2L040	05	3	17143/733002

Item Description
SPACE VIEW ALBEDO ASSEMBLY

Work Order Number	Quantity	Release Date	Due Date
AIT0182080	1	06/08/1999	14/10/1999

Start Finish

Op.No.	Work Centre	Mach.No.	Description	Stamp
540	430AITPS	NONE	AIT PACK SVA ASSEMBLY I.A.W. WORK INSTRUCTION.	S
550	430AITPS	NONE	AIT SHIP SVA ASSEMBLY I.A.W. WORK INSTRUCTION.	S
560	43AITCR	MECH	VISUAL INSPECT (MECH) IAW WORK INSTRUTIONS/PROCEDURE	S
570	43AITCR	MECH	FINAL INSPECT JOB AND RELEVANT PAPERWORK I.A.W. WORK INSTRUCTION.	S

SECTION 4

Test Event Log

MATRA MARCONI SPACE	OCCURRENCE REPORT *FICHE D'INCIDENT*	Ref : HR.NCR.00001.MMS Issue : - / - Date : 19/01/2000 Page : 1/2

Project - *Projet* HIRDALS	**Occurrence type and Classification** - *Type d'incident et classification* Non Conformance Report Major ☐ Minor ☑	
Found during - *Détecté durant* MMS environment tests	**Observation site** - *Lieu d'observation*.....	
Critical item - *Elément critique* Yes ☐ No ☐	**Item designat°** - *Nom élément :* SVA	**Supplier** - *Fournisseur :* MMS
Item ID : 2L / **Model :** FM	**MHR / Batch nb :** AIT0182080	**Serial Nb or Qty of affected items :** F001,AIT0182080
Spec / Drawing / Procedure Ref and issue 3164 - SA028 - TPF Iss. 3		**Originator :** N. CROSSLAND Visa

Short description - *Titre :* FM SVA Vibration Test

Detailed description - *Description détaillée*
Clerical error in updating from EM test procedure-wrong frequency break points identified for random vibration test - peak level should be between 160-250Hz. FM levels correct. YY 1st axis vibration - Changes noted between pre & post vibration test

Suspected cause - *Cause suspectée*
Changes concluded to be due to unit structure of compressed tubular seal, pre-tensioned springs and moving parts "bedding in / settling". Supported by fact that degree of changes significantly reduced in next 2 axes.

Disposition : Use as is | **RFW** - *Dérogation :*.....

Curative action : No further action

MRB / CRM APPROVAL					*CUSTOMER APPROVAL* (Doc ref. or signature)
Name	D.G. Brewster	K STEWART			N/A.
Function	Quality	Ingeniering			
Date - Visa	19-01-00				

Disposition and curative action verification Name : ..... Date :	**Closure** - *Clôture* Quality responsible : D.G. Brewster Date : 20-1-00
Corrective action : N/A	***Corrective action verification (closure 2)*** Quality responsible : — Date : 20-1-00

SECTION 4

Test Event Log

Functional Testing

WORKING COPY

HIRDLS

TP-MMS-451
(3164-SA028-TPF)
Issue 3

HIGH RESOLUTION DYNAMICS LIMB SOUNDER

Originator: R Coupe

Date: 21 September, 1999

Subject/Title: **Space View Aperture Assembly FM Test Procedure**

Description/Summary/Contents:

This document details the test plan and requirement to qualify the HIRDLS SVA assembly at unit level, and is applicable to the FM unit.

Keywords: FM, Space View Aperture, Test Procedure

Purpose of thisDocument: FM Test Procedure

Reviewed/Approved by: Date (yy-mm-dd):			

Matra Marconi Space
Anchorage Road
Portsmouth
Hampshire PO3 5PU
England

EOS

SPACE VIEW APERTURE ASSEMBLY
FM TEST PROCEDURE

TP-MMS-451

Responsible Engineer: N Crossland Date: 21st Sept 1999

Quality Assurance: Date: 23-9-99

Project Manager: Date:

© MATRA MARCONI SPACE UK LIMITED

THE COPYRIGHT IN THIS DOCUMENT IS THE PROPERTY OF MATRA MARCONI SPACE UK LIMITED. This document is supplied by Matra Marconi Space UK Limited on the express terms that it is to be treated as confidential and that it may not be copied, used or disclosed to others for any purpose except as expressly authorised under the terms of Contract No N2A 3R 0386.

Any person, other than the authorised holder, who finds or otherwise obtains possession of the document, should post it, together with his/her name and address, to the Registry, Matra Marconi Space UK Limited, Anchorage Road, Portsmouth, England, PO3 5PU.
Postage will be refunded.

CONTENTS

1. SCOPE 4

2. APPLICABLE DOCUMENTS 4

2.1 DOCUMENTS 4
2.2 DRAWINGS 4

3. TEST PLAN 4

3.1 MODEL PHILOSOPHY 4
3.2 TEST SPECIMEN 4
3.3 TEST SEQUENCE 4

4. TEST REQUIREMENT 5

4.1 GENERAL REQUIREMENTS 5
4.2 PRELIMINARY TESTS 5
4.2.1 Preliminary Electrical Tests 5
4.3 DETERMINE TORQUE LIMITING RESISTOR VALUE 5
4.4 BASELINE FUNCTIONAL TEST 6
4.4.1 Hinge Drive Axis - vertical configuration test 6
4.4.2 Hinge Drive Axis - horizontal configuration test 7
4.5 VIBRATION TEST 7
4.5.1 Sine Survey 8
4.5.2 Random Vibration 8
4.6 POST VIBRATION FUNCTION TEST 9
4.6.1 Test Results 9
4.7 THERMAL VACUUM TEST 10
4.7.1 Test Configuration 10
4.7.2 Functional tests 12

APPENDIX A DETAILED TEST INSTRUCTIONS 13

DISTRIBUTION LIST 26

CHANGE RECORD 26

1. SCOPE

This document details the test plan and requirement to verify the HIRDLS Space View Aperture Assembly Flight Model at unit level.

2. APPLICABLE DOCUMENTS

2.1 Documents

a) Sun Shield Requirement Specification SP-HIR-50.
b) STH, SSH and SVA Design Development and Test Plan TP-MMS-248.
c) Manual for SSH & SVA Test equipment (EGSE) TC-MMS-400

2.2 Drawings

a) Space View Albedo Shield assembly -HR2L040
b) Vibration Fixture - TAA2203.
c) Thermal Vacuum and Assembly Fixture - TAA2217.

3. TEST PLAN

3.1 Model Philosophy

The SVA model philosophy is defined in the STH, SSH and SVA DD&T plan, AD2.1 (b). The FM will be subjected to the acceptance level tests described herein.

3.2 Test Specimen

The test specimen is the SVA assembly FM unit - HR2L040.

3.3 Test Sequence

The test sequence for the FM SVA assembly is as follows:-

- Baseline functional test.
- Thermal vacuum test.
- Vibration test.
- Post Vibration functional test.

4. TEST REQUIREMENT

This Section details the full test programme which shall be implemented to verify the Space View Aperture Assembly FM at unit level. The instruction sheets included in Appendix A are intended as an aid to the test flow and as a pro forma for the test results. They should be used in conjunction with the main body of this procedure and modified expediently if required.

4.1 General Requirements

The following general requirements are applicable throughout the course of all testing :-

After each motor drive operation cycle, prior to subsequent operation cycle allow :-
15 minutes for motor to cool in vacuum
5 minutes for motor to cool in air

Once motor has stalled after operation cycle, it should be switched off immediately

4.2 Preliminary Tests

Motor assembly HR2L004 to be tested to verify operation of both motors prior to integration into HR2L040. Test in accordance with PO-DIS-MMB-GM-0030 - Motor assembly burn-in test.

- Set up SVA assembly (HR2L040) in assembly fixture (TAA2217) with cover hinge axis vertical.
- Determine torque to manually operate mechanism.

4.2.1 Preliminary Electrical Tests

Fit saver connector to SVA connector
Connect motor flying leads together temporarily to complete motor drive circuits

- Verify terminal resistance of both SVA motors (prime and redundant): 22.7Ω ± 12.5%
- Verify microswitches open and close status against position
- Verify resistance of thermistors at 20°C ≅ 2.8KΩ and that the drive is positive.
- Determine resistance of grounding between cover and baseplate.
- Verify pin connections with respect to each thermistor location (sketch configuration)

4.3 Determine Torque limiting resistor value

Connect short cable harness to breakout box, connect power supply +ve lead to pin 3 and -ve lead to pin 14, for motor A. (Connect power supply +ve lead to pin 4 and -ve lead to pin9, for motor B.) These configurations will open the cover

- Set power supply to 0 Volts and 0.5 Amps.
- Gradually increase voltage of power supply until drive starts to rotate.
- Allow mechanism to fully open cover and switch off power supply.
- Reverse +ve and -ve power supply leads switch on power supply.
- Allow mechanism to fully close cover and switch off power supply.

Using the following parameters calculate the torque limiting resistor value required to provide a torque margin of x3 when operated at 28V.

- Terminal resistance $R1$
- Minimum operating voltage $V1$

$$\text{Resistor Value} = \left\{\frac{R1 \times 28}{V1 \times 3}\right\} - R1$$

Repeat above operations using motor B.

4.4 Baseline Functional Test

4.4.1 Hinge Drive Axis - vertical configuration test

Set up SVA assembly (HR2L040) in assembly fixture (TAA2127) with cover hinge axis vertical.
Connect HIRDLS EGSE cable harness to SVA connector (refer to manual TC-MMS-400 para 4.1) and set parameters on screen.

Alternatively, if EGSE is not available :-
Connect short cable harness to breakout box, connect power supply +ve lead to pin 3 and -ve lead to pin 14, for motor A. (Connect power supply +ve lead to pin 4 and -ve lead to pin9, for motor B.) These configurations will open the cover

- Set power supply to 28 Volts and 0.5 Amps.
- Switch on power supply
- Allow mechanism to fully open cover and switch off power supply.
- Verify fully open microswitch indicates correct status of cover.
- Reverse +ve and -ve power supply leads switch on power supply.
- Allow mechanism to fully close cover and switch off power supply.
- Verify fully closed microswitch indicates correct status of cover.
- Set power supply to 0 Volts and 0.5 Amps.
- Reverse +ve and -ve power supply leads switch on power supply.
- Gradually increase voltage of power supply until drive starts to rotate. (Record voltage)
- Switch off power supply, increase voltage of power supply to 28V, switch on power supply.
- Allow mechanism to fully open cover and switch off power supply.
- Verify fully closed microswitch indicates correct status of cover.
- Set power supply to 0 Volts and 0.5 Amps.
- Reverse +ve and -ve power supply leads switch on power supply.
- Gradually increase voltage of power supply until drive starts to rotate. (Record voltage)
- After cover rotates to close position and stalls, gradually increase voltage of power supply until drive starts to rotate. (Record voltage)
- Allow mechanism to fully close cover and switch off power supply.
- Verify fully closed microswitch indicates correct status of cover.
- Repeat opening / closing to a total of 10 operations

4.4.2 Hinge Drive Axis - horizontal configuration test

Set up SVA assembly (HR2L040) in assembly fixture (TAA2217) with cover hinge axis horizontal. Repeat operations detailed in para 4.3.1.

4.5 Vibration Test

The FM unit shall undergo workmanship level random vibration testing. Low level sine surveys shall be performed before and after each random vibration test to verify that the dynamic characteristics of the unit have not changed. The test sequence shall be as follows :

For each axis in turn (no preference for the order):

Low level sine survey	(See Section 4.5.1)
Workmanship level random vibration	(See Section 4.5.2)
Low level sine survey	(See Section 4.5.1)

The vibration axes and accelerometer positions are defined in Figure 4.5-1. For testing, the SVA shall be mounted to the vibration fixture (Drawing No. TAA2203) in accordance with the top level Assembly Drawing (No. HR2L040) requirements.

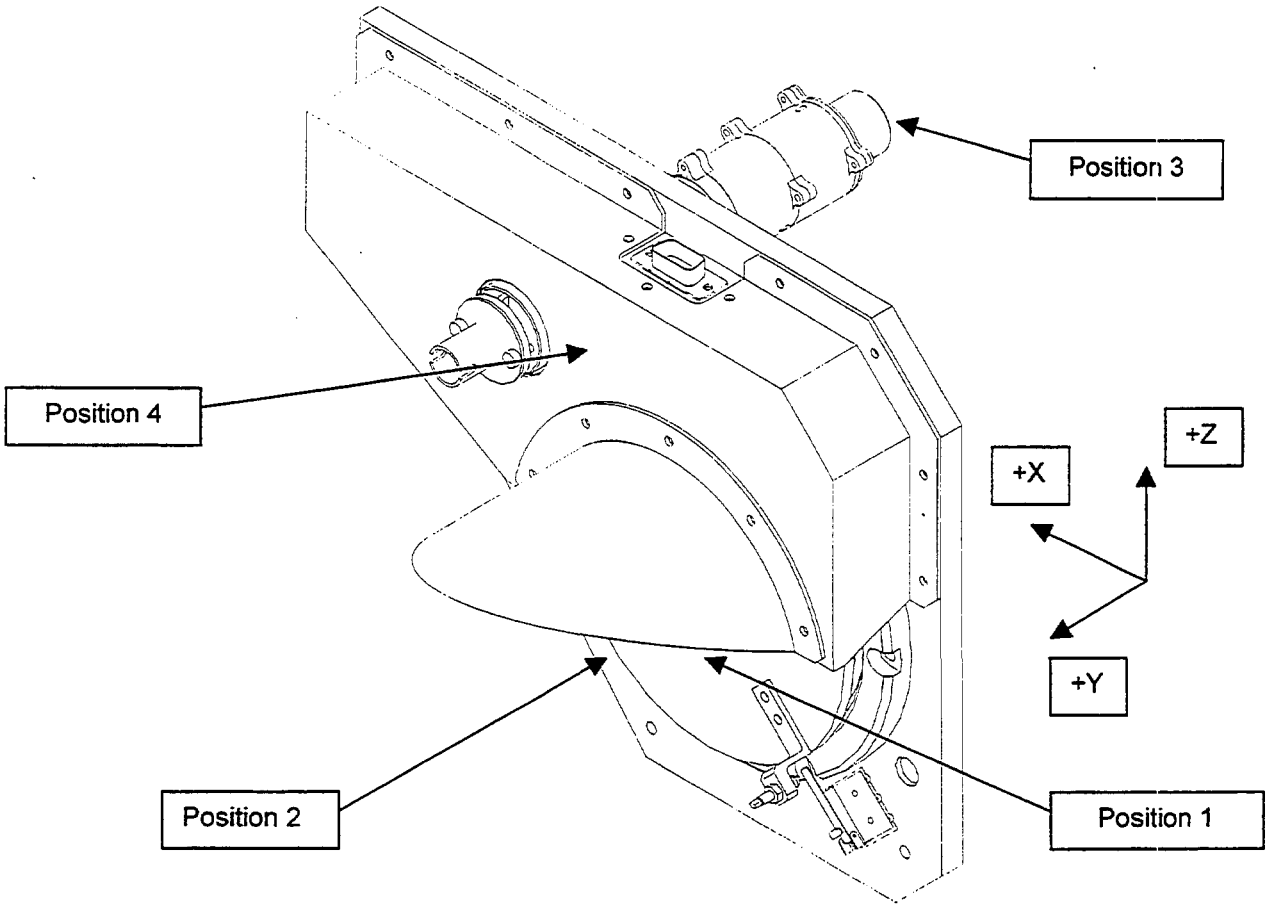

Figure 4.5-1 Test Axes and Instrumentation Definition for Vibration Test

Tri-axial accelerometers shall be mounted at each of the positions shown which are summarised below.

Position 1 Centre of Aperture cover
Position 2 SVA baseplate adjacent to door
Position 3 End of the Motor Housing
Position 4 Albedo Shield Cover

Note: Refer to Test Director for exact positions of instrumentation

4.5.1 Sine Survey

Low level sine surveys shall comprise a single sweep from 5 to 2000 Hz at a sweep rate of 2 octaves/minute and at a level of 0.2g.

4.5.2 Random Vibration

Workmanship test levels are given in Table 4.5-2. FM tests shall have a duration of 60 seconds per axis.

Axis	Frequency (Hz)	Level (g^2/Hz)	Total Level (grms)
	20	0.01	)
X	20-50	+3 dB/oct	)
Y	50-800	0.08	) 7.4
Z	800-2000	- 3 dB/oct	)

Table 4.5-2 Random Vibration Workmanship Test

4.6 Post Vibration Function Test

Connect HIRDLS EGSE cable harness to SVA connector (refer to manual TC-MMS-400 para 4.1) and set parameters on screen.

Alternatively, if EGSE is not available :-
Connect short cable harness to breakout box, connect power supply +ve lead to pin 3 and -ve lead to pin 14, for motor A. (Connect power supply +ve lead to pin 4 and -ve lead to pin9, for motor B.) These configurations will open the cover

- Set power supply to 28 Volts and 0.5 Amps.
- Switch on power supply
- Allow mechanism to fully open cover and switch off power supply.
- Verify fully open microswitch indicates correct status of cover.
- Reverse +ve and -ve power supply leads switch on power supply.
- Allow mechanism to fully close cover and switch off power supply.
- Verify fully closed microswitch indicates correct status of cover.
- Set power supply to 0 Volts and 0.5 Amps.
- Reverse +ve and -ve power supply leads switch on power supply.
- Gradually increase voltage of power supply until drive starts to rotate.(Record voltage)
- Switch off power supply, increase voltage of power supply to 28V, switch on power supply.
- Allow mechanism to fully open cover and switch off power supply.
- Verify fully closed microswitch indicates correct status of cover.
- Set power supply to 0 Volts and 0.5 Amps.
- Reverse +ve and -ve power supply leads switch on power supply.
- Gradually increase voltage of power supply until drive starts to rotate.(Record voltage)
- After cover rotates to close position and stalls, gradually increase voltage of power supply until drive starts to rotate.(Record voltage)
- Allow mechanism to fully close cover and switch off power supply.
- Verify fully closed microswitch indicates correct status of cover.
- Repeat opening / closing to a total of 4 operations

4.6.1 Test Results

Compare post-vibration test results with the baseline functional test results (Para 4.3).

4.7 Thermal Vacuum Test

The FM unit shall be tested in vacuum (<10^{-5} Torr) at its upper and lower acceptance temperature limits whilst operational and when driven by representative electronics. The thermal vacuum test profile is shown in Figure 4.5-1. The SVA shall be mounted so that the hinge axis is vertical. The test shall be controlled by the reference thermocouple which shall be attached to the baseplate.

The time duration spent at each upper or lower limit shall be a minimum of 4 hours (see Figure 4.5-1). The rate of change between limits shall not exceed 5°C/min.

Acceptance temperature limits are given in Table 4.5-1.

Operating	
Min	**Max**
-25	25

Table 4.5-1 : Acceptance Temperature Limits (°C)

The time duration (minimum) spent at each limit and the maximum rate of change between limits, shall be 4 hours and 5°C/min respectively (see Figure 4.5-1). The unit shall be tested through 4 complete thermal cycles.

4.7.1 Test Configuration

Fit SVA to assembly fixture TAA2127. Fastener torque tightening requirements are detailed in SVA assembly drawing HR2L040.

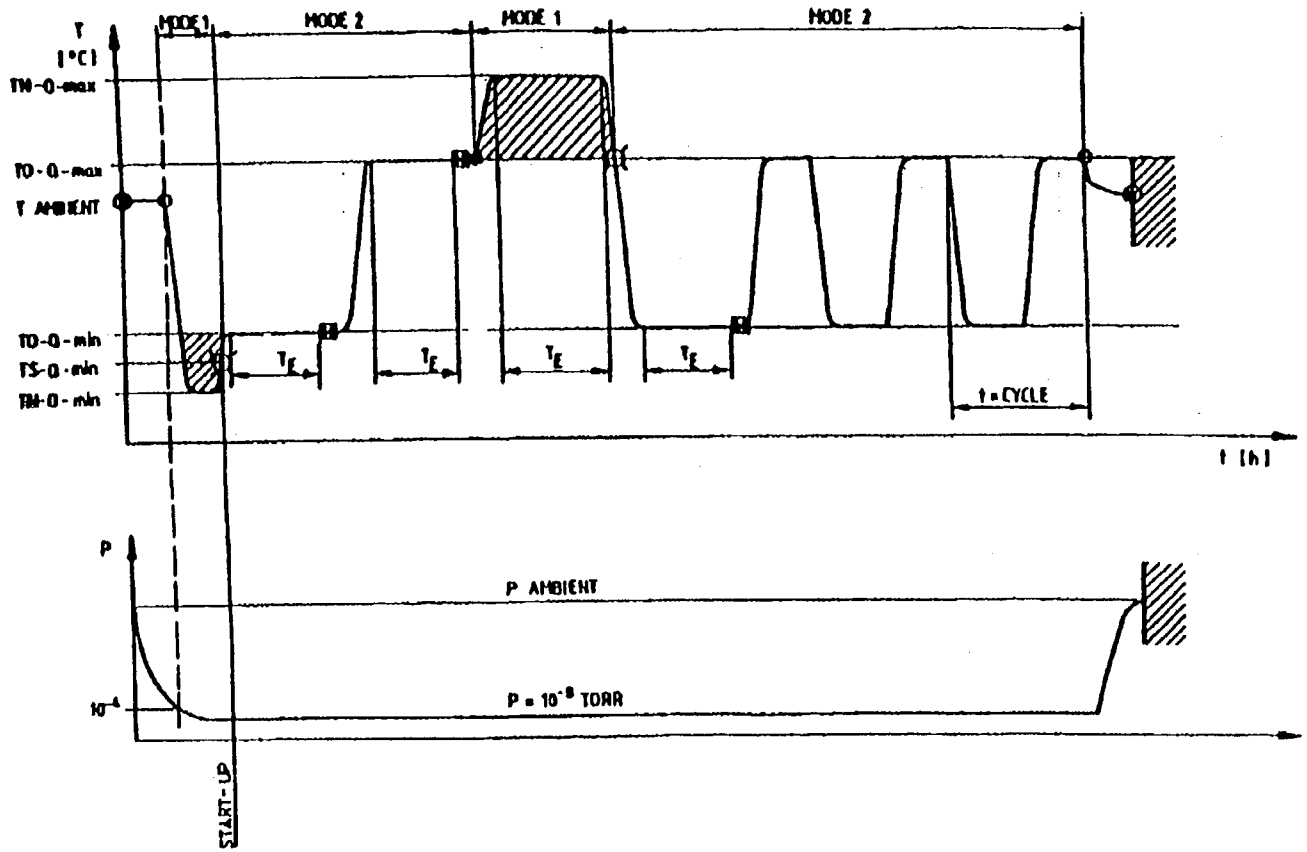

Figure 4.5-1 : SVA Thermal Vacuum Test Profile (GENERIC FOR QUAL + ACCEPTANCE)

4.7.2 Functional tests

The tests detailed below are to be performed:-

prior to closing chamber,
after cold temperature soak at -25°C,
after raising temperature to 25°C, and
at ambient temperature (in vacuum) after completion of 4 thermal cycles.

This represents a total of 16 operations (8 with motor A selected, and 8 with motor B selected).

Set up SVA assembly (HR2L040) in assembly fixture (TAA2127) with cover hinge axis horizontal. Connect short cable harness to HIRDLS EGSE (refer to manual TC-MMS-400 para 4.1) and set parameters on screen.

Alternatively, if EGSE is not available :-
Connect short cable harness to breakout box, connect power supply +ve lead to pin 3 and -ve lead to pin 14, for motor A. (Connect power supply +ve lead to pin 4 and -ve lead to pin9, for motor B.) These configurations will open the cover

- Set power supply to 28 Volts and 0.~~5~~4 Amps.
- Switch on power supply
- Allow mechanism to fully open cover and switch off power supply.
- Verify fully open microswitch indicates correct status ofcover.
- Reverse +ve and -ve power supply leads switch on power supply.
- Allow mechanism to fully close cover and switch off power supply.
- Verify fully closed microswitch indicates correct status of cover.
- Set power supply to 0 Volts and 0.~~5~~14 Amps.
- Reverse +ve and -ve power supply leads switch on power supply.
- Gradually increase voltage of power supply until drive starts to rotate.(Record voltage)
- Switch off power supply, increase voltage of power supply to 28V, switch on power supply.
- Allow mechanism to fully open cover and switch off power supply.
- Verify fully closed microswitch indicates correct status of cover.
- Set power supply to 0 Volts and 0.~~5~~14 Amps.
- Reverse +ve and -ve power supply leads switch on power supply.
- Gradually increase voltage of power supply until drive starts to rotate.(Record voltage)
- After cover rotates to close position and stalls, gradually increase voltage of power supply until drive starts to rotate.(Record voltage)
- Allow mechanism to fully close cover and switch off power supply.
- Verify fully closed microswitch indicates correct status of cover.
- Repeat the above sequence for motor B.

4.7.2.1 Test results

Open chamber to inspect SVA assembly.
Compare these test results with the baseline functional test results (Para 4.3) and calculate torque margins.

APPENDIX A DETAILED TEST INSTRUCTIONS

Para	Activity	Results	Comments
4.1	**Preliminary Tests** **Perform Motor Assembly burn-in test i.a.w. PO-DIS-MMB-GM-0030** Set up SVA in fixture with cover hinge axis vertical **Determine torque to manually operate mechanism**	5-1-00 RTSC MAX AT LOCK 1.54NM OTHER POSITIONS 1.0NM.	Completed with acceptable result RTSC.
4.1.1	**Preliminary Electrical Tests** Fit saver connector to SVA connector Connect motor flying leads together **Measure terminal resistance of both SVA motors (primary and redundant)** **Verify open and close status of microswitches with respect to cover position** **Measure resistance of thermistors at 20°C** **Measure electrical resistance between cover and baseplate** **Sketch thermistor wiring diagram with pin connections**	34.1Ω (INC 12Ω RESISTOR) 33.0Ω (") BOTH SWITCHES FUNCTION OK THERMISTOR A – 1.9MΩ 20 MΩ.	PRIMARY MOTOR PINS 14 & 3 RED " " 4 & 9 RTSC. THERMISTOR B - 1.9MΩ RTSC.
4.2	**Determine Torque Limiting Resistor Value** **(a) Motor A** SERIAL No 99L31687 Connect cable harness to breakout box, connect power supply +ve lead to Pin 3 and –ve lead to Pin 14 **Determine power supply voltage required to initiate drive at 0.5 Amps** 0.4 Allow mechanism to fully open cover and switch off power supply Reverse +ve and –ve power supply leads, allow mechanism to fully close cover and switch off power supply **Calculate torque limiting resisting value**	5.2V.	PIN 3 & 14 TO BE REVERSED.
	(a) Motor B SERIAL No 99L31688 Connect cable harness to breakout box, connect power supply +ve lead to Pin 4 and –ve lead to Pin 9 **Determine power supply voltage required to initiate drive at 0.5 Amps** Allow mechanism to fully open cover and switch off power supply	5.8V	PIN 4 & 9 TO BE REVERSED

Para	Activity	Results	Comments
4.2	**Cont.** Reverse +ve and –ve power supply leads, allow mechanism to fully close cover and switch off power supply **Calculate torque limiting resisting value**	Closing time 5 sec	Resistor Value $= \left(\frac{R_1 \times 28}{V_1 \times 3}\right) - R_1$ Motor A. $R_1 = 20.9\,\Omega$, $V_1 = 5.2\,V$ Motor B $R_1 = 21.2\,\Omega$, $V_1 = 5.8\,V$
4.3	**Baseline Functional Test**		
4.3.1	**Hinge Drive Axis – vertical configuration test**		A/ $\left(\frac{20.9 \times 28}{5.2 \times 3}\right) - 20.9 = 16.6\,\Omega$
	(a) Motor A 0.4 ~~0.5~~ EGSE Set power supply to 28 Volts and 0.~~5~~ Amps (using EGSE or manually) Switch on power supply, allow mechanism to fully open cover and switch off power supply	Open time 5 sec.	B/ $\left(\frac{21.2 \times 28}{5.8 \times 3}\right) - 21.2 = 12.9\,\Omega$
	Verify fully open microswitch indicates correct status of cover Reverse +ve and –ve power supply leads, allow mechanism to fully close cover and switch off power supply	OK,	12 Ω RESISTOR SELECTED
	Verify fully closed microswitch indicates correct status of cover Set power supply to 0 Volts and 0.~~5~~ 0.4 Amps ~~EGSE~~ Reverse +ve and –ve power supply leads, switch on power supply	OK 9.3V.	
	Measure minimum operating drive voltage Switch off power supply, increase power supply voltage to 28 Volts, allow mechanism to fully open cover and switch off power supply		
	Verify fully closed microswitch indicates correct status of cover Set power supply to 0 Volts and 0.~~5~~ 0.4 Amps Reverse +ve and –ve power supply leads and switch on power supply	OK 2.4 ~~6.0~~ V	(2.4V TO INITIATE ROTATION)
	Measure minimum operating drive voltage **After motor stalls at close position, determine voltage to initiate drive** Allow mechanism to fully close cover and switch off power supply **Verify fully closed microswitch indicates correct status of cover**	6.0V	
	(b) Motor B 0.4 ~~0.5~~ EGSE Set power supply to 28 Volts and 0.~~5~~ Amps (using EGSE or manually)		

Para	Activity	Results	Comments
4.3.1	**Cont.**		
	Switch on power supply, allow mechanism to fully open cover and switch off power supply	5 sec operation	
	Verify fully open microswitch indicates correct status of cover	OK	
	Reverse +ve and –ve power supply leads, allow mechanism to fully close cover and switch off power supply		
	Verify fully closed microswitch indicates correct status of cover	OK	
	Set power supply to 0 Volts and 0.~~5~~ 1.4 Amps		
	Reverse +ve and –ve power supply leads, switch on power supply	10.5V	
	Measure minimum operating drive voltage	✓	
	Switch off power supply, increase power supply voltage to 28 Volts, allow mechanism to fully open cover and switch off power supply		
	Verify fully closed microswitch indicates correct status of cover	OK	
	Set power supply to 0 Volts and 0.~~5~~ 1.4 Amps		
	Reverse +ve and –ve power supply leads and switch on power supply	2.4V TO INIATE ROTATION	
	Measure minimum operating drive voltage	5.8V TO FULLY CLOSE	
	After motor stalls at close position, determine voltage to initiate drive		
	Allow mechanism to fully close cover and switch off power supply	OK	
	Verify fully closed microswitch indicates correct status of cover	13-1-00	
4.3.2	**Hinge Drive Axis – horizontal configuration test**		
	(a) Motor A	✓	
	Set power supply to 28 Volts and 0.~~5~~ 0.4 Amps (using EGSE or manually)	OK	
	Switch on power supply, allow mechanism to fully open cover and switch off power supply		
	Verify fully open microswitch indicates correct status of cover	✓	
	Reverse +ve and –ve power supply leads, allow mechanism to fully close cover and switch off power supply	OK	
	Verify fully closed microswitch indicates correct status of cover		
	Set power supply to 0 Volts and 0.~~5~~ 1.4 Amps		

Para	Activity	Results	Comments
4.3.2	**Cont.**		
	Reverse +ve and –ve power supply leads	✓	
	Measure minimum operating drive voltage	10·1 V	
	Switch off power supply, increase power supply voltage to 28 Volts, allow mechanism to fully open cover and switch off power supply	✓	
	Verify fully ~~closed~~ open microswitch indicates correct status of cover	OK	
	Set power supply to 0 Volts and 0.~~5~~4 Amps KTSC	✓	
	Reverse +ve and –ve power supply leads and switch on power supply	2·3 V	
	Measure minimum operating drive voltage	9·1 V	
	After motor stalls at close position, determine voltage to initiate drive		
	Allow mechanism to fully close cover and switch off power supply		
	Verify fully closed microswitch indicates correct status of cover	OK	
	(b) Motor B 4 KTSC		
	Set power supply to 28 Volts and 0.~~5~~4 Amps (using EGSE or manually)	OK	
	Switch on power supply, allow mechanism to fully open cover and switch off power supply	✓ 5 sec.	
	Verify fully open microswitch indicates correct status of cover	OK	
	Reverse +ve and –ve power supply leads, allow mechanism to fully close cover and switch off power supply	✓	
	Verify fully closed microswitch indicates correct status of cover	OK	
	Set power supply to 0 Volts and 0.~~5~~4 Amps KTSC	✓	
	Reverse +ve and –ve power supply leads	✓	
	Measure minimum operating drive voltage	9.2 V	
	Switch off power supply, increase power supply voltage to 28 Volts, allow mechanism to fully open cover and switch off power supply	✓	
	Verify fully ~~closed~~ open microswitch indicates correct status of cover	✓	
	Set power supply to 0 Volts and 0.~~5~~4 Amps KTSC	✓	
	Reverse +ve and –ve power supply leads and switch on power supply	3 ✓	
	Measure minimum operating drive voltage		

Para	Activity	Results	Comments
4.3.2	**Cont.**		
	After motor stalls at close position, determine voltage to initiate drive	9.1V	
	Allow mechanism to fully close cover and switch off power supply		
	Verify fully closed microswitch indicates correct status of cover	OK	
		19-1-00	
4.5	**Post Vibration Function Test**		
	(a) Motor A .4 RSC MOTOR WINDING RESISTANCE	34Ω ✓ Pin 1 & 3	Additional resistance due to T.V. harness
	Set power supply to 28 Volts and 0.5 Amps (using EGSE or manually)	✓	
	Switch on power supply, allow mechanism to fully open cover and switch off power supply		
	Verify fully open microswitch indicates correct status of cover	OK	
	Reverse +ve and –ve power supply leads, allow mechanism to fully close cover and switch off power supply	✓	
	Verify fully closed microswitch indicates correct status of cover	OK	
	Set power supply to 0 Volts and 0.5 Amps RSC	✓	
	Reverse +ve and –ve power supply leads	✓	
	Measure minimum operating drive voltage	9.5V	
	Switch off power supply, increase power supply voltage to 28 Volts, allow mechanism to fully open cover and switch off power supply	✓	
	Verify fully ~~closed~~ open microswitch indicates correct status of cover	OK	
	Set power supply to 0 Volts and 0.5 Amps RSC	✓	
	Reverse +ve and –ve power supply leads and switch on power supply		
	Measure minimum operating drive voltage	2.4V	
	After motor stalls at close position, determine voltage to initiate drive	4.5V	
	Allow mechanism to fully close cover and switch off power supply @ 28V	✓	
	Verify fully closed microswitch indicates correct status of cover	OK	
	(b) Motor B .4 RSC MOTOR WINDING RESISTANCE	34.2Ω Pin 9 & 4	Increase resistance due to T.V. harness
	Set power supply to 28 Volts and 0.5 Amps (using EGSE or manually)		
	Switch on power supply, allow mechanism to fully open cover and switch off	✓	

Para	Activity	Results	Comments
4.5	**Cont.**		
	power supply		
	Verify fully open microswitch indicates correct status of cover	✓ OK	
	Reverse +ve and –ve power supply leads, allow mechanism to fully close cover and switch off power supply	✓	
	Verify fully closed microswitch indicates correct status of cover	OK	
	Set power supply to 0 Volts and 0.5 Amps KTSC		
	Reverse +ve and –ve power supply leads	9.5V	
	Measure minimum operating drive voltage	✓	
	Switch off power supply, increase power supply voltage to 28 Volts, allow mechanism to fully open cover and switch off power supply	OK	
	Verify fully ~~closed~~ open microswitch indicates correct status of cover		
	Set power supply to 0 Volts and 0.5 Amps KTSC		
	Reverse +ve and –ve power supply leads and switch on power supply	2.4V	
	Measure minimum operating drive voltage	5.3V ✓	
	After motor stalls at close position, determine voltage to initiate drive	OK.	
	Allow mechanism to fully close cover and switch off power supply		
	Verify fully closed microswitch indicates correct status of cover		
4.6	**Thermal Vacuum Test**		
(a)	**~~Prior~~ to pump down**		
	(a) Motor A .4 KTSC		
	Set power supply to 28 Volts and 0.5 Amps (using EGSE or manually)	Post Vibration Function performed in T.V chamber and 4.6a test is not required KTSC 19-1-00	
	Switch on power supply		
	Allow mechanism to fully open cover and switch off power supply		
	Verify fully open microswitch indicates correct status of cover		
	Reverse +ve and –ve power supply leads and switch on power supply		
	Allow mechanism to fully close cover and switch off power supply		
	Verify fully closed microswitch indicates correct status of cover		
	Set power supply to 0 Volts and 0.5 Amps .4 KTSC		

Para	Activity	Results	Comments
4.6	**Cont.** Reverse +ve and –ve power supply leads and switch on power supply **Measure minimum operating drive voltage** Switch off power, increase voltage to 28 Volts, switch on power supply Allow mechanism to fully open cover and switch off power supply **Verify fully open microswitch indicates correct status of cover** Set power supply to 0 Volts and 0.5 Amps 1/4 RTSC Reverse +ve and –ve power supply leads and switch on power supply **Measure minimum operating drive voltage** After cover rotates to close position and stalls, gradually increase power supply voltage until drive starts to rotate (Record voltage) Allow mechanism to fully close cover and switch off power supply **Verify fully closed microswitch indicates correct status of cover** **(b) Motor B** Set power supply to 28 Volts and 0.5 Amps (using EGSE or manually) Switch on power supply Allow mechanism to fully open cover and switch off power supply **Verify fully open microswitch indicates correct status of cover** Reverse +ve and –ve power supply leads and switch on power supply Allow mechanism to fully close cover and switch off power supply **Verify fully closed microswitch indicates correct status of cover** Set power supply to 0 Volts and 0.5 Amps 1/4 RTSC Reverse +ve and –ve power supply leads and switch on power supply **Measure minimum operating drive voltage** Switch off power, increase voltage to 28 Volts, switch on power supply Allow mechanism to fully open cover and switch off power supply **Verify fully open microswitch indicates correct status of cover** Set power supply to 0 Volts and 0.5 Amps 1/4 RTSC Reverse +ve and –ve power supply leads and switch on power supply		Test not required

Para	Activity	Results	Comments
4.6	**Cont.**		~~Test not required~~ Test not required
	Measure minimum operating drive voltage		
	After cover rotates to close position and stalls, gradually increase power supply voltage until drive starts to rotate (Record voltage)		
	Allow mechanism to fully close cover and switch off power supply		
	Verify fully closed microswitch indicates correct status of cover		
		20-1-00	
(b)	**After cold temperature soak at -25°C**		
	(a) Motor A ·4 RTSC		
	Set power supply to 28 Volts and 0.5 Amps (using EGSE or manually)	✓	
	Switch on power supply		
	Allow mechanism to fully open cover and switch off power supply	OK	
	Verify fully open microswitch indicates correct status of cover	OK	
	Reverse +ve and –ve power supply leads and switch on power supply	✓	
	Allow mechanism to fully close cover and switch off power supply		
	Verify fully closed microswitch indicates correct status of cover	OK	
	Set power supply to 0 Volts and 0.5 Amps ·4 RTSC		
	Reverse +ve and –ve power supply leads and switch on power supply	✓	
	Measure minimum operating drive voltage		
	Switch off power, increase voltage to 28 Volts, switch on power supply	9.8 ✓	
	Allow mechanism to fully open cover and switch off power supply	✓	
	Verify fully open microswitch indicates correct status of cover		
	Set power supply to 0 Volts and 0.5 Amps ·4 RTSC	OK.	
	Reverse +ve and –ve power supply leads and switch on power supply	✓	
	Measure minimum operating drive voltage		
	After cover rotates to close position and stalls, gradually increase power supply voltage until drive starts to rotate (Record voltage)	2.5V	
	Allow mechanism to fully close cover and switch off power supply	MICROSWITCH OPERATES AT 8V	
	Verify fully closed microswitch indicates correct status of cover	OK.	

Para	Activity	Results	Comments
4.6	**Cont.**		
	(b) Motor B .4 RTSC		
	Set power supply to 28 Volts and ~~0.5~~ Amps (using EGSE or manually)	✓	
	Switch on power supply	✓	
	Allow mechanism to fully open cover and switch off power supply	✓	
	Verify fully open microswitch indicates correct status of cover	OK.	
	Reverse +ve and –ve power supply leads and switch on power supply	✓	
	Allow mechanism to fully close cover and switch off power supply	✓	
	Verify fully closed microswitch indicates correct status of cover	OK	
	Set power supply to 0 Volts and ~~0.5~~ .4 Amps RTSC	✓	
	Reverse +ve and –ve power supply leads and switch on power supply	✓	
	Measure minimum operating drive voltage	10.5✓	
	Switch off power, increase voltage to 28 Volts, switch on power supply	✓	
	Allow mechanism to fully open cover and switch off power supply	OK	
	Verify fully open microswitch indicates correct status of cover		
	Set power supply to 0 Volts and ~~0.5~~ .4 Amps RTSC	✓	
	Reverse +ve and –ve power supply leads and switch on power supply		
	Measure minimum operating drive voltage	4✓	
	After cover rotates to close position and stalls, gradually increase power supply voltage until drive starts to rotate (Record voltage)	MICROSWITCH OPERATES AT 10V	
	Allow mechanism to fully close cover and switch off power supply		
	Verify fully closed microswitch indicates correct status of cover	OK	
(c)	**After raising temperature to 25°C** 21/1/00		
	(a) Motor A RTSC		
	Set power supply to 28 Volts and ~~0.5~~ Amps (using EGSE or manually)	✓	
	Switch on power supply	✓	
	Allow mechanism to fully open cover and switch off power supply		
	Verify fully open microswitch indicates correct status of cover	OK	
	Reverse +ve and –ve power supply leads and switch on power supply	✓	

Para	Activity	Results	Comments
4.6	**Cont.**		
	Allow mechanism to fully close cover and switch off power supply	✓	
	Verify fully closed microswitch indicates correct status of cover	OK.	
	Set power supply to 0 Volts and 0.~~5~~ Amps 4 RTSC		
	Reverse +ve and –ve power supply leads and switch on power supply	✓	
	Measure minimum operating drive voltage		
	Switch off power, increase voltage to 28 Volts, switch on power supply	MICROSWITCH OPERATES AT 11.5V	
	Allow mechanism to fully open cover and switch off power supply	✓	
	Verify fully open microswitch indicates correct status of cover	OK	
	Set power supply to 0 Volts and 0.~~5~~ Amps RTSC		
	Reverse +ve and –ve power supply leads and switch on power supply	✓	
	Measure minimum operating drive voltage	MICROSWITCH	OPERATES AT 2.8V
	After cover rotates to close position and stalls, gradually increase power supply voltage until drive starts to rotate (Record voltage)	MICROSWITCH	OPERATES AT 6.4V
	Allow mechanism to fully close cover and switch off power supply	✓	
	Verify fully closed microswitch indicates correct status of cover	OK.	
	(b) Motor B 4 RTSC		
	Set power supply to 28 Volts and 0.~~5~~ Amps (using EGSE or manually)	✓	
	Switch on power supply		
	Allow mechanism to fully open cover and switch off power supply	✓	
	Verify fully open microswitch indicates correct status of cover	OK.	
	Reverse +ve and –ve power supply leads and switch on power supply	✓	
	Allow mechanism to fully close cover and switch off power supply	✓	
	Verify fully closed microswitch indicates correct status of cover	OK	
	Set power supply to 0 Volts and 0.~~5~~ 14 Amps RTSC	✓	
	Reverse +ve and –ve power supply leads and switch on power supply	✓	
	Measure minimum operating drive voltage	MICROSWITCH	OPERATES AT 9.8V
	Switch off power, increase voltage to 28 Volts, switch on power supply	✓	
	Allow mechanism to fully open cover and switch off power supply	✓	

Para	Activity	Results	Comments
4.6	**Cont.**		
	Verify fully open microswitch indicates correct status of cover	OK	
	Set power supply to 0 Volts and 0.~~5~~ 4 Amps RTSC	✓	
	Reverse +ve and –ve power supply leads and switch on power supply	✓	
	Measure minimum operating drive voltage	MICROSWITCH	OPERATES AT 4V.
	After cover rotates to close position and stalls, gradually increase power supply voltage until drive starts to rotate (Record voltage)	MICROSWITCH	OPERATES AT 6.8 V
	Allow mechanism to fully close cover and switch off power supply	✓	
	Verify fully closed microswitch indicates correct status of cover	OK.	
(d)	**At ambient after completion of 4 cycles** 24/1/00		
	(a) Motor A .4 RTSC CHECK MOTOR WINDING RESISTANCE	33.6 Ω	
	Set power supply to 28 Volts and 0.~~5~~ 4 Amps (using EGSE or manually) RTSC	✓	
	Switch on power supply		
	Allow mechanism to fully open cover and switch off power supply	✓	
	Verify fully open microswitch indicates correct status of cover	OK	
	Reverse +ve and –ve power supply leads and switch on power supply	✓	
	Allow mechanism to fully close cover and switch off power supply	✓	
	Verify fully closed microswitch indicates correct status of cover	✓OK	
	Set power supply to 0 Volts and 0.~~5~~ 4 Amps .4 RTSC	✓	
	Reverse +ve and –ve power supply leads and switch on power supply		
	Measure minimum operating drive voltage	MICROSWITCH OPERATES AT 11.5 V	
	Switch off power, increase voltage to 28 Volts, switch on power supply	✓	
	Allow mechanism to fully open cover and switch off power supply	✓	
	Verify fully open microswitch indicates correct status of cover		SEE NXR.
	Set power supply to 0 Volts and 0.~~5~~ 4 Amps RTSC	✓ 25/1/00	
	Reverse +ve and –ve power supply leads and switch on power supply	✓	
	Measure minimum operating drive voltage	2✓	
	After cover rotates to close position and stalls, gradually increase power supply voltage until drive starts to rotate (Record voltage)	5.8 ✓	

Para	Activity	Results	Comments
4.6	**Cont.**		
	Allow mechanism to fully close cover and switch off power supply	✓	
	Verify fully closed microswitch indicates correct status of cover	OK.	
	(b) Motor B .4 Rise Check motor winding resistance		
	Set power supply to 28 Volts and 0.5 Amps (using EGSE or manually) .4 Rise	✓	
	Switch on power supply		
	Allow mechanism to fully open cover and switch off power supply	✓	
	Verify fully open microswitch indicates correct status of cover	OK.	
	Reverse +ve and –ve power supply leads and switch on power supply	✓	
	Allow mechanism to fully close cover and switch off power supply	✓	
	Verify fully closed microswitch indicates correct status of cover	OK	
	Set power supply to 0 Volts and 0.5 Amps .4 Rise	✓	
	Reverse +ve and –ve power supply leads and switch on power supply	✓	
	Measure minimum operating drive voltage	10 ✓	
	Switch off power, increase voltage to 28 Volts, switch on power supply	✓	
	Allow mechanism to fully open cover and switch off power supply	✓	
	Verify fully open microswitch indicates correct status of cover	OK.	
	Set power supply to 0 Volts and 0.5 Amps .4 Rise	~~[illegible]~~ ✓	
	Reverse +ve and –ve power supply leads and switch on power supply	✓	
	Measure minimum operating drive voltage	2.6✓	
	After cover rotates to close position and stalls, gradually increase power supply voltage until drive starts to rotate (Record voltage)	6.2✓	
	Allow mechanism to fully close cover and switch off power supply	✓	
	Verify fully closed microswitch indicates correct status of cover	OK.	

DISTRIBUTION LIST

INTERNAL	EXTERNAL
I K Stewart	N Morris (RAL)
R Coupe	
N Crossland	
S Yardley	

CHANGE RECORD

CHANGE NUMBER	CLASS	CHANGE DETAILS	ISSUE
3164-00306	-	First Issue	1
3164-00328	II	Change in test requirements	2
3164-00334	II	Change in thermal vacuum test cycles	3

Para	Activity	Results	Comments
4.5	**Cont.** power supply **Verify fully open microswitch indicates correct status of cover** Reverse +ve and –ve power supply leads, allow mechanism to fully close cover and switch off power supply **Verify fully closed microswitch indicates correct status of cover** Set power supply to 0 Volts and 0.5 Amps Reverse +ve and –ve power supply leads **Measure minimum operating drive voltage** Switch off power supply, increase power supply voltage to 28 Volts, allow mechanism to fully open cover and switch off power supply **Verify fully closed microswitch indicates correct status of cover** Set power supply to 0 Volts and 0.5 Amps Reverse +ve and –ve power supply leads and switch on power supply **Measure minimum operating drive voltage** **After motor stalls at close position, determine voltage to initiate drive** Allow mechanism to fully close cover and switch off power supply **Verify fully closed microswitch indicates correct status of cover**		25/1/00 RETEST COMMENCING AT 4.6 (a)
4.6 (a)	**<u>Thermal Vacuum Test</u>** 25/1/00 **Prior to pump down** **(a) Motor A** RESISTANCE 33.7 Ω Set power supply to 28 Volts and 0.5 Amps (using EGSE or manually) Switch on power supply Allow mechanism to fully open cover and switch off power supply **Verify fully open microswitch indicates correct status of cover** Reverse +ve and –ve power supply leads and switch on power supply Allow mechanism to fully close cover and switch off power supply **Verify fully closed microswitch indicates correct status of cover** Set power supply to 0 Volts and 0.5 Amps	✓ ✓ ✓ OK ✓ ✓ OK ✓	

Para	Activity	Results	Comments
4.6	**Cont.**		
	Reverse +ve and –ve power supply leads and switch on power supply	✓	
	Measure minimum operating drive voltage	9.3 V	(MICROSWITCH OPERATES)
	Switch off power, increase voltage to 28 Volts, switch on power supply	✓	
	Allow mechanism to fully open cover and switch off power supply	✓	
	Verify fully open microswitch indicates correct status of cover	OK	
	Set power supply to 0 Volts and 0.5 Amps	✓	
	Reverse +ve and –ve power supply leads and switch on power supply	✓	
	Measure minimum operating drive voltage	2 V	(MICROSWITCH OPERATES)
	After cover rotates to close position and stalls, gradually increase power supply voltage until drive starts to rotate (Record voltage)	6V	(MICROSWITCH OPERATES)
	Allow mechanism to fully close cover and switch off power supply	✓	
	Verify fully closed microswitch indicates correct status of cover	OK	
	(b) Motor B RESISTANCE 32.5 Ω		
	Set power supply to 28 Volts and 0.5 Amps (using EGSE or manually)	✓	
	Switch on power supply	✓	
	Allow mechanism to fully open cover and switch off power supply	✓	
	Verify fully open microswitch indicates correct status of cover	OK	
	Reverse +ve and –ve power supply leads and switch on power supply	✓	
	Allow mechanism to fully close cover and switch off power supply	✓	
	Verify fully closed microswitch indicates correct status of cover	OK	
	Set power supply to 0 Volts and 0.5 Amps	✓	
	Reverse +ve and –ve power supply leads and switch on power supply	✓	
	Measure minimum operating drive voltage	9.6 V	(MICROSWITCH OPERATES)
	Switch off power, increase voltage to 28 Volts, switch on power supply	✓	
	Allow mechanism to fully open cover and switch off power supply	✓	
	Verify fully open microswitch indicates correct status of cover	OK	
	Set power supply to 0 Volts and 0.5 Amps	✓	
	Reverse +ve and –ve power supply leads and switch on power supply	✓	

Para	Activity	Results	Comments
4.6	**Cont.**		
	Measure minimum operating drive voltage	2v (MICROSWITCH OPERATES)	
	After cover rotates to close position and stalls, gradually increase power supply voltage until drive starts to rotate (Record voltage)	6.8 v (MICROSWITCH OPERATES)	
	Allow mechanism to fully close cover and switch off power supply	✓	
	Verify fully closed microswitch indicates correct status of cover	OK	
(b)	**After cold temperature soak at -25°C** 26/1/00 RESISTANCE 30.Ω		
	(a) Motor A		
	Set power supply to 28 Volts and 0.5 Amps (using EGSE or manually)	✓	
	Switch on power supply	✓	
	Allow mechanism to fully open cover and switch off power supply	✓	
	Verify fully open microswitch indicates correct status of cover	OK	
	Reverse +ve and –ve power supply leads and switch on power supply	✓	
	Allow mechanism to fully close cover and switch off power supply	✓	
	Verify fully closed microswitch indicates correct status of cover	OK	
	Set power supply to 0 Volts and 0.5 Amps	✓	
	Reverse +ve and –ve power supply leads and switch on power supply	✓	
	Measure minimum operating drive voltage	11.8V (MICROSWITCH OPERATES)	
	Switch off power, increase voltage to 28 Volts, switch on power supply	✓	
	Allow mechanism to fully open cover and switch off power supply	✓	
	Verify fully open microswitch indicates correct status of cover	OK	
	Set power supply to 0 Volts and 0.5 Amps	✓	
	Reverse +ve and –ve power supply leads and switch on power supply	✓	
	Measure minimum operating drive voltage	3.2V (MICROSWITCH OPERATES)	
	After cover rotates to close position and stalls, gradually increase power supply voltage until drive starts to rotate (Record voltage)	6.8V (MICROSWITCH OPERATES)	
	Allow mechanism to fully close cover and switch off power supply	✓	
	Verify fully closed microswitch indicates correct status of cover	OK.	

Para	Activity	Results	Comments
4.6	**Cont.**		
	(b) Motor B RESISTANCE 29.6 Ω		
	Set power supply to 28 Volts and 0.5 Amps (using EGSE or manually)	✓	
	Switch on power supply	✓	
	Allow mechanism to fully open cover and switch off power supply	✓	
	Verify fully open microswitch indicates correct status of cover	OK	
	Reverse +ve and –ve power supply leads and switch on power supply	✓	
	Allow mechanism to fully close cover and switch off power supply	✓	
	Verify fully closed microswitch indicates correct status of cover	OK	
	Set power supply to 0 Volts and 0.5 Amps	✓	
	Reverse +ve and –ve power supply leads and switch on power supply	✓	
	Measure minimum operating drive voltage	11.8 V (MICROSWITCH OPERATES)	
	Switch off power, increase voltage to 28 Volts, switch on power supply	✓	
	Allow mechanism to fully open cover and switch off power supply	✓	
	Verify fully open microswitch indicates correct status of cover	OK	
	Set power supply to 0 Volts and 0.5 Amps	✓	
	Reverse +ve and –ve power supply leads and switch on power supply	✓	
	Measure minimum operating drive voltage	3.5 V (MICROSWITCH OPERATES)	
	After cover rotates to close position and stalls, gradually increase power supply voltage until drive starts to rotate (Record voltage)	6.8 V (MICROSWITCH OPERATES)	
	Allow mechanism to fully close cover and switch off power supply	✓	
	Verify fully closed microswitch indicates correct status of cover	OK	
(c)	**After raising temperature to 25°C** 27/1/00		
	(a) Motor A RESISTANCE 33.8 Ω		
	Set power supply to 28 Volts and 0.5 Amps (using EGSE or manually)	✓	
	Switch on power supply	✓	
	Allow mechanism to fully open cover and switch off power supply	✓	
	Verify fully open microswitch indicates correct status of cover	OK	
	Reverse +ve and –ve power supply leads and switch on power supply	✓	

Para	Activity	Results	Comments
4.6	**Cont.**		
	Allow mechanism to fully close cover and switch off power supply	✓	
	Verify fully closed microswitch indicates correct status of cover	OK	
	Set power supply to 0 Volts and 0.5 Amps	✓	
	Reverse +ve and –ve power supply leads and switch on power supply	✓	
	Measure minimum operating drive voltage	11.5V	(MICROSWITCH OPERATES)
	Switch off power, increase voltage to 28 Volts, switch on power supply	✓	
	Allow mechanism to fully open cover and switch off power supply	✓	
	Verify fully open microswitch indicates correct status of cover	OK	
	Set power supply to 0 Volts and 0.5 Amps	✓	
	Reverse +ve and –ve power supply leads and switch on power supply	✓	
	Measure minimum operating drive voltage	3.5V	(MICROSWITCH OPERATES)
	After cover rotates to close position and stalls, gradually increase power supply voltage until drive starts to rotate (Record voltage)	✓ 8V	(MICROSWITCH OPERATES)
	Allow mechanism to fully close cover and switch off power supply	✓	
	Verify fully closed microswitch indicates correct status of cover	OK	
	(b) Motor B RESISTANCE 32.5 Ω		
	Set power supply to 28 Volts and 0.5 Amps (using EGSE or manually)	✓	
	Switch on power supply	✓	
	Allow mechanism to fully open cover and switch off power supply	✓	
	Verify fully open microswitch indicates correct status of cover	OK	
	Reverse +ve and –ve power supply leads and switch on power supply	✓	
	Allow mechanism to fully close cover and switch off power supply	✓	
	Verify fully closed microswitch indicates correct status of cover	OK	
	Set power supply to 0 Volts and 0.5 Amps	✓	
	Reverse +ve and –ve power supply leads and switch on power supply	✓	
	Measure minimum operating drive voltage	11.5V	(MICROSWITCH OPERATES)
	Switch off power, increase voltage to 28 Volts, switch on power supply	✓	
	Allow mechanism to fully open cover and switch off power supply	✓	

Para	Activity	Results	Comments
4.6	**Cont.**		
	Verify fully open microswitch indicates correct status of cover	OK	
	Set power supply to 0 Volts and 0.5 Amps	✓	
	Reverse +ve and –ve power supply leads and switch on power supply	✓	
	Measure minimum operating drive voltage	3.5v (MICROSWITCH OPERATES)	
	After cover rotates to close position and stalls, gradually increase power supply voltage until drive starts to rotate (Record voltage)	✓ 7.8 v (MICROSWITCH OPERATES)	
	Allow mechanism to fully close cover and switch off power supply	✓	
	Verify fully closed microswitch indicates correct status of cover	OK	
(d)	**At ambient after completion of 4 cycles** 30/1/00		
	(a) Motor A RESISTANCE 33.6 Ω		
	Set power supply to 28 Volts and 0.5 Amps (using EGSE or manually)	✓	
	Switch on power supply	✓	
	Allow mechanism to fully open cover and switch off power supply	✓	
	Verify fully open microswitch indicates correct status of cover	OK	
	Reverse +ve and –ve power supply leads and switch on power supply	✓	
	Allow mechanism to fully close cover and switch off power supply	✓	
	Verify fully closed microswitch indicates correct status of cover	OK	
	Set power supply to 0 Volts and 0.5 Amps	✓	
	Reverse +ve and –ve power supply leads and switch on power supply	✓	
	Measure minimum operating drive voltage	9.8 v (MICROSWITCH OPERATES)	
	Switch off power, increase voltage to 28 Volts, switch on power supply	✓	
	Allow mechanism to fully open cover and switch off power supply	✓	
	Verify fully open microswitch indicates correct status of cover	OK	
	Set power supply to 0 Volts and 0.5 Amps	✓	
	Reverse +ve and –ve power supply leads and switch on power supply	✓	
	Measure minimum operating drive voltage	3 v (MICROSWITCH OPERATES)	
	After cover rotates to close position and stalls, gradually increase power supply voltage until drive starts to rotate (Record voltage)	6.4 v (MICROSWITCH OPERATES)	

Para	Activity	Results	Comments
4.6	**Cont.**		
	Allow mechanism to fully close cover and switch off power supply	✓	
	Verify fully closed microswitch indicates correct status of cover	OK	
	(b) Motor B RESISTANCE 33.3Ω		
	Set power supply to 28 Volts and 0.5 Amps (using EGSE or manually)	✓	
	Switch on power supply	✓	
	Allow mechanism to fully open cover and switch off power supply	✓	
	Verify fully open microswitch indicates correct status of cover	OK	
	Reverse +ve and –ve power supply leads and switch on power supply	✓	
	Allow mechanism to fully close cover and switch off power supply	✓	
	Verify fully closed microswitch indicates correct status of cover	OK	
	Set power supply to 0 Volts and 0.5 Amps	✓	
	Reverse +ve and –ve power supply leads and switch on power supply	✓	
	Measure minimum operating drive voltage	10V (MICROSWITCH OPERATES)	
	Switch off power, increase voltage to 28 Volts, switch on power supply	✓	
	Allow mechanism to fully open cover and switch off power supply	✓	
	Verify fully open microswitch indicates correct status of cover	OK	
	Set power supply to 0 Volts and 0.5 Amps	✓	
	Reverse +ve and –ve power supply leads and switch on power supply	✓	
	Measure minimum operating drive voltage	3V (MICROSWITCH OPERATES)	
	After cover rotates to close position and stalls, gradually increase power supply voltage until drive starts to rotate (Record voltage)	6.8 V (MICROSWITCH OPERATES)	
	Allow mechanism to fully close cover and switch off power supply	✓	
	Verify fully closed microswitch indicates correct status of cover	OK.	

DISTRIBUTION LIST

INTERNAL	EXTERNAL
I K Stewart	N Morris (RAL)
R Coupe	
N Crossland	
S Yardley	

CHANGE RECORD

CHANGE NUMBER	CLASS	CHANGE DETAILS	ISSUE
3164-00306	-	First Issue	1
3164-00328	II	Change in test requirements	2
3164-	II	Change in thermal vacuum test cycles	3

SECTION 4

Test Event Log
Vibration Testing

EVT PORTSMOUTH

Matra Marconi Space

Test Request Form

NAMAS TESTING No. 0093

	Job No: IL	2712.
Name of Unit	**Type/Drg and Issue No.**	**Unit Serial No.**
Space View Aperture Assy	HR2L040 Issue 05	FM001
Manufacturer	**Resource – Project / Customer**	**Project / Charge No.**
MMS	HIRDLS Project	17143 743002
Test Specification / Issue	**Batch Ref. No.**	**Static Sensitive**
3164-SA028-TPF Issue 3 (TP-MMS-451)	AIT0182080	Yes ✓ / No
Type of Test	**Functional Testing**	**Occurrence Report procedure (yes / no)**
Eng. Development	Before / After ✓	
Qual/Design Approval	During EVT	yes
Protoflight	To be done by	
Acceptance / Flight ✓	AIT	
Special		

Additional Information (timescales, special conditions etc.)

Perform vibration testing in 3 axes in accordance with Section 4.5 of Test Procedure referred to above.

Vibration fixture (TAA2203) is currently held by EVT. Jig interface is compatible with small (2" pitch) vibrator.

Unit is currently being built and will require a some baseline functional testing prior to vibration. Realistic estimated start date is Wednesday 19th January.

AIT to supervise unit installation and turn-around between axes.

Estimated Hrs Allowed. 35 man hrs.

Project Manager (notify before testing)	**Quality Representative**	**Technical Liaison**
Ian Stewart	Dave Brewster	Nigel Crossland
Tel 4950	**Tel** 4633	**Tel** 5409
Test Requestor	**Accepted**	**Type of Report**
Nigel Crossland	pp SW Forster	Certified TRF / Test House Cert. ✓ / Full Report
	Lab Manager	
Date	**Date**	
5 January 2000	12 JAN 2000	

This job is now closed and records are available in the EVT logbook. All work carried out under the auspices of NAMAS accreditation held by this test house (0093).

Checked by	**Certified by**	
MMS 120 UK	R C Squires Lab Manager	
Date 24/1/00	**Date**	**Page 1 of** 1

Sheet Ref: E1

Job Ref No: [redacted] IL2712.

EQUIPMENT LOG SHEET

Equipment Description	Equipment Type	Serial Number	Calibration Recal Date	Date & Stamp
Controller	SD 1201	21618		
Controller	SD 1700 (Javelin)	29666		
Controller	SD 2552B(1)	2932-7764-01	9/3/00	
Controller	SD 2552B(2)	2932-7785		
				MMS 120 UK
Protector 1	TAP-1000	361		
Protector 2	TAP-1000	360		18/1/00
Data Analyser				
CDS1	M 6000	D 118002		
CDS2	EDASP 7610	68679	10/11/00	
Safety Accelerometer				
Ling L980	Endevco 226C			
Ling L964	Endevco 226C			
VP2500	Endevco 226C			
VP1200	Endevco 226C			
Tape Recorder	RACAL V Store	25368		
Strain Gauge Conditioning				
Power Supply	2110A	NSN		
Module 1	2120A	101720		
Module 2	2120A	116766		
Module 3	2120A	116345		
Module 4	2120A	116346		
Module 5	2120A	101773		

4. VIBRATION CHECK LIST

Immediately before running the vibrator, check the following:

1 Vibrator

a) Trunnion bolts TIGHT

2 Accelerometer

a) Leads to BOOM correct as per logbook
b) Lead connections TIGHT

3 Logbook

a) Vibrator ORIENTATION certified in Logbook
b) Vibration FIXTURE assembly TORQUE certified in logbook
c) UNIT assembly TORQUES recorded in logbook
c) Jig/unit DIAGRAM drawn in logbook
d) Accelerometer INSTALLATION certified in logbook

4 Charge Amplifiers

a) Boom to charge amplifier INPUTS correct as per logbook
b) Charge sensitivity RANGE correct as per logbook
c) Charge sensitivity SETTING (pC/g) correct as per logbook
d) Accelerometer SIGNAL GAIN (Mech units/volt) appropriate for the test level
e) TIME CONSTANT correct:
"medium" for < 10 pC/g
"short" for > 10 pC/g
f) Charge amplifiers CYCLED "operate - reset - operate"

6 Vibration Controller

a) Maximum OUTPUT VOLTAGE correct (100 mV normal)
b) TOLERANCE LINES as specified in test procedure
c) ABORT limits and lines appropriate
d) LOOP CHECK parameters OK
e) Controller SAFETY features OK
f) MILLIVOLTS per "g" the same as the Charge Amplifiers
g) Check program operation in "CLOSED LOOP"

7 Controller connections

a) CONTROL CHANNELS connected to controller inputs
b) Controller output to correct AMPLIFIER

8 Vibration Analyser

a) Charge amplifier to analyser LEADS correct as per logbook
b) Channel GAIN and IDENTIFICATIONS correct
c) TUNING LEAD from correct controller

9 Final

a) IF IN DOUBT GET SOMEONE ELSE TO CHECK
b) Stamp and date logbook "V.C.L.O.K" i.e. "Vibration Check List OK"

Sheet Ref: C 1

Job Ref:No: [redacted] IL2712.

CHANGE/ADDITIONS SHEET

Entry No	Change/Additions to Requirement	Authority	Name Signature & Date

Sheet Ref: C 2

Job Ref:No: [redacted] IL2712.

CHANGE/ADDITIONS SHEET

Entry No	Change/Additions to Requirement	Authority	Name Signature & Date

Sheet Ref: L1

Job Ref:No: [redacted] IL2712.

TEST LOG SHEET

Diag No	Table No	Notes and Results	CDS File	Stamp & Date
		Jig attached to L964 sliptable - see		
		DI, torqued to 5lbsft		
		Control accels stuck to jig		18/4/00

NCR No

Sheet Ref: L2

Job Ref:No: [redacted] IL2712.

TEST LOG SHEET

Specification No	Aspect	Environmental Conditions Required	Test Item S/No	Run No
	Y-Axis	SD2552B(1) SD5202 (mod)		
	L.L.Sine	±0.2g 5-2000Hz @ 2oct/min	Jig	1
	2pt aver cont	L964 (hori) Gain 6		
	100mV/g	V cc O.K. MMS 122 UK		
	Y-Axis	As run 1	FM001	2
	L.L.Sine			
	2pt aver cont			
	100mV/g	V cc O.K. MMS 122 UK		
	Y-Axis	As run 1	FM001	3
	L.L.Sine			
	2pt aver cont			
	100mV/g	V cc O.K. MMS 122 UK		

Sheet Ref: L3.

Job Ref:No: [redacted] IL 2712.

TEST LOG SHEET

Diag No	Table No	Notes and Results	CDS File	Stamp & Date
1	1			
		Sweep applied, plot taken of aver cont,	001.swp	
		all responses O.K.		18/11/00
		Unit installed on jig by AIT.		
		Unit instrumented as per fig 4.5-1 of		
		spec 3164-SA028-TPF, Issue 3.		
1	1			
		Sweep applied, plot taken of aver cont, all		
		responses O.K	002.swp	
		Comparison with EM001 shows ly main		
		resonance at 4.88Hz instead of 2 Hz on EM		
		Hence door of mechanism checked held closed		18/11/00
		with the correct force/voltage - all O.K.		
1	1			
		Sweep applied, plot taken of aver cont, all		
		responses O.K.	003.swp	
		Similar response to run 2.		22/11/00

NCR No

Sheet Ref: L4

Job Ref:No: [redacted] IL2712.

TEST LOG SHEET

Specification No	Aspect	Environmental Conditions Required	Test Item S/No	Run No
	YY Axis	SD2552B(1) SDR237		
	Accept R/N	20-160Hz @ 3dB/oct 160 ~~-250Hz~~ @ 0.08g²/Hz 7.4 grms	FM001	4
	2pt aver cont	~~500-2000Hz @~~ 250-2000Hz @ -3dB/oct 1 minute.		
	10mV/g	L964 (hori) Gain 7		
		V CLOK (MMS 120 UK)		
	YY Axis	As run 1	FM001	5
	L.L. Sine			
	2pt aver cont			
	100mV/g	V CLOK (MMS 120 UK)		
	XX Axis	As Run 1	FM001	6
	LL SINE			
	2pt AVE CONT			
	100mV/g	V CLOK (MMS 120 UK)		

Sheet Ref: L5

Job Ref:No: [redacted] IL2712.

TEST LOG SHEET

Diag No	Table No	Notes and Results	CDS File	Stamp & Date
1	1			
		60secs applied at full level of 7.409 grms,		
		plot taken of axis cont, all responses O.K.	001.spe	
		RANDOM PROFILE CALLED UP IN SPEC IS INCORRECT		18 MMS 120 UK
		O.R. RAISED TO CORRECT THIS - HR.NCR.00001.HUS.		
1	1	SWEEP APPLIED. PLOT TAKEN.	004.swp	
		DATA OK. RUNS 3 & 5 COMPARED.		
		POSITION 1 2 & 3 SHOW GENERAL		
		DROP IN FREQUENCY & REDUCTION IN		
		AMPLITUDE ie 490Hz TO 462Hz		
		& 720Hz TO 670Hz		MMS 120 UK
		UNIT INSPECTED & TORQUED CHECKED.		
		NOTHING ABNORMAL FOUND. THE ABOVE		18/1/00.
		CHANGE RECORDED ON N.C.R.		
		JIG ROTATED 90° FOR X AXIS, JIG		MMS 120 UK
		BOLTS TORQUED TO 5lbft		18/1/00.
2	1	SWEEP APPLIED. PLOT TAKEN	005.swp	
		DATA OK.		
		COMPARISON WITH EM001 SHOWS THE		18/1/00
		MAIN DOOR RESONANCE SEEN ON EM001		MMS 120 UK
		@ 650Hz APPROX IS NOW NO LONGER		
		THERE		

NCR No HR.NCR.00001.HUS

Sheet Ref: L4

Job Ref:No: [redacted] IL2712.

TEST LOG SHEET

Specification No	Aspect	Environmental Conditions Required	Test Item S/No	Run No
	XX Axis	As Run 4	FM001	7
	Accept Lin			
	20 Ave Cont	MMS 120 UK		
	10mVg	VCLOK		
	XX Axis	As Run 1	FM001	8
	LL Sine			
	20 Ave Cont			
	100mVg	VCLOK MMS 120 UK		
	ZZ Axis	As Run 1	FM001	9
	LL Sine	Except VP2500 Vent Gain 1½		
	20 Ave Cont			
	100mVg	VCLOK MMS 120 UK		
	ZZ Axis	As Run 4	FM001	10
	Accept Lin	Except VP2500 Vent Gain 4		
	20 Ave Cont			
	10mVg	VCLOK MMS 120 UK		

Sheet Ref: L7

Job Ref:No: [redacted] IL2712.

TEST LOG SHEET

Diag No	Table No	Notes and Results	CDS File	Stamp & Date
2	1	R/N APPLIED, PLOT TAKEN DATA	001.spe	
		ALL OK. 7.46grms.		MMS 120 UK 18/1/00
2	1	SWEEP APPLIED PLOT TAKEN	006.swp	
		RUNS 6 & 8 CONFIRMED		MMS 120 UK
		NO SIGNIFICANT CHANGES.		18/1/00
		JIG & UNIT MANUFACTURED TO		
		VPM500 FOR 2 AXIS JIG BOLTS		MMS 120 UK
		TORQUED TO 51bft		19/1/00
3	1			
		SWEEP APPLIED, PLOT TAKEN	007.swp	
		DATA OK		MMS 120 UK
				19/1/00
3	1	RANDOM APPLIED, PLOT TAKEN	003.spe	MMS 120 UK
		DATA OK.		19/1/00
		FULL LEVEL OF 7.47 grms.		

NCR No

Sheet Ref: L8

Job Ref:No: [redacted] IL2712.

TEST LOG SHEET

Specification No	Aspect	Environmental Conditions Required	Test Item S/No	Run No
	ZZ AXIS	As Run 9	FM001	11
	LL SINE			
	ZOT ≡ CONT			
	100mV/g	VCLOK		

MMS 120 UK

Sheet Ref: L 9

Job Ref:No: EL IL2712

TEST LOG SHEET

Diag No	Table No	Notes and Results	CDS File	Stamp & Date
3	1	SWEEP APPLIED PLOT TAKEN	00/SOP	
		DATA OK		
		PLOTS 9 & 11 COMPARED		MMS 120 UK
		NO SIGNIFICANT CHANGES.		19/1/00
		UNIT REMOVED FROM JIG		
		ALL WORK COMPLETE		
		T.H.C. EL 2712-1 RAISED		MMS 120 UK
		LOGBOOK MAY NOW BE CLOSED.		24/1/00

NCR No

Table Number	1									Job Number	IL27KF2
								Date	18-Jan-00	Stamp	

Accelerometers						Charge Amplifiers					
Pos.	Serial No	Sens pc/g	Cal due date	Type	Boom No	No	Serial No	Cal due date	mV/g *	CDS No	Remarks
101X	WR38	2.84	22-Oct-00	2220C	1	1	13749	07-Oct-00	10	201	+
101Y	VO97	2.76	22-Oct-00	2220C	2	2	29560	28-Jan-00	10	202	+
101Z	VQ51	2.77	22-Oct-00	2220C	3	3	13751	07-Oct-00	10	203	+
102Y	EL80	2.69	06-Jul-00	2220C	4	4	13735	10-Feb-00	10	204	+
102X	UM67	2.87	06-Jul-00	2220C	5	5	18614	06-Oct-00	10	205	–
102Z	UM71	2.87	06-Jul-00	2220C	6	6	28698	06-Jul-00	10	206	+
1X	XV56	2.95	04-Nov-00	2220C	7	7	13734	28-Jan-00	10	207	–
1Y	XV13	2.93	04-Nov-00	2220C	8	8	29559	27-Jan-00	10	208	+
1Z	XV19	2.9	27-Jan-00	2220C	9	9	13745	06-Jul-00	10	209	+
2X	DR08	2.76	17-Mar-00	2220C	10	10	25958	27-Jan-00	10	210	+
2Y	WR91	2.93	17-Mar-00	2220C	11	11	14359	12-Aug-00	10	211	+
2Z	WR74	2.97	17-Mar-00	2220C	12	12	13744	06-Jul-00	10	212	+
3X	AJDA9	1.4	05-Jul-00	2222C	13	13	156383	22-Oct-00	10	213	+
3Y	A70Y	1.56	09-Apr-00	2222C	14	14	55080	25-Mar-00	10	214	–
3Z	B82B	1.62	25-Oct-00	2222C	15	15	155276	26-Mar-00	10	215	+
4X	21758	1.36	21-Jun-00	2222C	16	16	155279	25-Mar-00	10	217	–
4Y	21801	1.35	11-Jun-00	2222C	17/19	17	469738	12-Jul-00	10	218	+
4Z	21620	1.37	21-Jun-00	2222C	18/20	18	55055	21-Oct-00	10	219	–

* L.L. Series 100mV/g

Sheet Ref: D1

Job Ref: IL 2712.

TEST CONFIGURATION DIAGRAM

Diag. No	Jig drawing/reference No:	Stamp & Date
1	Set Up For Vibn On 2964 Sliptable	18/1/00
2	SET UP ON 964 SLIPTABLE XY AXIS	MMS 120 UK 18/1/00

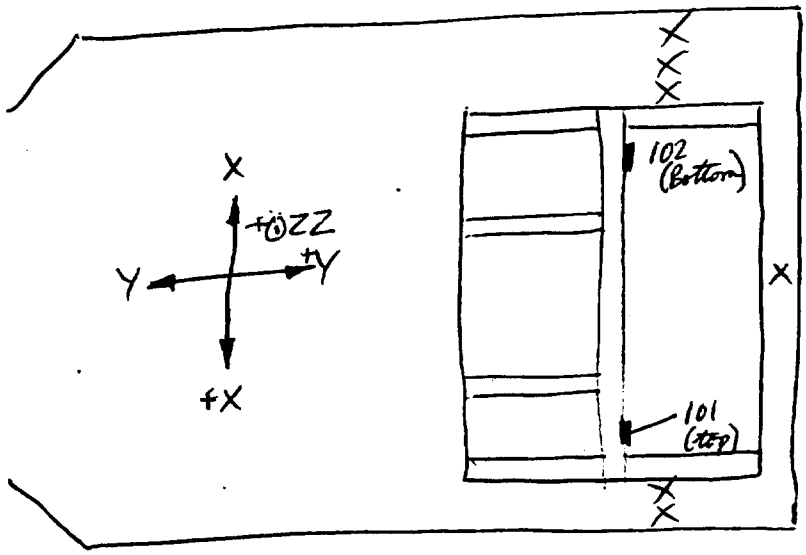

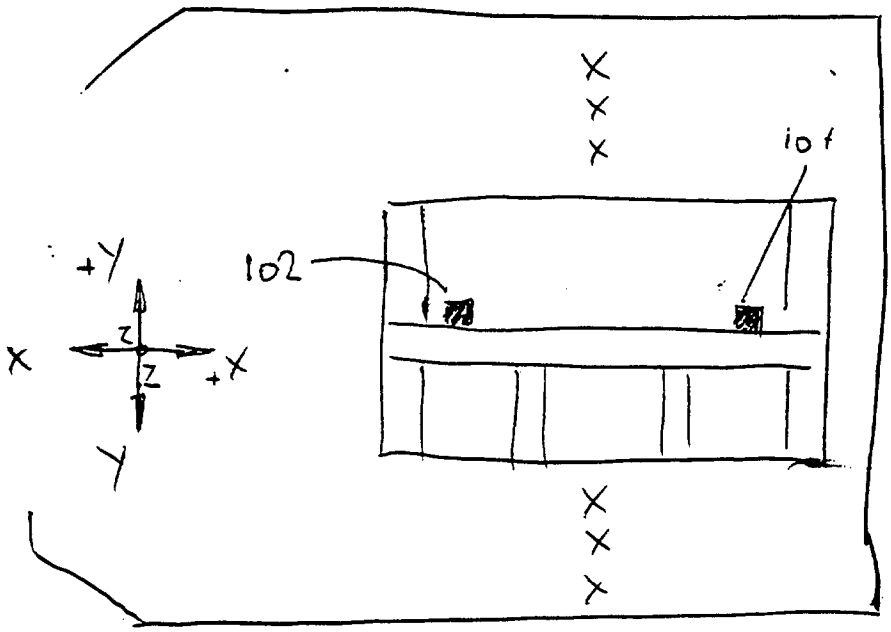

IMPORTANT Each diagram must clearly show:

1) Definition of Axes.
2) Location of accelerometers and their axes.
3) Vibration, Interface plates and Fixtures used.

Sheet Ref: D2

Job Ref: IL2712.

TEST CONFIGURATION DIAGRAM

Diag. No	Jig drawing/reference No:	Stamp & Date

3) SET UP ON VP2500 2 AXIS

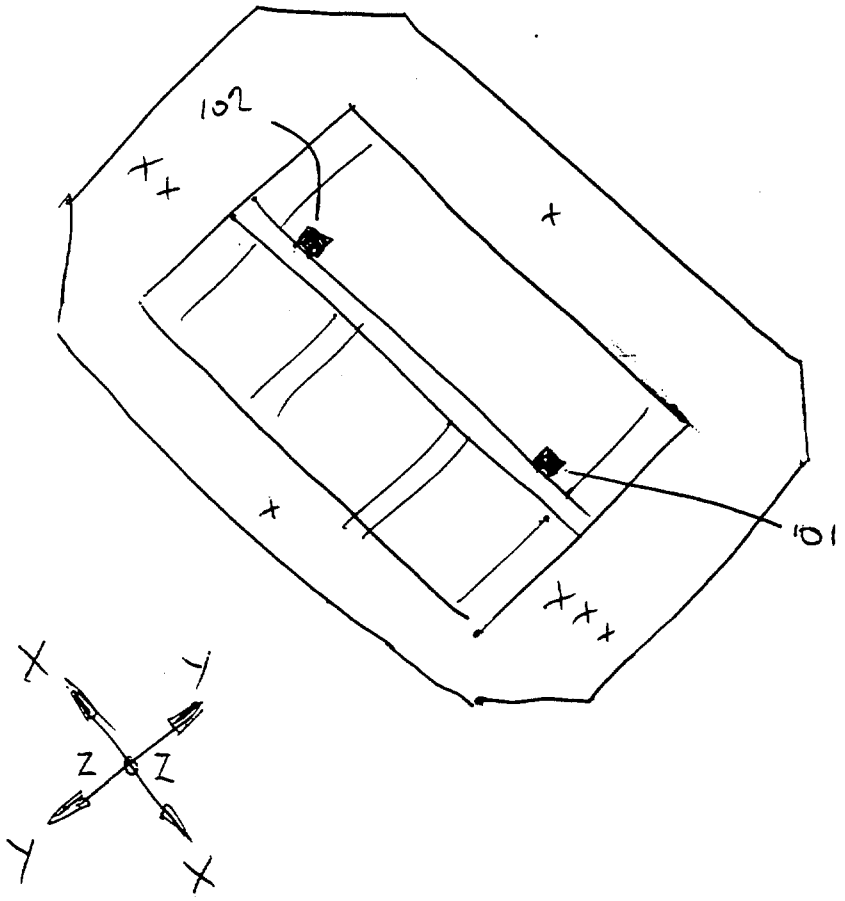

MMS 120 UK

19/1/00

IMPORTANT Each diagram must clearly show:

1) Definition of Axes.
2) Location of accelerometers and their axes.
3) Vibration, Interface plates and Fixtures used.

SECTION 4

Test Event Log
Thermal Vacuum Testing

FM SVA Thermal Vacuum Re-test Temperature Profile

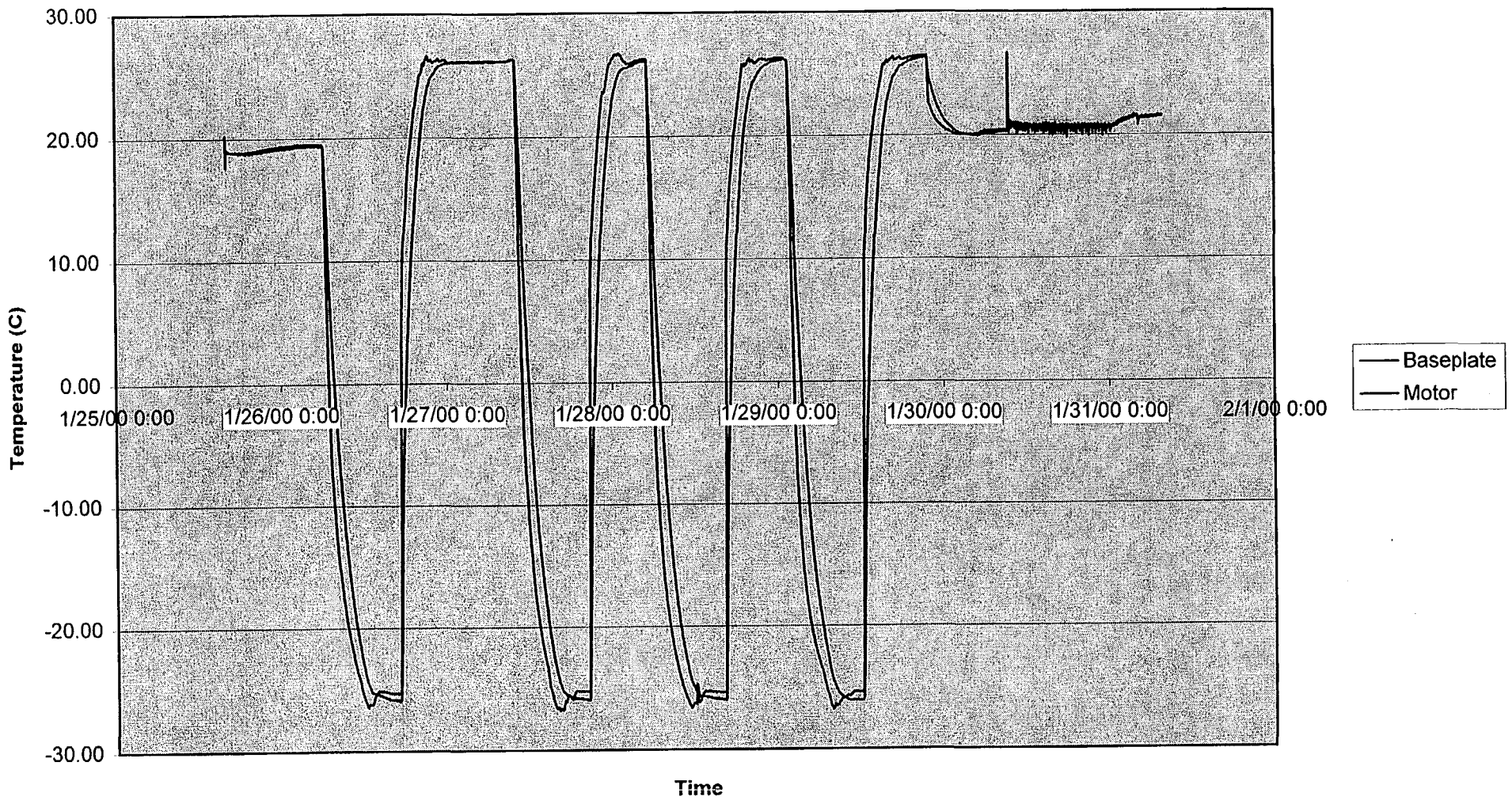

MATRA MARCONI SPACE UK

OCCURRENCE REPORT

PROJECT: HIRDLS

CHARGE No: 17143 113002

REF No: HRNCR00003M

DATE: 31/01/00

SHEET 1 of 7

DESCRIPTION: HIRDLS SVA

EIC:

FOUND DURING: TVTEST

MODEL: 01

ORIGINATOR NCR No:

DRG/SPEC No: HR2L040

ISSUE: 05

SOURCE CODE:

SUPPLIER: MMS

MANUFACTURER: MMS

TITLE: SPACE VIEW APERTURE ASSEMBLY

BATCH No: AIT01820800

SERIAL No: FM01

QTY RECEIVED:

QTY ACCEPTED:

SHORT DESCRIPTION OF OCCURRENCE: CURREJT LIMIT TRIP ON TV TEST

NON-CONFORMANCE REPORT		REWORK REQUEST		ANOMALY INVESTIGATION		STAMP/SIGN AND DATE ALL ENTRIES
PROV	CONFIRM	PROV	CONFIRM	PROV	CONFIRM	

DETAILS OF OCCURRENCE

Test TP-MMS-457 Iss 3 SVA THERMAL VACUUM ACCEPTANCE

AT END OF TEST (AMBIENT TEMP + VACUUM) ON THE SECOND DEPLOY OPERATION (WHERE MINIMUM VOLTAGE TO OPEN DOOR IS MEASURED). THE VOLTAGE WAS SLOWLY RAISED AND AT THE RECORDED VOLTAGE THE "CLOSED" MICROSWITCH INDICATED THE DOOR HAD LIFTED. AS PER PROCEDURE THE TEST STOPPED AND 28V (MAX VOLTAGE) WAS SELECTED FOR A FULL POWER OUT/OPEN. THE CURRENT LIMIT SETTING TRIPPED WITHOUT THE 'OPEN' MICROSWITCH MAKING.

FOLLOWING A CHECK OF CIRCUITS AND A MOTOR RESISTANCE CHECK – NO ANOMOLIES FOUND. DOOR WAS COMMANDED TO CLOSE – THIS IT DID AND 'CLOSED' MICROSWITCH MADE. DOOR WAS ONCE AGAIN COMMANDED TO OPEN AS PER PROCEDURE AND A REPEAT OF ABOVE WITH CURRENT TRIP WAS EXPERIENCED.

WITH NO VISIBILITY INSIDE CHAMBER TEST WAS HALTED AND AN OCCURRENCE REPORT RAISED.

I K STEWART 31/1/00

HARDWARE RECOVERY	ACCEPT PAR DATE	DEFINED RE DATE	COMPLETE QC DATE

FINAL COUNT	ACCEPT 1	REJECT –	SCRAP –	CONCESS –

LEVEL STATUS	REQUIREMENT MET	CLASS	MRB	ECR/EO	OFF LINE INVEST
N-1		MINOR			
N					
N+1					
N+2					

MODELS AFFECTED STATUS	PROJECT TECHNICAL CLOSURE: MODEL	ENGINEERING	PA
	MM		
	EM		
	QM		
	FM		OCS
	GS		
	SPARES		

DEFECT STATISTICS	A	B	C	D	E	F	G	H	J	K	L	M	N	P	Q	R	S	T	U	V	W	X	Y	Z

CLOSURE BY PA/QC:

SIGN: D. G. Brewster

DATE: 8/2/00

SS0242

MATRA MARCONI SPACE UK

OCCURRENCE REPORT

PROJECT:

CHARGE No:

REF No: HR NCR00003 M

DATE:

SHEET 1 of 2

DESCRIPTION: HIRDLS SVA

EIC

FOUND DURING:

MODEL

ORIGINATOR NCR No

DRG/SPEC No

ISSUE

SOURCE CODE:

SUPPLIER

TITLE:

MANUFACTURER

BATCH No

SERIAL No

QTY RECEIVED

QTY ACCEPTED

SHORT DESCRIPTION OF OCCURRENCE

NON-CONFORMANCE REPORT		REWORK REQUEST		ANOMALY INVESTIGATION		STAMP/SIGN AND DATE ALL ENTRIES
PROV	CONFIRM	PROV	CONFIRM	PROV	CONFIRM	

DETAILS OF OCCURRENCE

NOTE: CURRENT LIMIT WAS SET PURELY AS A SAFEGUARD TO PROTECT MOTORS – 0.5A HAD BEEN USED PREVIOUSLY BUT DUE TO DIFFICULT PROCUREMENT EXTRA SAFEGUARDS WERE ARTIFICIALLY INTRODUCED BY MMS AND 0.4A USED. THIS CURRENT LIMIT WAS NOT A TEST REQUIREMENT BUT AN IN-HOUSE SAFETY JET.

CHAMBER RECOVERED TO AMBIENT PRESSURE.

ATTACHED NOTES RECORD ACTIONS.

31/1/00

IK STEVAN

HARDWARE RECOVERY	ACCEPT PAR DATE	DEFINED RE DATE	COMPLETE QC DATE

FINAL COUNT	ACCEPT	REJECT	SCRAP	CONCESS

LEVEL STATUS	REQUIREMENT MET	CLASS	MRB	ECR/EO	OFF LINE INVEST
N-1					
N					
N+1					
N+2					

MODELS AFFECTED STATUS	PROJECT TECHNICAL CLOSURE		
	MODEL	ENGINEERING	PA
	MM		
	EM		
	QM		
	FM		
	GS		
	SPARES		

DEFECT STATISTICS	A	B	C	D	E	F	G	H	J	K	L	M	N	P	Q	R	S	T	U	V	W	X	Y	Z

CLOSURE BY PA/QC:

SIGN:

DATE:

550242

TV CHAMBER DOOR OPENED ONLY.
MICROSWITCH MANUALLY OPERATED.

3 of ✱ S. YARDLEY (1)
I. STEWART

S.V.A ANOMALY DIAGNOSIS CHECKS 25-1-00

VISUAL EXAMINATION SHOWS NO DEBRIS/DAMAGE (VIEW IN CHAMBER). 10-30 AM

1. CHECK OUT POWER SUPPLY ✓

VOLTAGE & CURRENT LIMIT

2 VERIFY OPEN LIMIT SWITCH OPERATES BY MANUALLY DEPRESSING LEVER. MONITOR 13 + 8 ✓OK

3. CHECK MOTOR WINDING RESISTANCES.

14 + 3 35 Ω ✓
9 + 4 34 Ω ✓

STATUS DOOR CLOSED, CLOSED STATUS SWITCH

4. OPEN DOOR. AMBIENT TEMP 22°C / AMBIENT PRESSURE 5 - 10 - OK ✓

CURRENT LIMIT = 0.4A
VOLTAGE = 15V.

+ve 3 -ve 14 PINS MONITORED

DOOR LIFTED / OPENED + MICROSWITCH SOUNDED OK ✓
SATISFACTORY OPERATION VISUALLY. ANOMOLY NOT REPEATED

5. MICROSWITCH CONTACTS INVESTIGATED
(DOOR OPENS WITH FORCE + COULD ROCK SET-UP)

MICROSWITCH SOUNDED +ve 3 -ve 14
CONTACT PLUG MANUALLY WAGGLED.
NO CHANGE IN MICROSWITCH SOUNDING.
CONTACTS GOOD.

6. STATUS DOOR FULLY OPEN MICROSWITCH ON (SOUNDING) ✓

CLOSE DOOR DVM ON 5 + 10
CURRENT LIMIT 0.4A
VOLTAGE 15v
MICROSWITCH CONFIRMS CLOSED ✓

FULLY DOWN USING 28V ✓

INSPECTION OF MICROSWITCH

No deterioration or debris was seen near microswitch.

Microswitch operated normally and no manipulation could make it not operate.

During the general SVA inspection it was noted that the drive pins on the lost motion drive could be clear of the locking release collar dogs and could have resulted in producing the reported operating fault.

ACTION

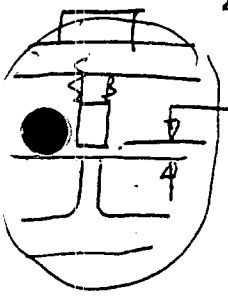

Measure clearance between bottom face of drive pins and top face of locking release collar dogs when cover is locked — 0·01 MM

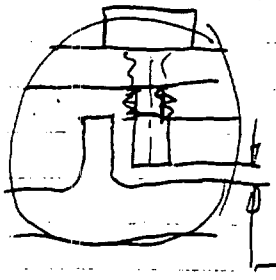

Measure clearance between bottom face of drive pin and rim face of locking collar when cover is open

Remove 0·25MM from under the head of the screw to allow further engagement of screw to prevent possibility of the faces locking and stopping the door opening

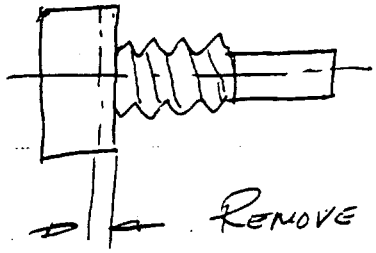

REMOVE 0.25MM OFF THIS FACE ✓

REFIT SCREW and verify clearances OK ✓
0.15 MM – 0.25MM

3 OPERATIONS PERFORMED FOR DIAGNOSTICS CHECKS ✓

RETURN TO TU TEST. TP-MMS-451 PARA 4.6

MATRA MARCONI SPACE UK

OCCURRENCE REPORT

PROJECT:

CHARGE No:

REF No: HR NCR 0 0 0 0 3 H

DATE:

SHEET 1 of 6 OF 27

DESCRIPTION

EIC

FOUND DURING:

MODEL

ORIGINATOR NCR No

DRG/SPEC No

ISSUE

SOURCE CODE:

SUPPLIER

TITLE:

MANUFACTURER

BATCH No

SERIAL No

QTY RECEIVED

QTY ACCEPTED

SHORT DESCRIPTION OF OCCURRENCE

NON-CONFORMANCE REPORT		REWORK REQUEST		ANOMALY INVESTIGATION		STAMP/SIGN AND DATE ALL ENTRIES
PROV	CONFIRM	PROV	CONFIRM	PROV	CONFIRM	

DETAILS OF OCCURRENCE

CONCLUSION:

ANOMOLY WAS NOT REPEATABLE BUT TWO ACTIONS TAKEN THAT DID NOT AFFECT BUILD OR TEST.

1) LENGTHED SCREW TO ENSURE NO POSSIBILITY OF A MECHANICAL STALL. (HOWEVER DESPITE HOLDING OR TAPING THE INTERFERENCE 'STALL' CONDITION – THE MOTOR DROVE THE INTERFERENCE TO CLEAR ITSELF. DUE TO THIS IT IS SEEN AS AN UNLIKELY EXPLANATION. (See Attached photo page 7.)

2) CURRENT LIMIT RAISED TO 0.5A. THE POSSIBILITY THAT 0.4A WAS TOO MARGINAL FOR SPIKES WAS FELT TO BE THE CASE. 0.5A IS THE PROCEDURAL AND PREVIOUSLY USED LIMIT. NOTE: THE ONLY REASON FOR LOWERING THE 0.5A WAS TO GIVE A GREATER ~~SAFETY~~ CONFIDENCE IN MOTOR PROTECTION WITH A TEST WHERE VISIBILITY IS NIL. (NOTE: DUE TO NIL VISIBILITY RAISING THE CURRENT LIMIT WITHOUT HALTING TEST WAS REJECTED). TEST REPEATED TO TP-445-451

TEST WAS SUCCESSFUL WITH NO ANOMOLY. – No further Action

I K Stewart 31/1/00 I K STEWART

HARDWARE RECOVERY	ACCEPT PAR DATE	DEFINED RE DATE	COMPLETE QC DATE

FINAL COUNT	ACCEPT	REJECT	SCRAP	CONCESS

LEVEL STATUS	REQUIREMENT MET	CLASS	MRB	ECR/EO	OFF LINE INVEST
N-1					
N					
N+1					
N+2					

MODELS AFFECTED STATUS	PROJECT TECHNICAL CLOSURE: MODEL	ENGINEERING	PA
	MM		
	EM		
	QM		
	FM		
	GS		
	SPARES		

DEFECT STATISTICS	A	B	C	D	E	F	G	H	J	K	L	M	N	P	Q	R	S	T	U	V	W	X	Y	Z

CLOSURE BY PA/QC:

SIGN:

DATE:

550242

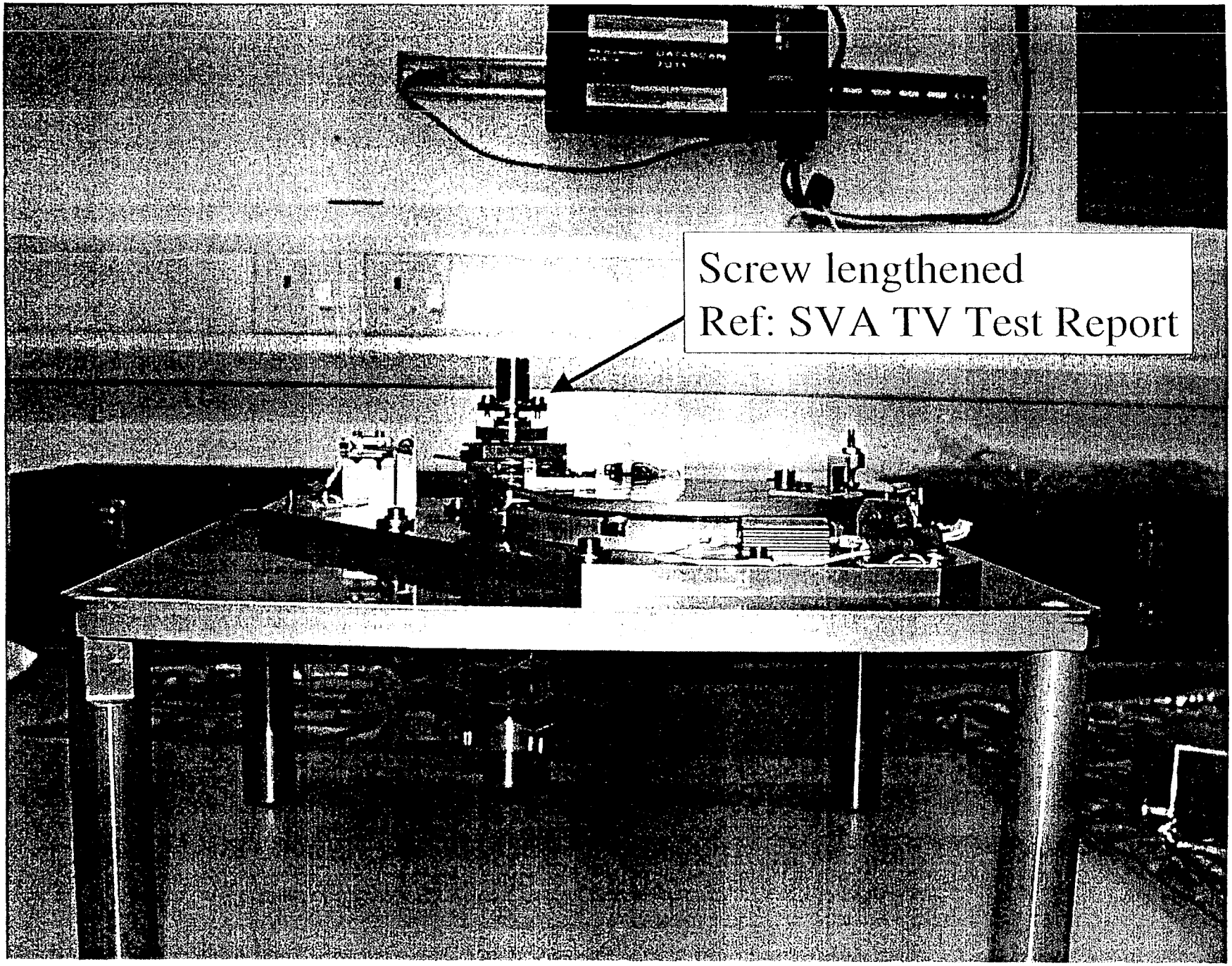

HRANCR00005 HMS

SECTION 4

Limited Life Log

SVA Operations Log Serial No. FM 001			
No. Operations	Activity	Engineer	Date
8	MANUAL OPERATIONS	KTSC	20-7-99
6	Preliminary Electrical Tests	KTSC	5-1-00
8	Baseline Functional Test	KTSC	5-1-00
4	Post Vibration Funct. Test	KTSC	19-1-00
4	Thermal-Vacuum @ -25°C	KTSC	20-1-00
4	" " " +25°C	KTSC	20-1-00
4	" " " AMBIENT	KTSC	24-1-00
4	Thermal-Vacuum @ AMBIENT	KTSC	25-1-00
4	" " @ -25°C	KTSC	26-1-00
4	" " @ +25°C	KTSC	27-1-00
4	" " @ AMBIENT.	KTSC	30-1-00

REPEAT TV TEST

Note 1 Operation = Open and Close

MATE / DEMATE LOG

Connector Savers have been used throughout the life of the SVA and hence, a Mate / Demate Log is not applicable.

SECTION 4

Contamination and Cleanliness Records

Matra Marconi Space U.K

Cleaning Log Sheet

H.I.R.D.L.S Space View Albedo
HR2L 040, Issue 5

All items are cleaned in accordance with 3164-SS070-PLP Issue A

B.O.M No	Part No	Issue	Description	Stamp	Date
1	HR2L 004	01	Motor Assembly	S.	7/6/99
2	HR2L 008	04	+Y Mounting Panel	S.	7/6/99
3	HR2L 034	02	Cover	S.	23/6/99
4	HR2L 010	01	Mounting Bracket	S.	7/6/99
5	HR2L 011	01	Mounting Bracket	S.	7/6/99
6	HR2L 012	01	Mounting Bracket	S.	7/6/99
7	HR2L 013	01	Bracket	S.	7/6/99
8	HR2L 014	02	Screw Stop	S.	23/6/99
9	HR2L 015	01	Mounting Bracket	S.	7/6/99
10	HR2L 016	03	Mounting Flange	S.	7/6/99
11	HR2L 017	01	Drive Interface	S.	7/6/99
12	HR2L 018	01	Screw Special	S.	7/6/99
13	HR2L 019	01	Stop	S.	7/6/99
15	HR2L 021	01	Locking Sleeve	S.	7/6/99

16	HR2L 022	01	Spigot	S	7/6/99
17	HR2L 023	03	Housing	S	7/6/99
18	HR2L 024	02	Cover Guide	S	17/6/99
19	3164-SV007-20	01	Cover Spot	S	23/6/99
21	HR2L 057	02	Housing Torsion Spring	S	17/6/99
22	3164-SV006-20	02	Spring Support Housing	S	23/6/99
23	HR2L 058	02	Stop Spring	S	11/8/99
24	HR2l 025	03	Bracket (Connector)	S	7/6/99
25	HR2L 035	03	Mounting Bracket	S	10/6/99
26	HR2L 036	02	Albedo Shield	S	7/6/99
27	HR2L 027	01	Shim Set	S	7/6/99
28	HR2L 028	01	Special Bush	S	7/6/99
29	HR2L 029	01	Shim Pack	S	7/6/99
32	GIMS 424	01	Adapter Plate	S	7/6/99
35	HR2L 032	01	Washer Special	S	7/6/99
36	HR2L 033	01	Spacer	S	7/6/99
61	MSO 339	/	Nut	S	7/6/99
67	MD 50057	/	Gear Head	S	7/6/99
68	MF 50019	/	Bronze Nut	S	7/6/99
69	ML 50036	/	Bearing Flange	S	7/6/99

SECTION 5

Open Item Register

SECTION 5

No Open Items

SECTION 5

User Manuals SP-MMS-455, TC-MMS-400

HIRDLS

SP-MMS-455
(3164-SS090-MAI)
Issue 2

HIGH RESOLUTION DYNAMICS LIMB SOUNDER

Originator: N Crossland Date: 19 November, 1999

Subject/Title: **FM Structure Thermal Subsystem Assembly and Disassembly Handbook**

Description/Summary/Contents:

The purpose of this document is to define the following:-

a) The method for assembling and disassembling the component parts of the Flight Model (FM) Structure Assembly
b) The method for attaching the Space View Aperture, and Sunshield Door and Aperture Plate Assemblies to the FM structure

It is intended that the Customer and the Instrument Integrator shall use this document for the above purposes

The document is intended to address the minimum assembly and disassembly requirements for the FM Structure Thermal Subsystem only and is not intended to cover other subsystem unit integration requirements. The Instrument Integrator is responsible for STH and Unit integration.

Keywords: FM, STH, Assembly, Handbook

Purpose of this Document: Definition of FM Structure Assembly Instructions

Reviewed/Approved by:			
Date (yy-mm-dd):	99-12-02		

Matra Marconi Space
Anchorage Road
Portsmouth
Hampshire PO3 5PU
England

EOS

ORIGINAL WHEN RED

FM STRUCTURE THERMAL SUBSYSTEM ASSEMBLY AND DISASSEMBLY HANDBOOK

SP-MMS-455

Responsible Engineer: N Greenland Date: 30th Nov 1999

Quality Assurance: Date: 3-12-99

Project Manager: Date: 2 Dec 99

© MATRA MARCONI SPACE UK LIMITED

THE COPYRIGHT IN THIS DOCUMENT IS THE PROPERTY OF MATRA MARCONI SPACE UK LIMITED. This document is supplied by Matra Marconi Space UK Limited on the express terms that it is to be treated as confidential and that it may not be copied, used or disclosed to others for any purpose except as expressly authorised under the terms of Contract No N2A 3R 0386.

Any person, other than the authorised holder, who finds or otherwise obtains possession of the document, should post it, together with his/her name and address, to the Registry, Matra Marconi Space UK Limited, Anchorage Road, Portsmouth, England, PO3 5PU. Postage will be refunded.

CONTENTS

1. SCOPE 4

2. DOCUMENTS 5

2.1 APPLICABLE DOCUMENTS 5
2.2 REFERENCE DOCUMENTS 5
2.3 DRAWINGS 5

3. KIT OF PARTS 6

4. MECHANICAL GROUND SUPPORT EQUIPMENT (MGSE) 7

5. GENERAL ASSEMBLY INSTRUCTIONS 8

6 STH STRUCTURE ASSEMBLY PROCEDURE 9

6.1 ATTACHING THE +X OUTER PANEL (ITEM 3) 9
6.2 ATTACHING THE +Y OUTER PANEL (ITEM 6) 9
6.3 ATTACHING THE ELECTRONICS COMPARTMENT SUB-ASSEMBLY (ITEMS 2, 4, 9 AND 10) 9
6.4 ATTACHING THE MEZZANINE PANEL (ITEM 8) 10
6.5 ATTACHING THE -Y OUTER PANEL (ITEM 5) 10
6.6 ATTACHING THE SUNSHIELD SUPPORT PANEL (ITEM 12) 10
6.7 ATTACHING THE FIXED SUNSHIELD PANEL (ITEM 11) 11
6.8 ATTACHING THE +Y SUNSHIELD LIP (ITEM 7) 11

7. STH STRUCTURE DISASSEMBLY PROCEDURE 12

7.1 REMOVING THE SUNSHIELD LIPS 12
7.2 REMOVING THE FIXED SUNSHIELD AND SUNSHIELD SUPPORT PANEL 12
7.3 REMOVING THE -Y PANEL 12
7.4 REMOVING THE MEZZANINE PANEL 12
7.5 REMOVAL OF THE ELECTRONICS COMPARTMENT SUB-ASSEMBLY 13
7.6 REMOVING THE +Y OUTER PANEL 13
7.7 REMOVING THE +X OUTER PANEL 13

8 INTEGRATION OF THE SPACE VIEW APERTURE ASSEMBLY (SVA) 14

8.1 INTRODUCTION 14
8.2 ATTACHING THE SVA TO THE STRUCTURE. 14

9. INTEGRATION OF THE SUNSHIELD DOOR AND APERTURE PLATE ASSEMBLY 15

9.1 INTRODUCTION 15
9.2 ATTACHING THE SUNSHIELD APERTURE PLATE TO THE STRUCTURE 15

10. SHIM DETAILS 16

APPENDIX A INTEGRATION OF THE STH STRUCTURE ASSEMBLY 18
APPENDIX B INTEGRATION OF THE SPACE VIEW APERTURE ASSEMBLY 28
APPENDIX C INTEGRATION OF THE SUNSHIELD DOOR AND APERTURE PLATE ASSEMBLY 31
APPENDIX D SHIM DETAILS 34

DISTRIBUTION LIST 37
CHANGE RECORD 37

1. SCOPE

This document is intended to address the minimum assembly and disassembly requirements for the FM Structure Thermal Subsystem only and is not intended to cover other subsystem unit integration requirements. The Instrument Integrator is responsible for STH and Unit integration.

This handbook is applicable to the HIRDLS Flight Model (FM) Structure Thermal Subsystem Assembly.

It defines the instructions for ;

assembling and disassembling the component parts of the HIRDLS Structure Assembly,
integration of the Space View Aperture Assembly, and
integration of the Sunshield Door and Aperture Plate Assembly.

These three main assembly activities form a logical division of this handbook as follows:-

Sections 6, 7 and Appendix A -	Assembly and disassembly of the STH Structure Assembly
Section 8 and Appendix B -	Integration of the Space View Aperture Assembly
Section 9 and Appendix C -	Integration of the Sunshield Door and Aperture Plate Assembly

For integration of the Thermal Subsystem (BOM 3164-TH001-02-F), refer to Installation Handbook SP-MMS-471.

2. DOCUMENTS

The latest issue of the following documents is applicable at the date of issue of this document.

2.1 Applicable Documents

AD1	Structure/Thermal Subsystem Specification Document	SP-HIR-031
AD2	Sunshield Subsystem Specification Document	SP-HIR-050
AD3	Turnover Stand Assembly Instructions	TC-RAL-094
AD4	Turnover Stand Assembly Drawing	A0-KE-0124-380-01
AD5	Lifting Frame Assembly and Operating Instructions	TC-RAL-144
AD6	Lifting Frame Assembly Drawing	A0-KE-0124-100-00
AD7	Electrical Bonding Resistance Test Procedure	TP-MMS-335

2.2 Reference Documents

RD1	Internal Interface Control Document (System Section)	SP-HIR-200
RD2	Flight Model (FM) Structure Assembly Drawing Tree and List	DW-MMS-435
RD3	Flight Model (FM) Sunshield/HDA Assembly Drawing Tree and List	DW-MMS-436
RD4	Flight Model (FM) Space View Aperture Assembly Drawing Tree and List	DW-MMS-437

2.3 Drawings

DG1	Structure/Thermal Subsystem ICD	DW-MMS-254
DG2	Sunshield Subsystem ICD	DW-MMS-307
DG3	Space View Albedo Assembly ICD	DW-MMS-268
DG4	Structure/Thermal Subsystem General Assembly	DW-MMS-213

3. KIT OF PARTS

The following is the list of parts used for assembly of the Structure / Thermal Subsystem (3164-SS001-02-F).

ITEM NO.	PART NUMBER	DESCRIPTION	NO. OFF
100	3164-SX001-05-F	STRUCTURE ASSEMBLY	1
200	3164-ST001-05-F	THERMAL HARDWARE(1)	1
300	HR2L040	SPACE VIEW ALBEDO ASSEMBLY	1
400	HR1L100	SUNSHIELD & HDA ASSEMBLY	1
500	3164-SS031-05-F	STRUCTURE / THERMAL ASSEMBLY KIT	1

(1) Thermal Hardware comprises blanket pins and grounding studs which are incorporated on structure panels, i.e. they are not delivered as a separate item

TABLE 3-1 PARTS LISTING OF THE STRUCTURE / THERMAL SUBSYSTEM ASSEMBLY

The following is the list of parts used for assembly of the Structure Assembly (3164-SX001-05-F).

ITEM NO.	PART NUMBER	DESCRIPTION	NO. OFF
1	3164-SX002-05-F	BASEPLATE	1
2	3164-SX003-05-F	-X OUTER PANEL	1
3	3164-SX005-05-F	+X OUTER PANEL	1
4	3164-SX005-05-F	MID PANEL	1
5	3164-SX006-05-F	-Y OUTER PANEL	1
6	3164-SX007-05-F	+Y OUTER PANEL	1
7	3164-SX008-05-F	+Y SUNSHIELD LIP	1
8	3164-SX009-05-F	MEZZANINE PANEL	1
9	3164-SX010-05-F	ELECTRONICS SHELF	1
10	3164-SX012-05-F	EU TOP PANEL	1
11	3164-SX013-05-F	FIXED SUNSHIELD	1
12	3164-SX017-05-F	SUNSHIELD SUPPORT PANEL	1
13	3164-SX031-05-F	-X SUNSHIELD LIP	1
15	SF105-0001-019N	M4 x 0,7 TITANIUM TORX HEAD SCREW 14 LONG	136
16	SF105-0001-018N	M4 x 0,7 TITANIUM TORX HEAD SCREW 12 LONG	46
17	SF400-0001-006N	M4 STAINLESS STEEL WASHER	182

TABLE 3-2 PARTS LISTING OF THE STRUCTURE ASSEMBLY

4. MECHANICAL GROUND SUPPORT EQUIPMENT (MGSE)

4.1 All assembly, disassembly, and lifting operations performed during the Structure / Thermal Subsystem Assembly shall utilise the following support equipment.

HIRDLS Turnover Stand Assembly	Part No. A0-KE-0124-380-01
HIRDLS Lifting Frame Assembly	Part No. A0-KE-0124-100-00

4.2 Operating instructions are defined in both AD3 and AD5 respectively.

5. GENERAL ASSEMBLY INSTRUCTIONS

5.1 Due to the complexity of this assembly, it is advised that this procedure is thoroughly read and the assembly sequence fully understood, before any assembly or disassembly operations are undertaken.

5.2 Unless otherwise stated, loosely assemble the structure using torque values not to exceed 50% of the full value specified for panel fixings. Ensure that there is no distortion or twisting of the panels and that the structure is in a stress free state prior to the final torque being applied.

5.3 Tolerance on maximum torque values shall be ± 10% of applied torque up to a maximum tolerance of ± 0.1 Nm.

5.4 Gaps exceeding 0.05mm between cleat / panel interfaces, and mating panel edges should be shimmed prior to torquing the relevant fixings.

6. STH STRUCTURE ASSEMBLY PROCEDURE

Numbers in Brackets (x) refer to the item numbers shown in Table 3.1.

Appendix A1-1 shows an exploded view of the structures' component parts for clarification.

6.1 Attaching the +X Outer panel (Item 3)

6.1.1 Appendix A1-2 shows the minimum build requirement for attaching the +X Outer Panel.

6.1.2 Assemble the +X Outer Panel (3) to the Baseplate (1) using 8 off screws (15) and 8 off washers (17). Torque fixings to 6.0 Nm. Refer to Section 5.2 prior to fitting the panel.

6.1.3 Attach the grounding straps to the grounding points between the +X Outer Panel and Baseplate grounding studs (2 off). Torque fixings supplied to 2Nm, ensuring grounding straps do not rotate on tightening.

6.2 Attaching the +Y Outer Panel (Item 6)

6.2.1 Appendix A1-3 shows the minimum build requirement for attaching the +Y Outer Panel. However, an alternative minimum build is to attach the Mid Panel (4) as defined in Section 6.3 instead of the +X Outer Panel (3).

6.2.2 Attach the +X Outer Panel (or Mid Panel (4)) as described in Section 6.1 (or 6.3).

6.2.3 Assemble the +Y Outer Panel (6) to the Baseplate (1) and to the +X Outer Panel (3) using 12 off Screws (15) and 12 off Washers (17). Torque fixings to 6.0 Nm. Refer to Section 5.2 prior to fitting the panel.

6.2.4 Attach the grounding strap on the panel to the grounding point on the +X Outer Panel. Torque fixing supplied to 2Nm, ensuring grounding strap does not rotate on tightening.

6.3 Attaching the Electronics Compartment Sub-assembly (Items 2, 4, 9 and 10)

6.3.1 Appendix A1-4 shows the minimum build requirement for attaching the Electronics Compartment Sub-assembly.

6.3.2 Assemble the Electronics Panel (9) to the Mid Panel (4) and the -X Outer Panel (2) using 14 off Screws (15) and 14 off Washers (17). Torque fixings to 6.0 Nm. Refer to Section 5.2 prior to fitting the panels.

6.3.3 Assemble the EU Top Panel (10) to the Mid Panel (4) and the -X Outer Panel (2) using 13 off Screws (15) and 13 off Washers (17). Attach the two cleats on the EU Top Panel to the -X Outer Panel using 4 off Screws (16) and 4 off Washers (17). Torque fixings to 6.0 Nm. Refer to Section 5.2 prior to fitting the panels

6.3.4 Fit the completed Sub-Assembly to the Baseplate (1) using 13 off Screws (15) and 13 off Washers (17). Torque fixings to 6.0 Nm. Refer to Section 5.2 prior to fitting the assembly.

6.3.5 Attach grounding straps between the following grounding points:-

-X Panel (2) and Baseplate (1)
-X Panel (2) and EU Top Panel (10)
-X Panel (2) and Electronics Panel (9)
Mid Panel (4) and +Y Outer Panel (6)

Torque fixings supplied to 2Nm, ensuring grounding straps do not rotate on tightening.

6.4 Attaching the Mezzanine Panel (Item 8)

6.4.1 Appendix A1-5 shows the minimum build requirement for attaching the Mezzanine Panel.

6.4.2 The +Y Outer Panel (6) and Mid Panel (4) should be attached and torqued to the values provided in Sections 6.2 and 6.3, respectively.

6.4.3 Assemble the Mezzanine Panel (8) to the +Y Panel (6) and the Mid Panel (4). Use 2 off Screws (15) and 2 off Washers (17) for attachment to the +Y panel and attach the seven cleats on the Mezzanine Panel to the Mid Panel using 14 off Screws (16) and 14 off Washers (17). Torque fixings to 6.0 Nm. Refer to Section 5.2 prior to fitting the panels.

6.4.5 Attach the grounding strap on the Mezzanine Panel to the +Y Outer Panel grounding point. Torque fixings supplied to 2Nm ensuring grounding strap does not rotate on tightening.

6.5 Attaching the -Y Outer Panel (Item 5)

6.5.1 Appendix A1-6 shows the minimum build requirement for attaching the -Y Outer Panel.

6.5.2 Attach the +X and +Y Outer Panels, the Electronics Compartment Sub-assembly and the Mezzanine Panel as shown in Sections 6.1 to 6.4.

6.5.3 Assemble the -Y Outer Panel (5) to the Baseplate (1) using 10 off screws (15) and 10 off Washers (17). Torque fixings to 6.0 Nm. Refer to Section 5.2 prior to fitting the panel.

6.5.4 Assemble the -Y Outer Panel to the Mezzanine Panel (8), Mid Panel (4), -X Outer Panel (2), +X Outer Panel (3), and Electronics Shelf (9) using 22 off Screws (15) and 22 off Washers (17). Torque fixings to 6.0 Nm. Refer to Section 5.2 prior to fitting the panels.

6.5.5 Attach the grounding straps between the -Y Outer Panel and the Baseplate, the -Y Outer Panel and the Mezzanine Panel, and the -Y Outer Panel and the Mid Panel. Torque fixings supplied to 2Nm, ensuring grounding straps do not rotate on tightening.

6.6 Attaching the Sunshield Support Panel (Item 12)

6.6.1 Appendix A1-7 shows the minimum build requirement for attaching the Sunshield Support Panel.

6.6.2 Attach the Electronics Compartment Sub-assembly as shown in Section 6.3.

6.6.3 Attach the Sunshield Support Panel (12) to the EU Top Panel (10) using 12 off Screws (16) and 12 off Washers (17). Torque fixings to 6.0 Nm. Refer to Section 5.2 prior to fitting the panels.

6.6.4 Attach the -X Sunshield Lip (13) to the Sunshield Support Panel and the -X Outer Panel using 8 off Screws (16) and 8 off Washers (17). Torque fixings to 6.0 Nm. Refer to Section 5.2 prior to fitting the panels.

6.6.5 Attach the grounding straps between the EU Top Panel and Sunshield Support and the -X Sunshield Lip and the -X Outer Panel. Torque fixings supplied to 2Nm, ensuring grounding straps do not rotate on tightening.

6.7 Attaching the Fixed Sunshield Panel (Item 11)

6.7.1 Appendix A1-8 shows the minimum build requirement for attaching the Fixed Sunshield Panel.

6.7.2 Attach the structure panels as shown in Sections 6.1 to 6.6.

6.7.3 Assemble the Fixed Sunshield Panel (11) to the -X Outer Panel (2), -Y and +Y Outer Panels (5 and 6), and the Sunshield Support Panel (12) using 15 off Screws (15) and 15 off Washers (17). Torque fixings to 6.0 Nm. Refer to Section 5.2 prior to fitting the panels. Note that the interface to the sunshield support panel (12) requires shims at each of the 3 fixing positions – refer to Section 10 for details.

6.7.4 Attach the grounding straps between the Fixed Sunshield Panel and the +Y Outer and the -Y Outer Panels. Torque fixings supplied to 2Nm, ensuring grounding straps do not rotate on tightening.

6.8 Attaching the +Y Sunshield Lip (Item 7)

6.8.1 Appendix A1-9 shows the minimum build requirement for attaching the +Y Sunshield Lip.

6.8.2 Attach the +X and +Y Outer panels as shown in Sections 6.1 and 6.2.

6.8.3 Assemble the +Y Sunshield Lip (7) to the +Y Outer Panel (6) using 4 off Screws (16) and 4 off Washers (17). Torque fixings to a value of 6.0 Nm. Refer to Section 5.2 prior to fitting the lip.

6.8.4 Attach the grounding strap from the +Y Outer Panel to the nearest fixing on the +Y Sunshield Lip (7) using 1 off Screw (16) and 1 off Washer (17), ensuring grounding strap does not rotate on tightening.

7. STH STRUCTURE DISASSEMBLY PROCEDURE

7.1 Removing the Sunshield Lips

7.1.1 Remove the grounding straps from the Sunshield lips. Only one end of each strap need be removed.

7.1.2 Remove the +Y Sunshield Lip (Item 7) from the +Y Panel (Item 6). Bag and tag the screws (16) and the washers (17).

7.1.3 Remove the -X Sunshield lip (13) from the Sunshield Support Panel (12) and the -X Outer Panel (2). Bag and tag the screws (16) and the washers (17).

7.2 Removing the Fixed Sunshield and Sunshield Support Panel

7.2.1 Remove the grounding straps from the -Y Outer Panel (5), the +Y Outer Panel (6) and the EU Top Panel (10). Only one end of each strap need be removed. Bag and tag all screws and washers.

7.2.2 Remove the Fixed Sunshield (11) from the -Y Outer Panel (5), +Y Outer Panel (6), +X Outer Panel (3) and the Sunshield Support Panel (12). Bag and tag the screws (15), washers (17), and shim packs.

7.2.3 Remove the Sunshield Support Panel (12) from the EU Top Panel (10). Bag and tag the screws (16) and the washers (17).

7.3 Removing the -Y panel

7.3.1 Remove the grounding straps from the grounding points on the Baseplate (1), the Mezzanine Panel (8), and the Mid Panel (4). Only one end of each strap need be removed. Bag and tag all the screws and washers.

7.3.2 Disconnect the -Y Outer Panel (5) from the +X Outer Panel (3) and the -X Outer Panel (2). Bag and tag the screws (15) and the washers (17).

7.3.3 Disconnect the -Y panel (5) from the Mezzanine Panel (8), the Mid Panel (4), and the Electronics Shelf (9). Bag and tag the screws (15) and the washers (17).

7.3.4 Remove the -Y Panel (5) from the Baseplate (1). Bag and tag the screws (15) and the washers (17).

7.4 Removing the Mezzanine Panel

7.4.1 Remove the grounding strap from the grounding point between the Mezzanine Panel (8) and the +Y Outer Panel (6). Only one end of the strap need be removed. Bag and tag all the screws and washers.

7.4.2 Remove the Mezzanine Panel (8) from the +Y Panel (6), and the Mid Panel (4). Bag and tag the screws (15 and 16) and the washers (17).

7.5 Removal of the Electronics Compartment Sub-assembly

7.5.1 Remove the grounding straps (Item 27) from the grounding points between the following panels:-

-X panel (2) and the Baseplate (1)
-X panel (2) and the EU Top Panel (10)
-X panel (2) and the Electronics Shelf (9)
Mid Panel (4) and the +Y Panel (6)

Only one end of each strap need be removed. Bag and tag all the screws and washers.

7.5.2 Remove from the Baseplate (1) and the +Y Panel (6), the Electronics Compartment subassembly, which comprises the EU Top Panel (10), the Mid Panel (4), the Electronics Shelf (9), and the -X Panel (2). Bag and tag the screws (15) and the washers (17).

7.5.3 Remove the EU Top Panel (10) from the Mid Panel (4) and the -X Panel (2). Bag and tag the screws (15 and 16) and the washers (17).

7.5.4 Remove the Electronics Shelf (9) from the Mid Panel (4) and the -X Panel (2). Bag and tag the screws (15) and the washers (17).

7.6 Removing the +Y Outer Panel

7.6.1 Remove the grounding strap from the grounding points between the +Y panel (6) and the +X Panel (3). Only one end of the strap need be removed. Bag and tag all the screws and washers.

7.6.2 Remove the +Y Panel (6) from the Baseplate (1) and the +X Panel (3). Bag and tag the screws (15) and the washers (17).

7.7 Removing the +X Outer Panel

7.7.1 Remove the two grounding straps between the +X Panel (3) and the Baseplate (1). One end of each strap need only be removed. Bag and tag all the screws and washers.

7.7.2 Remove the +X panel (3) from the Baseplate (1). Bag and tag the screws (15) and the washers (17).

8. INTEGRATION OF THE SPACE VIEW APERTURE ASSEMBLY (SVA)

8.1 Introduction

Numbers in brackets (x) refer to item numbers shown in Tables 3.1 and 3.2.

8.1.1 The Space View Aperture (SVA) Assembly (300) is fixed to the +Y Outer Panel (6) using special for purpose fixings. These are included in the Structure / Thermal Subsystem Assembly Kit (500).

8.2 Attaching the SVA to the structure.

8.2.1 Appendix B1-1 shows the minimum build requirement for attaching the SVA to the structure.

8.2.2 Attach the +X Outer Panel (3), +Y Outer Panel (6) and Mid Panel (4) to the Baseplate (1) as shown in Sections 6.1 to 6.3.

8.2.3 The Structure Assembly Kit for the SVA comprises the following:-

ITEM NO.	PART NUMBER	DESCRIPTION	NO. OFF
B1	HR2L031	BOLT SPECIAL	5
B2	HR2L032	WASHER BRACKET SPECIAL	5
B3	HR2L033	SPACER	5
B4	MN50014	DISC SPRING	10
B5	F844329-001	MJ4 TITANIUM STD. SKT. SCREW 16 LONG	1
B6	F834292-001	M4 ALUMINIUM WASHER	1

8.2.4 Remove the Albedo Shield from the SVA Assembly by unscrewing the 'C' hole screws shown in Appendix B1-2.

8.2.5 Assemble 5 off fixing assemblies. Each fixing assembly must be assembled in the following sequence:- Bolt Special (B1), followed by Spacer (B3), followed by Disc Spring (B4), and finally by Washer Bracket Special (B2)

8.2.6 Attach the SVA to the +Y Outer Panel (6) using the 5 off assemblies described in Section B.2.5 at positions 'A' and items B5 and B6 at Position 'B', as shown in Appendix B1-2. Torque fixings to the following values.

Position 'A' 0,4 to 0,5 Nm
Position 'B' 2,1 to 2,2 Nm

8.2.7 Re-attach the Albedo Shield using supplied screws and torque fixings to 0,45 to 0,55 Nm.

8.2.8 Removal is the reverse of the above. Bag and Tag all screws and washers.

9. INTEGRATION OF THE SUNSHIELD DOOR AND APERTURE PLATE ASSEMBLY

9.1 Introduction

Numbers in brackets (x) refer to item numbers shown in Tables 3.1 and 3.2.

9.1.1 The Sunshield Door and Aperture Plate Assembly (400) is attached to four panels of the structure assembly; +Y Outer Panel (6), -Y Outer Panel (5), Mezzanine Panel (8) and the Fixed Sunshield (11). Special for purpose fixings are included in the Structure / Thermal Subsystem Assembly Kit (500).

9.2 Attaching the Sunshield Aperture Plate to the structure.

9.2.1 Appendix C1-1 shows the minimum build requirement for attaching the Sunshield Aperture Plate to the structure.

9.2.2 The Structure Assembly must be complete apart from the Fixed Sunshield (11) before attachment of the Aperture Plate can take place. This is defined in Sections 6.1 to 6.6 and 6.8.

9.2.3 Loosely attach the Sunshield Aperture Plate to the +Y Outer Panel (6), -Y Outer Panel (5) and Mezzanine panel (8) using 26 off M4 x 0,7 x 12 long Titanium Torx Head screws (Part No. SF105-0001-018N) contained in the Structure / Thermal Subsystem Assembly Kit (500). The removable cleats at the -Y edge of the aperture plate should be released to allow adjustment of the aperture plate between the +Y and –Y panels. Once adjusted, the cleats shall be refitted and the nuts re-torqued to 2.4 Nm. Note that the interface to the +Y panel (6) requires shims at each of the 8 fixing positions – refer to Section 10 for details.

9.2.4 Loosely attach the Fixed Sunshield (11) to the adjoining panels as described in Section 6.7.

9.2.5 Loosely attach the Aperture Plate to the Fixed Sunshield (11) using the 10 off remaining M4 x 0,7 x 12 long screws. Note that the interface to the Fixed Sunshield requires shims at 9 of the 10 fixing positions – refer to Section 10 for details.

9.2.6 Refer to Appendix C.1-2. Unlatch the Sunshield door by inserting an M5 socket head drive into the raised bolt head, located on the top surface of the latch body. Rotate the drive slowly clockwise until the latch roller disengages from the door plate and the catch engages.

Warning: Under no circumstances shall the drive be rotated anti-clockwise whilst the catch is engaged. This will result in damage to the latch spring mechanism.

9.2.7 Torque all 36 off fixings on the Aperture Plate to 6,0 Nm.

9.2.8 Refer to Appendix C.1-2. Re-latch the Sunshield door by reinserting the drive into the raised bolt head. Rotate the drive slowly clockwise until the catch can be disengaged from the spring mechanism. Gently pull the spring mechanism clear of the catch, and allow the roller to roll back over the door plate.

9.2.9 Unlatch the door prior to removing the Aperture Plate from the structure. Re-latch the door on completion. Bag and Tag all screws, washers, and shim packs.

10. SHIM DETAILS

Shims were required at the following interfaces :-

- Fixed Sunshield to Sunshield Support Panel
- Sunshield Door and Aperture Plate Assembly to +Y Panel
- Sunshield Door and Aperture Plate Assembly to Fixed Sunshield

The general philosophy adopted was to shim gaps exceeding 0.05mm. The shims were produced from peelable shim packs comprising 0.05mm thick layers. **Failure to implement a shim strategy may result in damage to the interface hardware.**

Shim thickness details for the delivered Structure / Thermal Subsystem are provided in the Tables below and with reference to the Figures in Appendix D. Shim gaps should be measured during each build sequence as it is likely that there will be some variation due to the build-up of tolerances.

Shim Position (See Appendix D1-1)	Shim thickness (mm)
A1	2,00
A2	1,60
A3	1,25

Table 10-1 Fixed Sunshield to Sunshield Support Panel Shim Details

Shim Position (See Appendix D1-2)	Shim thickness (mm)
B1	0,00
B2	0,30
B3	0,25
B4	0,30
B5	0,35
B6	0,40
B7	0,35
B8	0,35
B9	0,25
B10	0,25

Table 10-2 Fixed Sunshield to Sunshield Aperture Plate Shim Details

Shim Position (See Appendix D1-3)	Shim thickness (mm)
C1	1,25
C2	1,25
C3	1,30
C4	1,00
C5	1,30
C6	0,95
C7	1,15
C8	1,10

Table 10-2 +Y Panel to Sunshield Aperture Plate Shim Details

APPENDIX A

INTEGRATION OF THE STH STRUCTURE ASSEMBLY

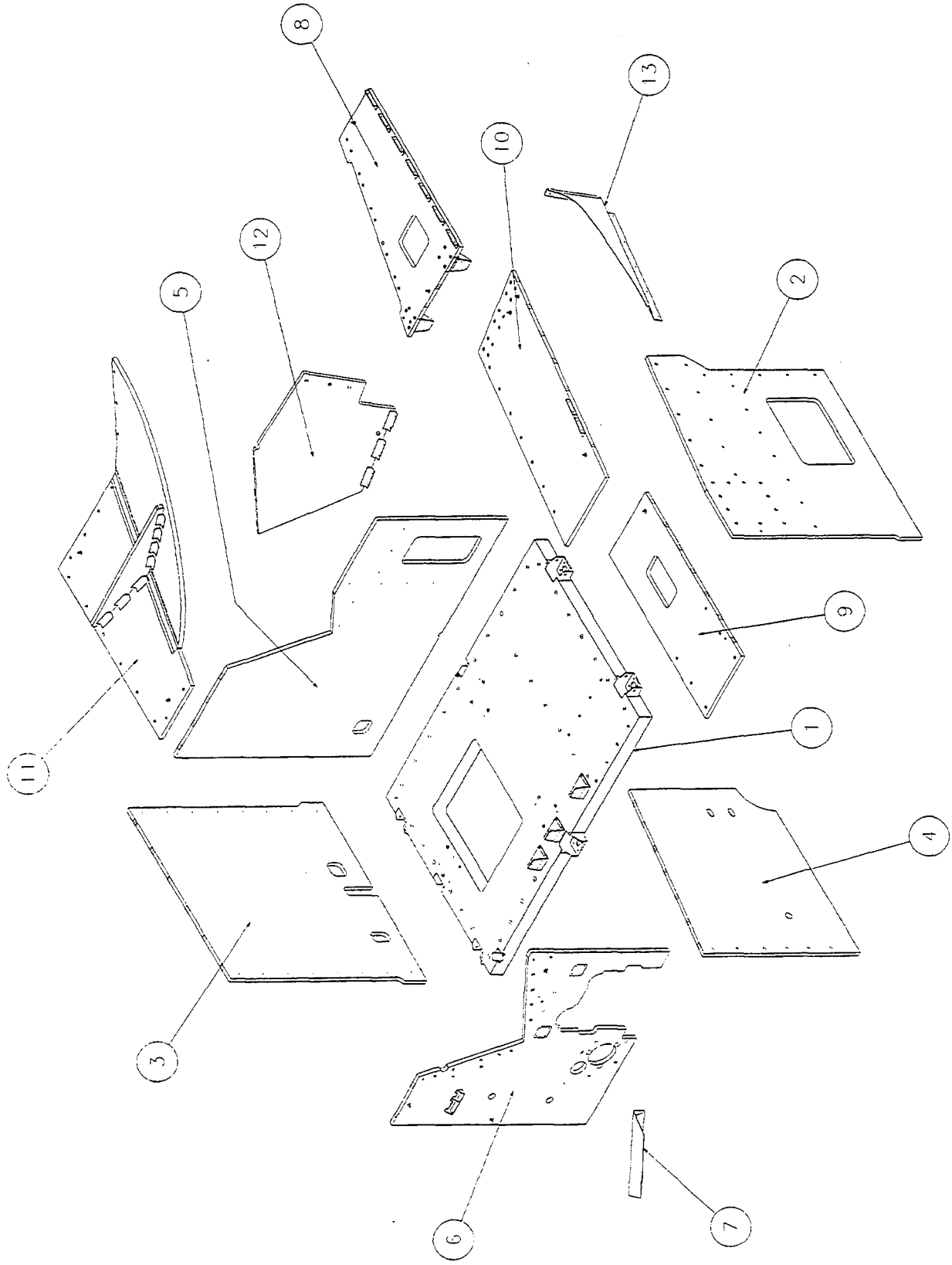

APPENDIX A1-1 EXPLODED VIEW OF STRUCTURE ASSEMBLY

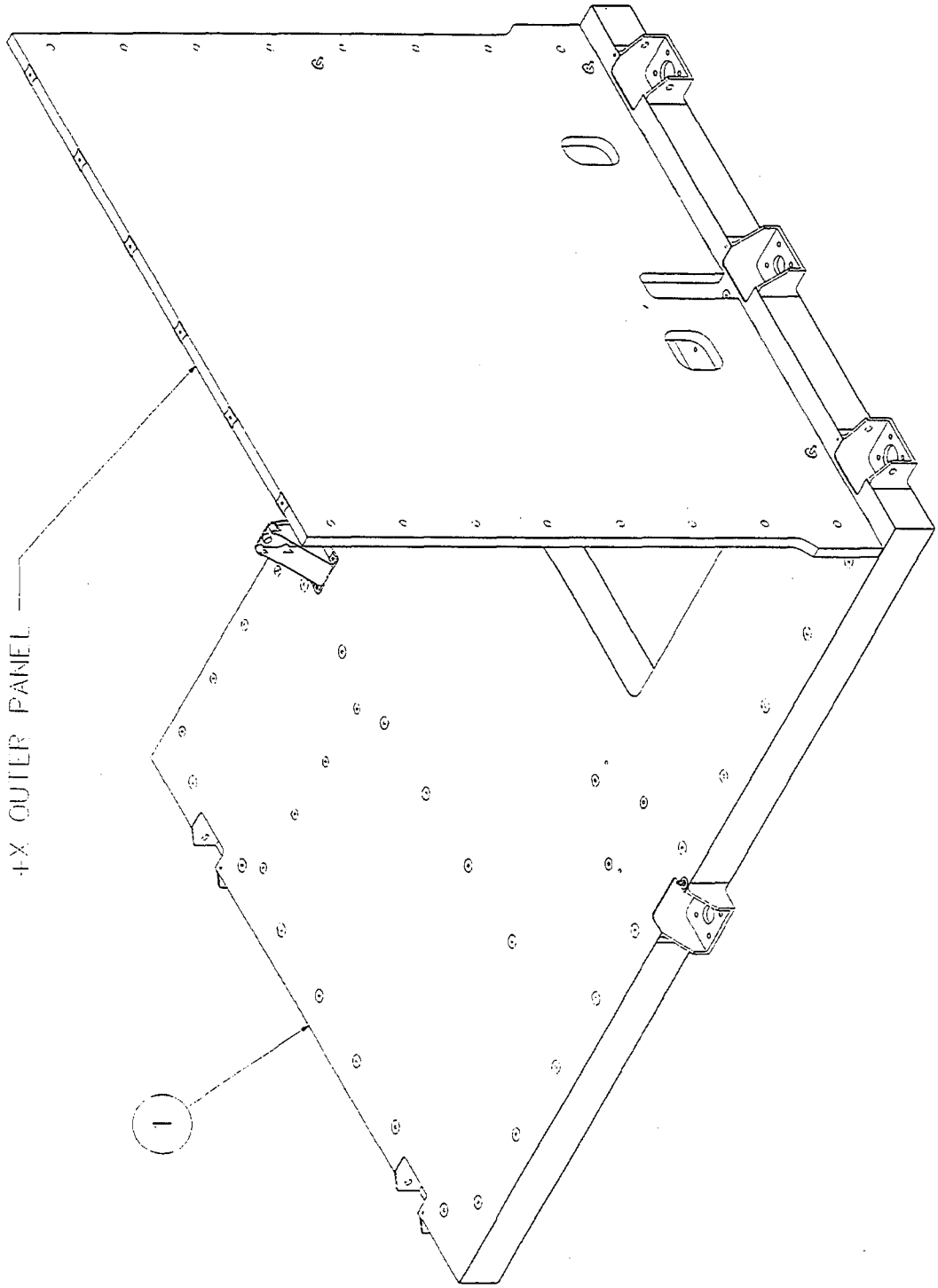

APPENDIX A1-2 ASSEMBLY OF +X OUTER PANEL TO BASEPLATE

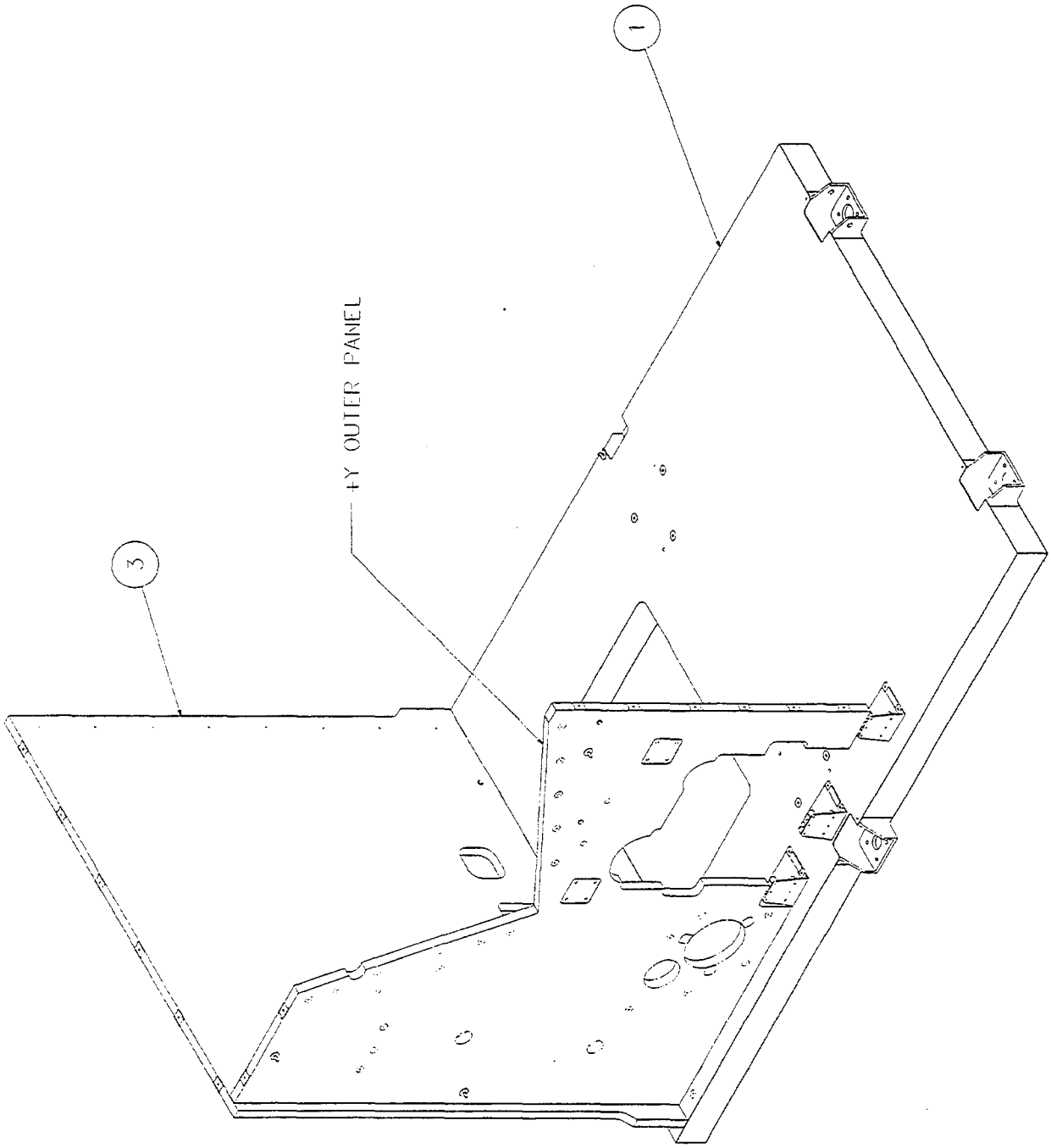

APPENDIX A1-3 ASSEMBLY OF THE +Y OUTER PANEL TO BASEPLATE

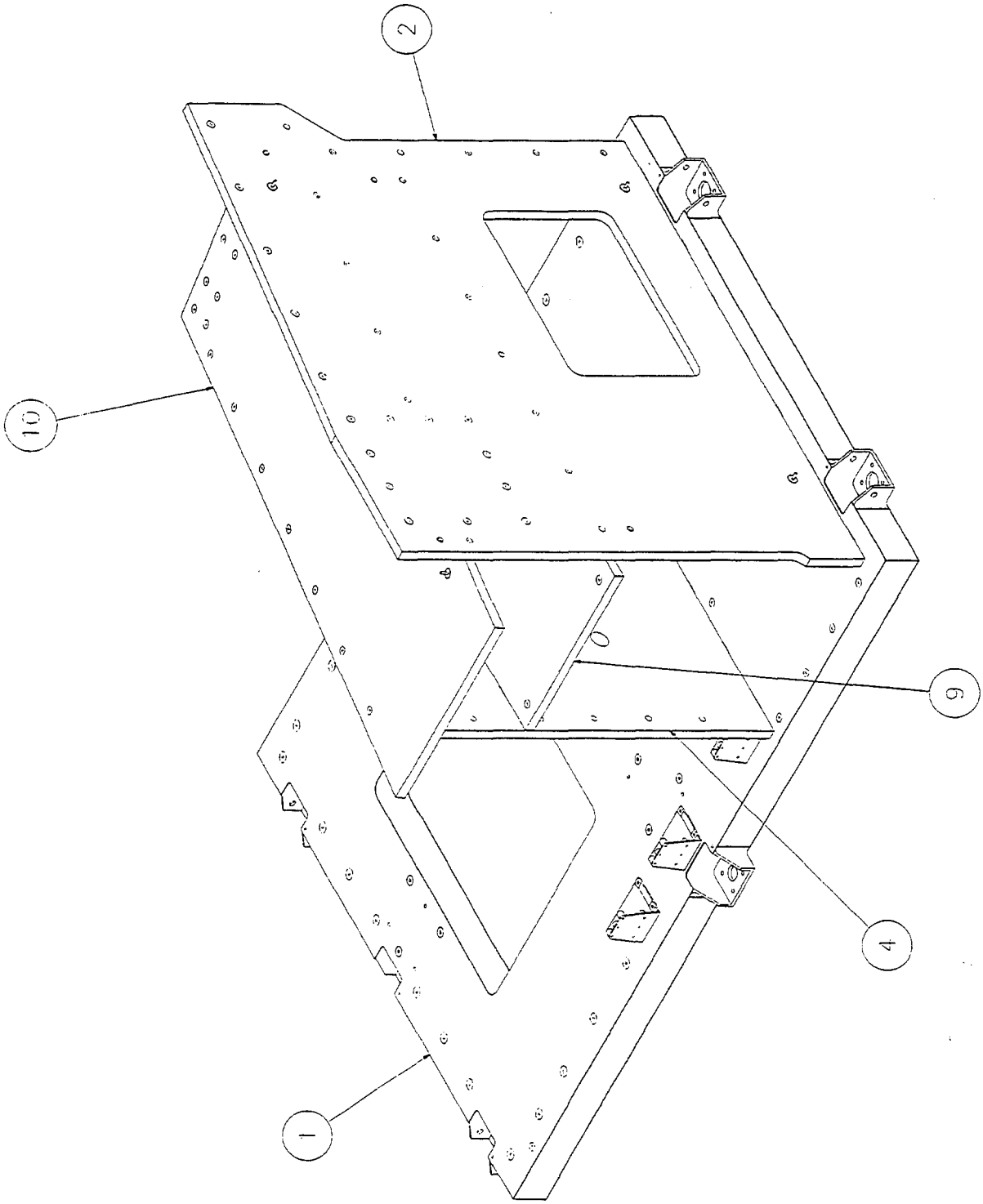

APPENDIX A1-4 ASSEMBLY OF ELECTRONICS COMPARTMENT SUBASSEMBLY

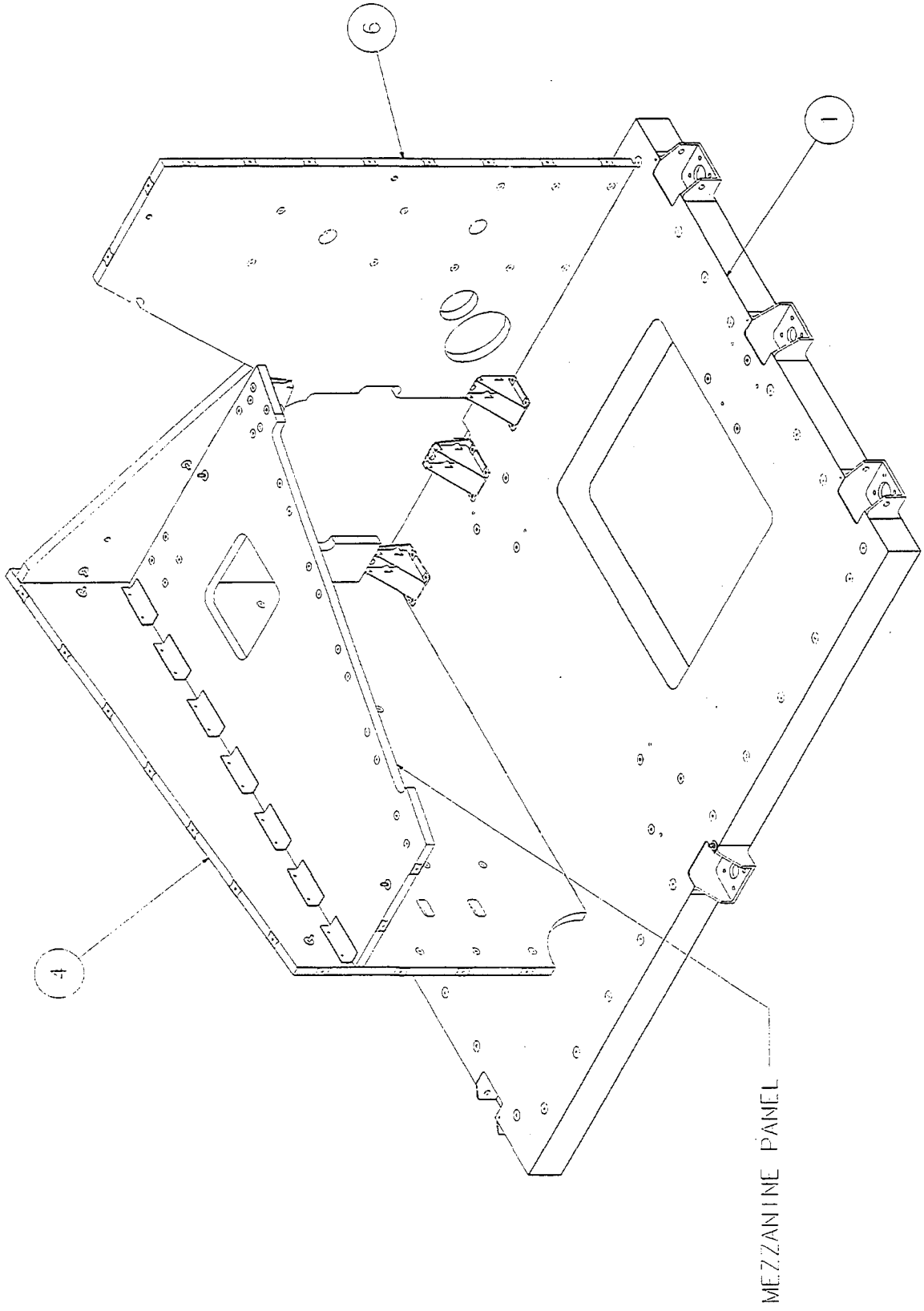

APPENDIX A1-5 ASSEMBLY OF THE MEZZANINE PANEL

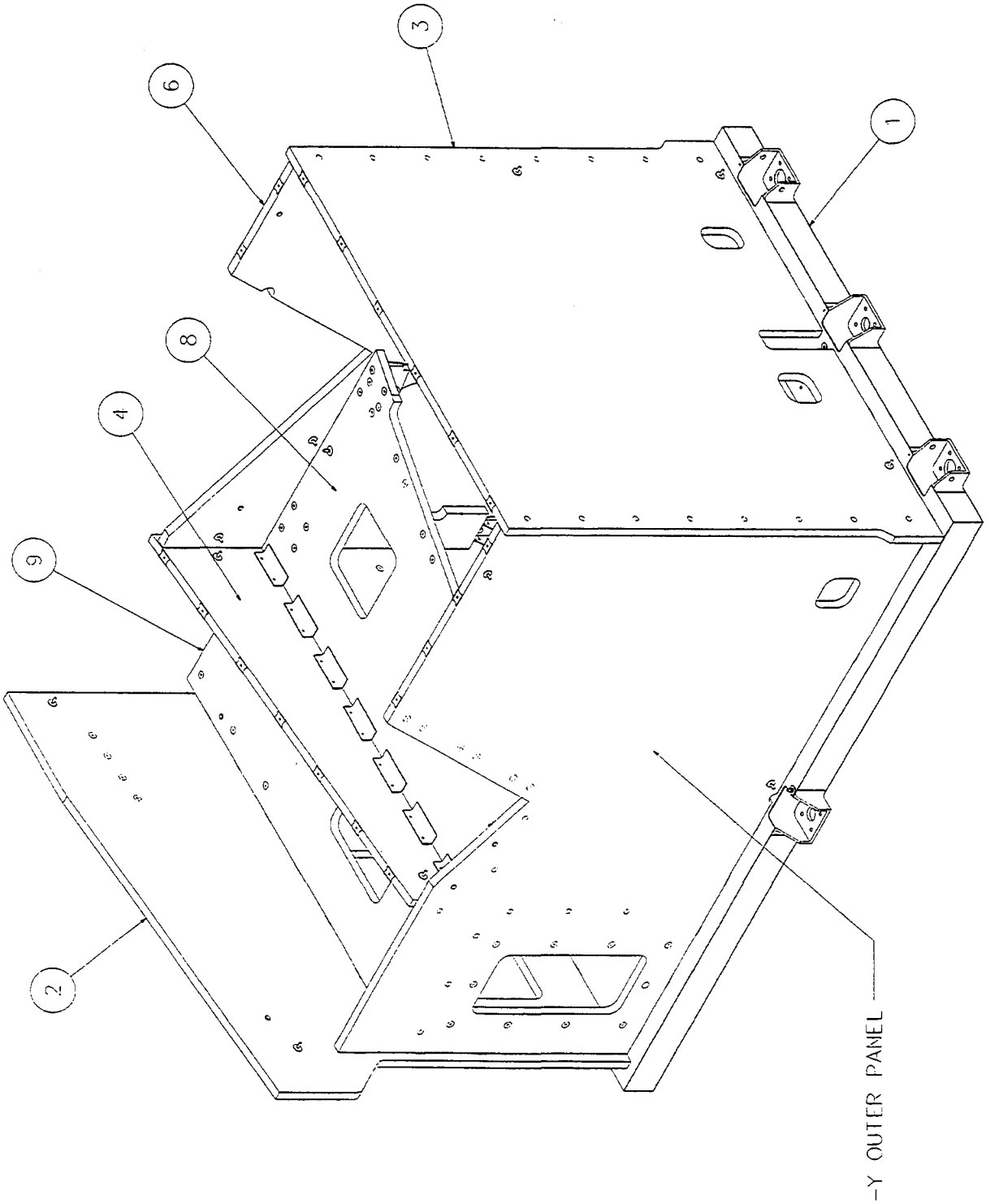

APPENDIX A1-6 ASSEMBLY OF THE -Y OUTER PANEL

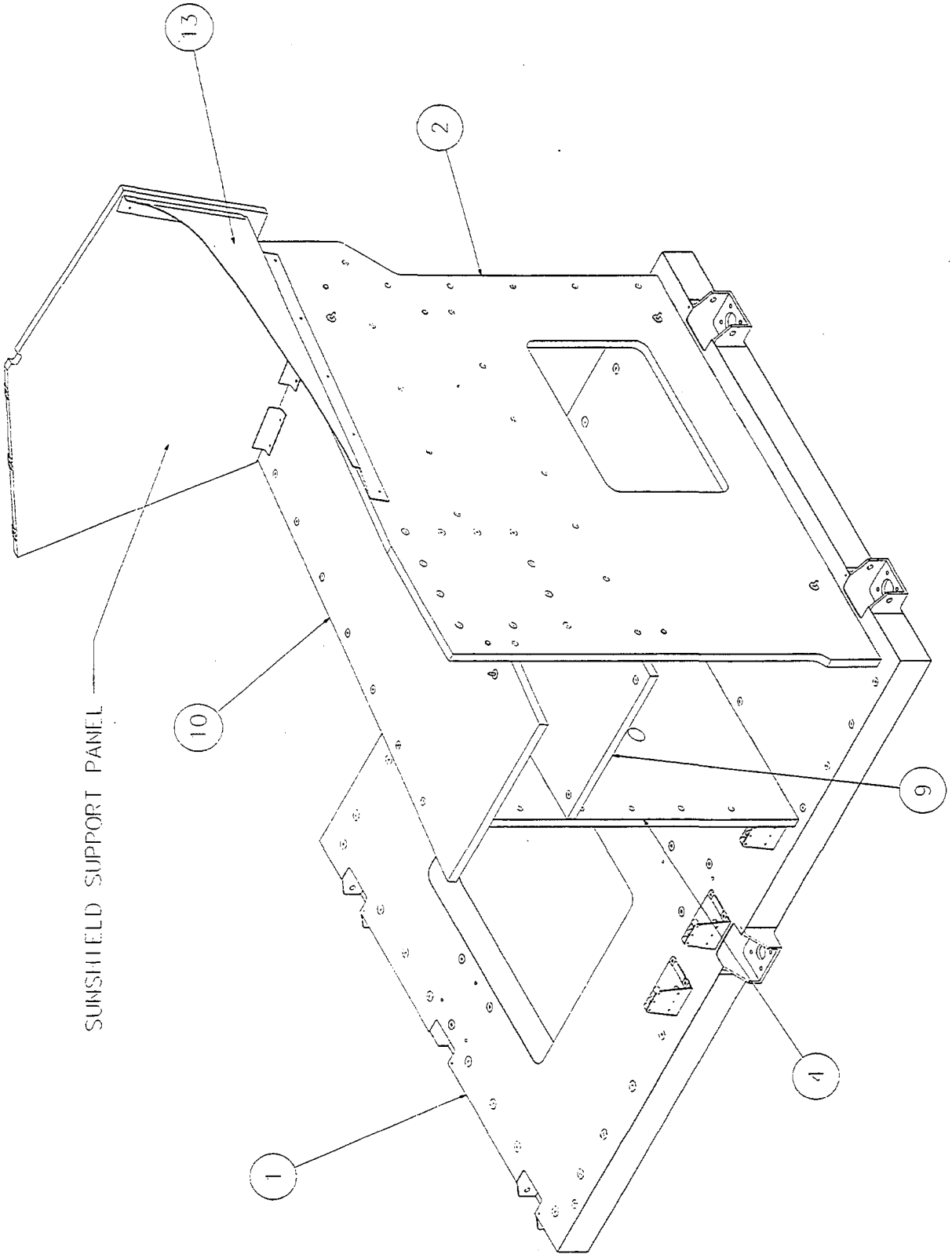

APPENDIX A1-7 ASSEMBLY OF THE SUNSHIELD SUPPORT PANEL

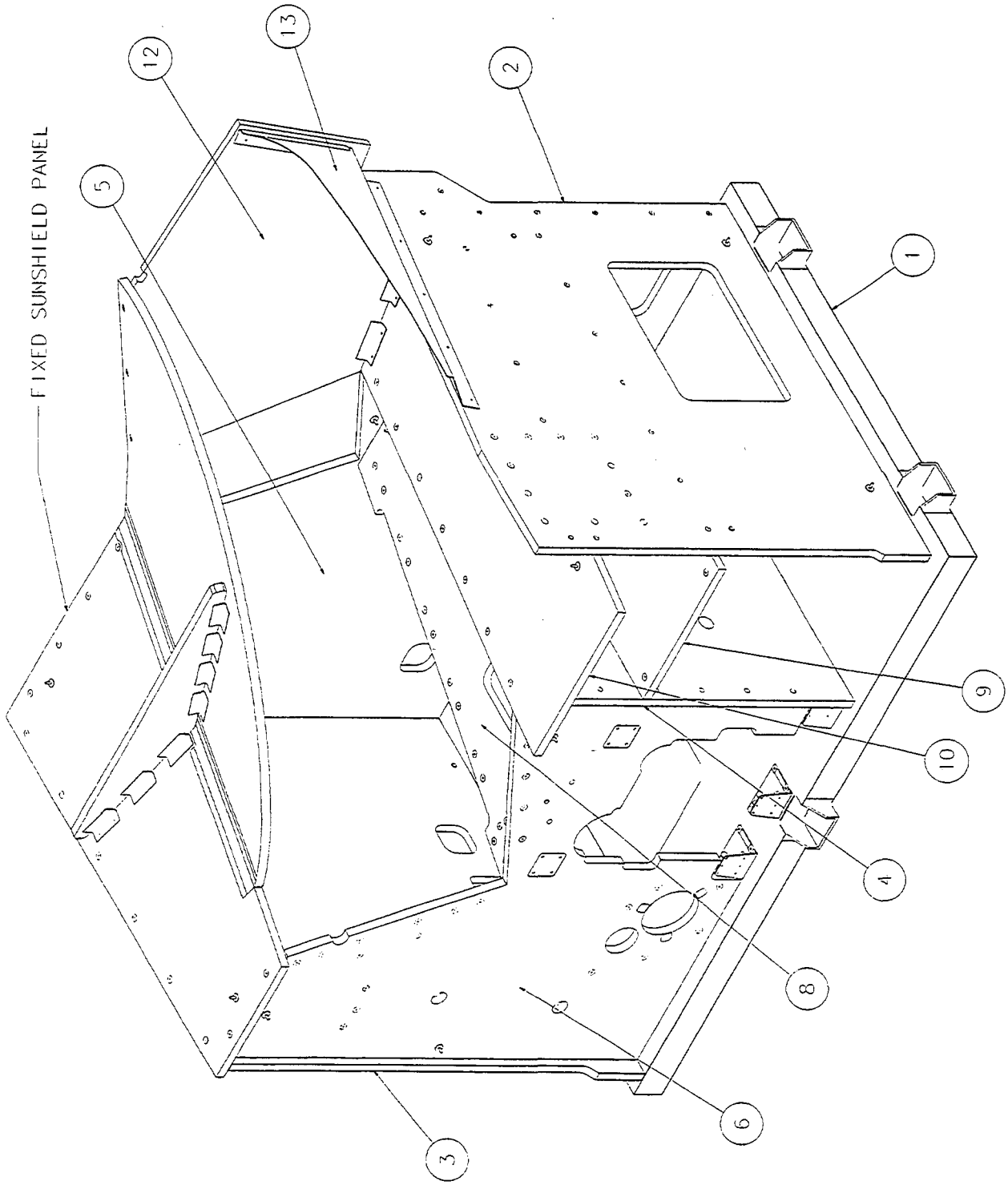

APPENDIX A1-8 ASSEMBLY OF FIXED SUNSHIELD PANEL

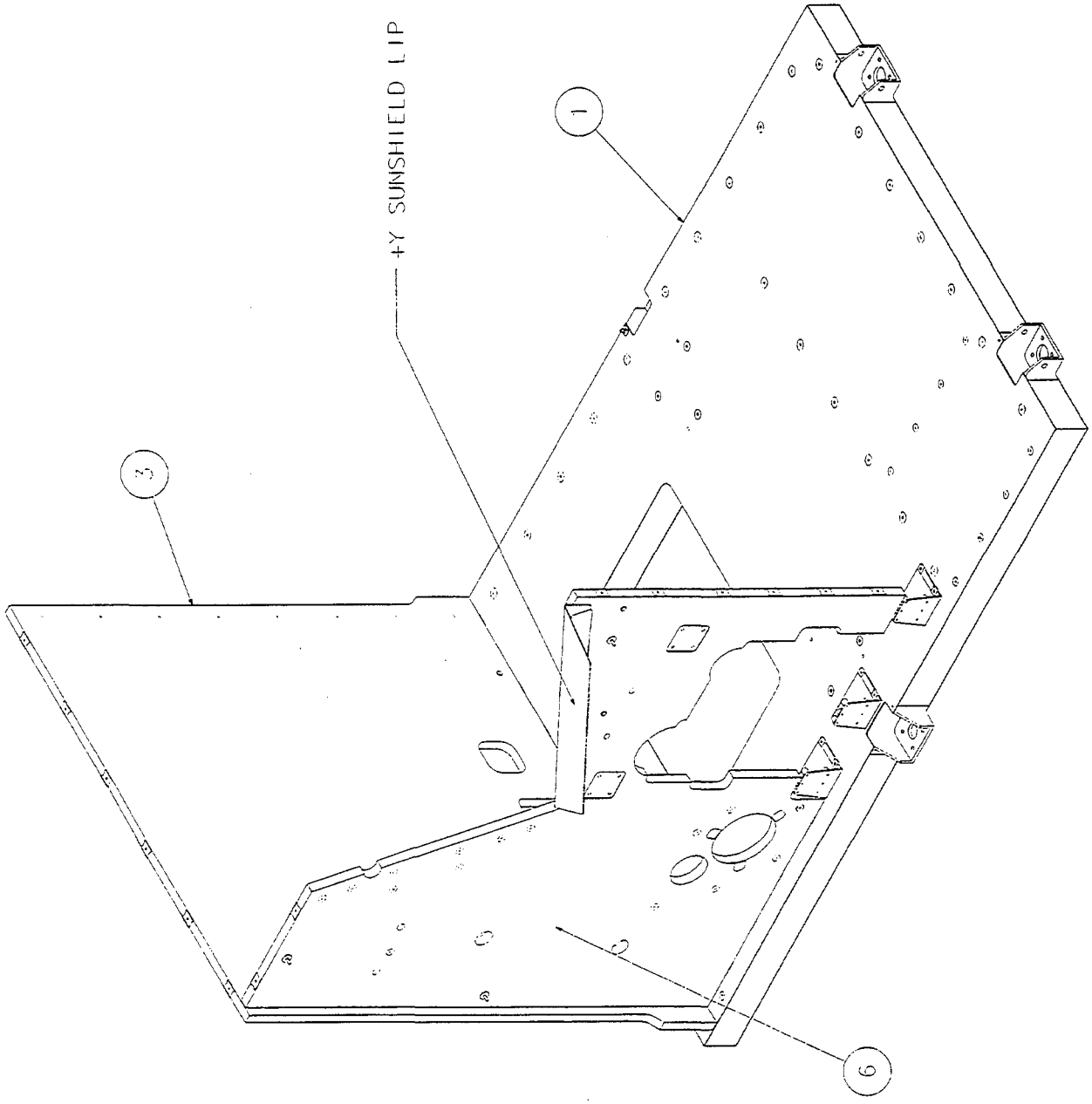

APPENDIX A1-9 ASSEMBLY OF THE +Y SUNSHIELD LIP

APPENDIX B

INTEGRATION OF THE SPACE VIEW APERTURE ASSEMBLY

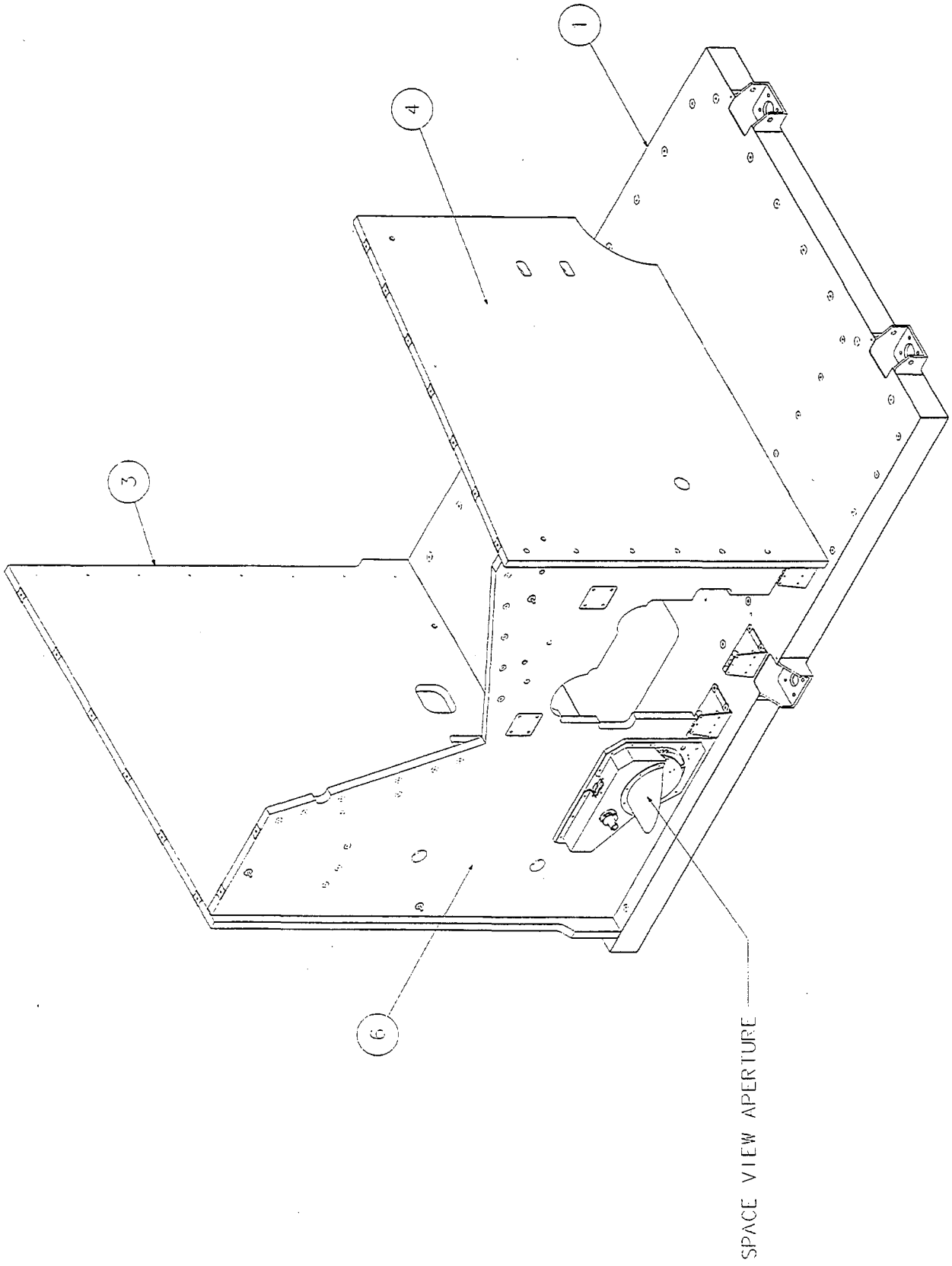

APPENDIX B1-1 ASSEMBLY OF THE SPACE VIEW APERTURE

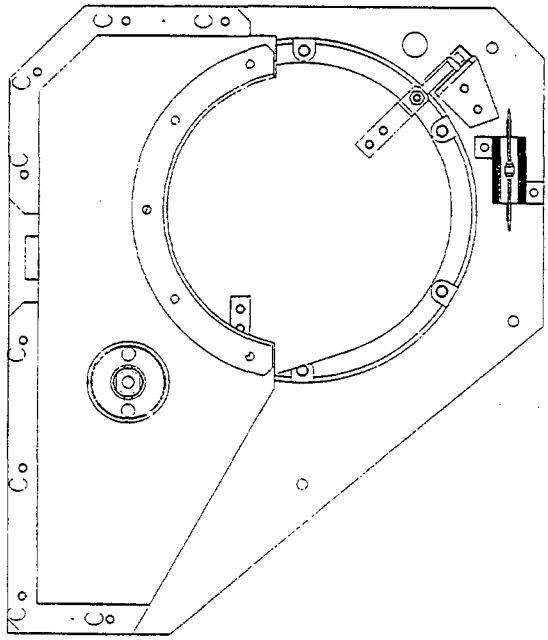

ASSEMBLY OF ALBEDO SHIELD

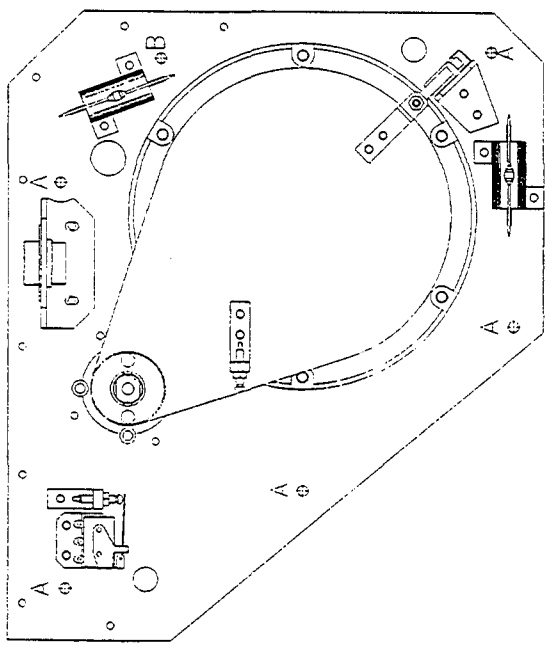

ASSEMBLY OF SVA

APPENDIX B1-2 ASSEMBLY OF SVA AND ALBEDO SHIELD

APPENDIX C

INTEGRATION OF THE SUNSHIELD DOOR AND APERTURE PLATE ASSEMBLY

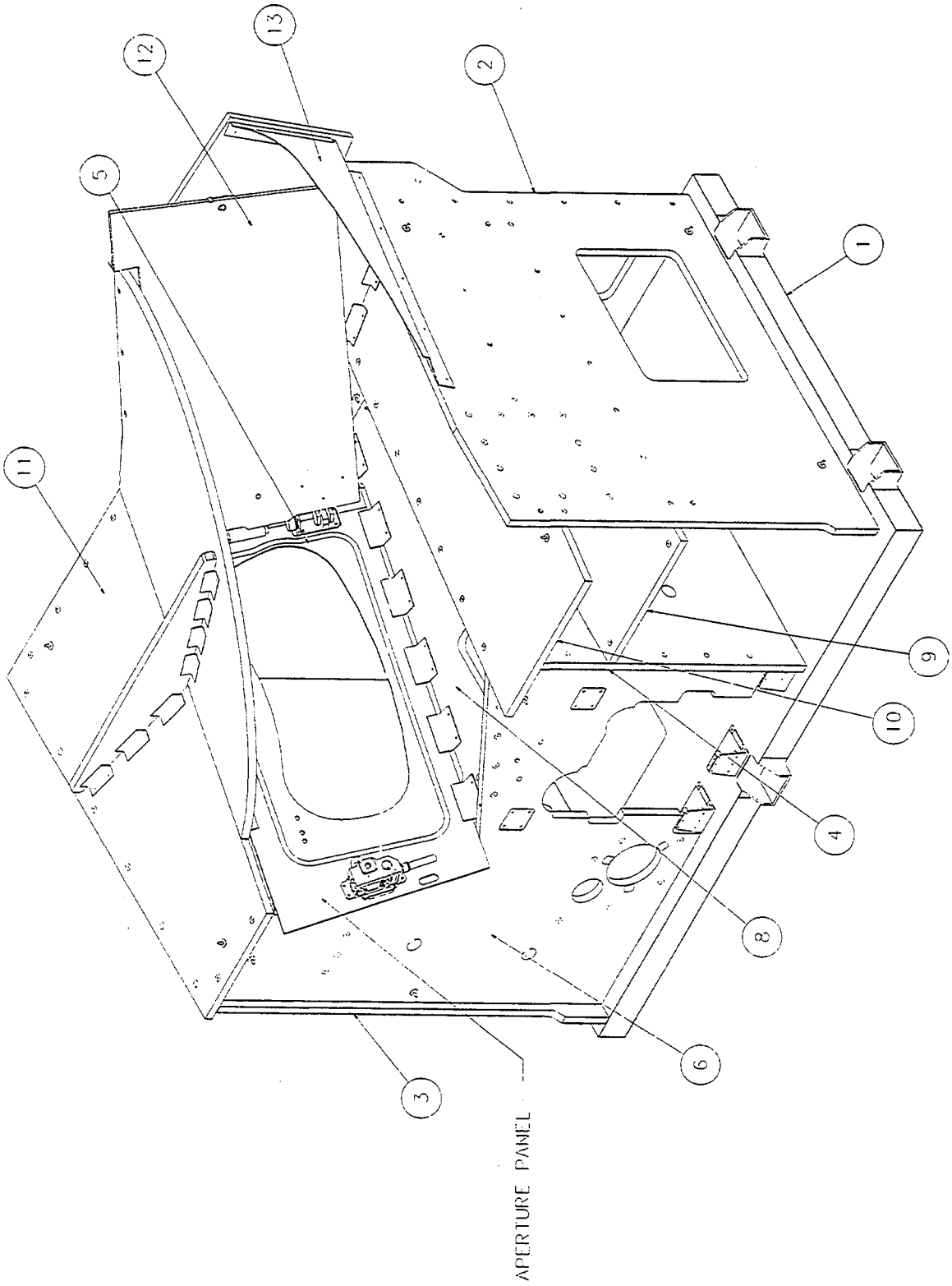

APPENDIX C1-1 ASSEMBLY OF THE APERTURE PLATE

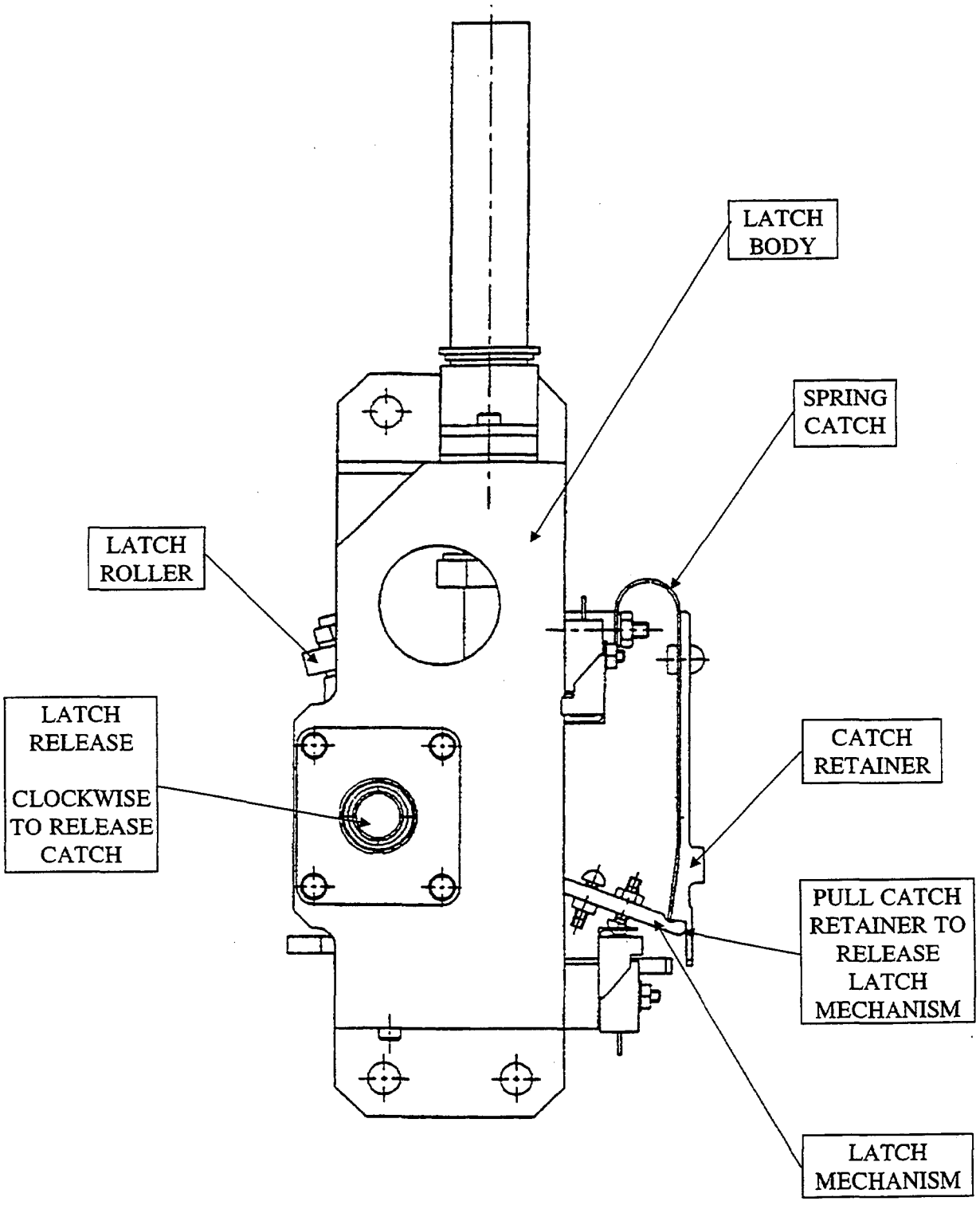

APPENDIX C1-2 VIEW OF DOOR LATCHING MECHANISM (SHOWN IN UNLATCHED POSITION

APPENDIX D

SHIM DETAILS

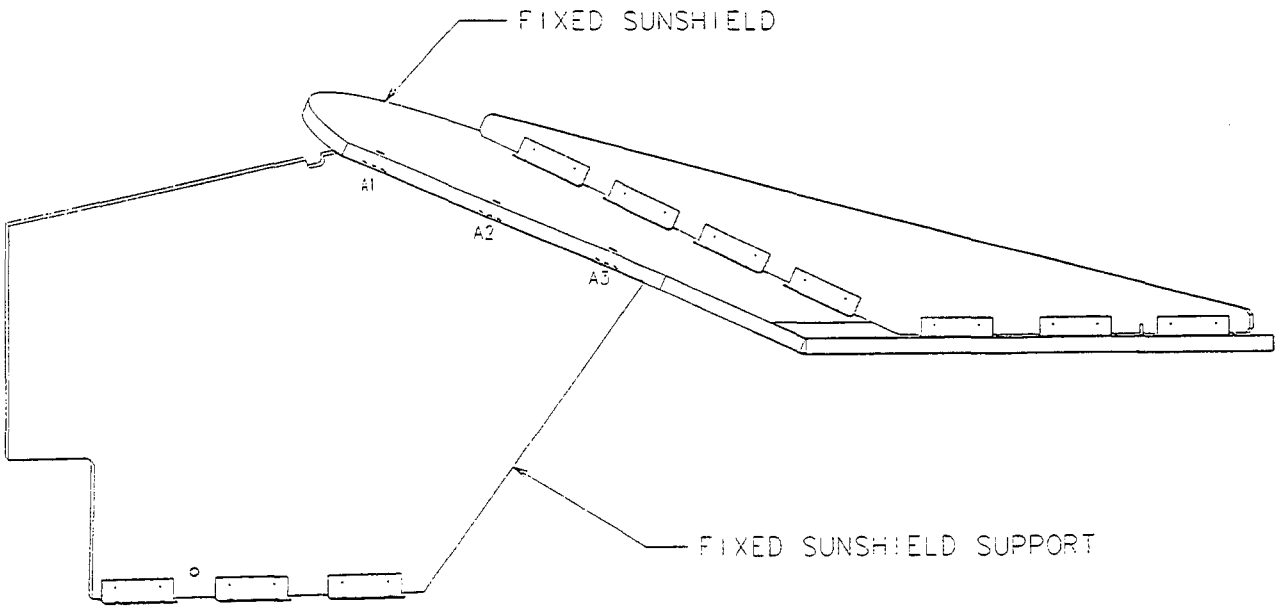

APPENDIX D1-1 SHIM DETAILS – FIXED SUNSHIELD SUPPORT

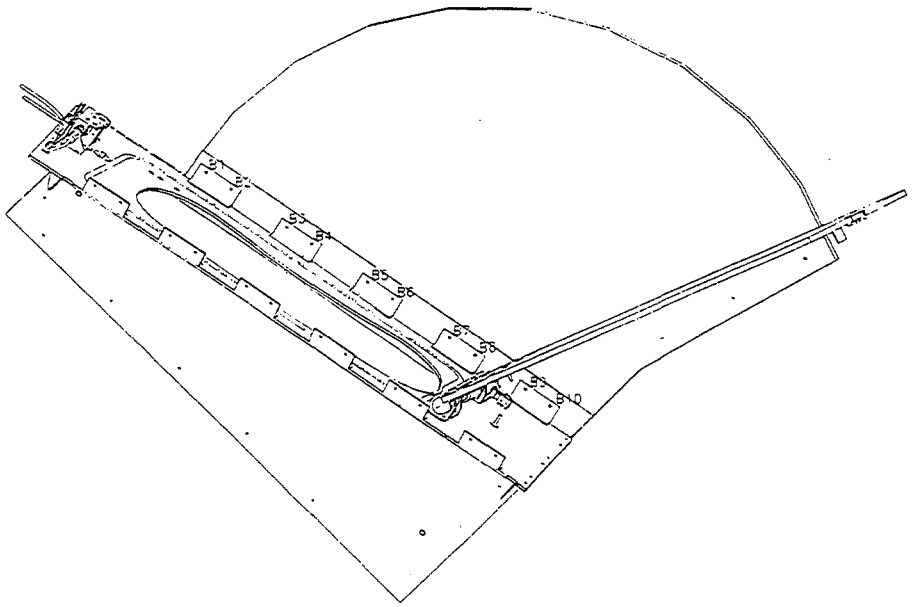

APPENDIX D1-2 SHIM DETAILS – SUNSHIELD APERTURE PLATE (VIEWED ON UNDERSIDE OF FIXED SUNSHIELD)

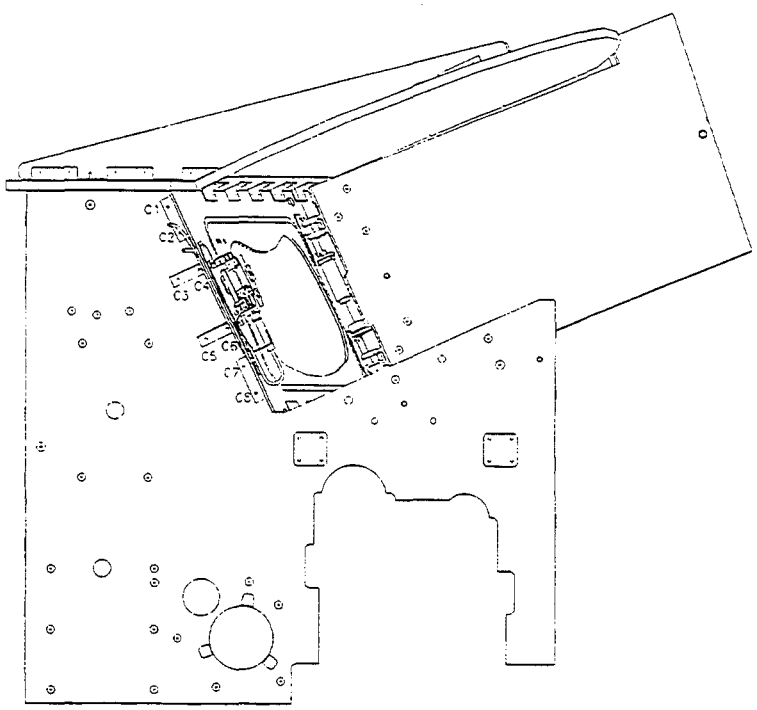

APPENDIX D1-3 SHIM DETAILS – SUNSHIELD APERTURE PLATE (VIEWED ON +Y PANEL SIDE)

DISTRIBUTION LIST

INTERNAL	EXTERNAL
I K Stewart	N Morris (RAL) (2)
N Crossland	One copy delivered with the STH assembly
A J Stewart	
T Forward	

CHANGE RECORD

CHANGE NUMBER	CLASS	CHANGE DETAILS	ISSUE
3164-00315	-	First Issue	1
3164-00347	II	Thermal hardware installation moved to a separate document and shim details added	2

SECTION 5

SVA Specific Instructions

SVA Operation

- Verify Voltage and current limit settings of EGSE
- Switch off power at the end of each operation
- Allow motor winding to cool between operations
- Do not operate both motors simultaneously.
- All operations of SVA shall be recorded in the operations log book, as total number of operations is limited.

ORIGINAL WHEN RED

Manual For SSH And SVA Test Equipment

Written By : J.K. Watkins Date: 2/11/98
JK Watkins / I McMorine

Checked By : S. Mitchell Date: 2-11-98
S Mitchell

Approved By : R.S. Coupe Date: 2-11-98.
R. Coupe

Distribution :

R.Coupe	MMS Bristol
J.Watkins	MMS Bristol
I. Stewart	MMS Portsmouth
G.Topliss	RAL

© MATRA MARCONI SPACE UK LIMITED 1998

MATRA MARCONI SPACE UK LIMITED owns the copyright of this document which is supplied in confidence and which shall not be used for any purpose other than that for which it is supplied and shall not in whole or in part be reproduced, copied or communicated to any person without written permissions from the owner.

MATRA MARCONI SPACE UK Limited,
PO Box 16, Filton, Bristol, BS12 7YB England

PAGE ISSUE RECORD

The current document comprises the following pages at the issues shown. This document has been Word Processed in file manual02.DOC dated 02/11/98 13:14.

Document	Page	Issue	Document	Page	Issue	Document
	All	1				

DOCUMENT CHANGE LOG

This document has the configuration status history shown.

Issue	Change No.	ECP No.	ECN No.	Revised Date	Affected Pages	Relevant Information
1	3164-00167				All	Initial Issue

TABLE OF CONTENTS

1. INTRODUCTION 5
1.1. PURPOSE 5
1.2. DEFINITIONS, ACRONYMS AND ABBREVIATIONS 5
1.3. REFERENCES 5
2. HARDWARE CONFIGURATION 6
2.1. DESCRIPTION 6
2.1.1. IEEE Controllable Power Supply 6
2.1.2. Prologue P200MMX Desktop Computer 6
2.1.3. National Semiconductor SCXI 1000 Rack 6
2.1.4. Cable Assembly Integrating TB01, TB02, TB03, TB04 6
2.1.5. Test Software 6
2.2. BLOCK DIAGRAMS 6
3. HARDWARE DEFINITION 8
3.1. SCXI RACK 8
3.1.1. SCXI-1100 32 CHANNEL ANALOGUE MULTIPLEXER 8
3.1.2. SCXI-1162 32 CHANNEL DIGITAL INPUT 8
3.1.3. SCXI-1160 16 RELAY CHANNELS 8
3.1.4. SCXI_1180/81 BASED STEPPER DRIVE BOARD 9
3.1.5. SCXI WIRING LIST 9
3.2. COMPUTER AND ACCESSORIES 9
3.2.1. COMPUTER 9
3.2.2. IEEE BOARD 10
3.2.3. DATA ACQUISITION BOARD 10
3.2.4. STEPPER CONTROL BOARD 10
4. SOFTWARE DEFINITION 11
4.1. OPERATING INSTRUCTIONS 11
4.1.1. SSH Stepper Motor Block 11
4.1.2. SSH Hot Wax Actuator Block 11
4.1.3. SSH Door Latch Indicator Block 12
4.1.4. SSH Door Position Indicator Block 12
4.1.5. SSH Door Potentiometer Block 12
4.1.6. SSH Thermistor Block 12
4.1.7. SSH Step Count Request Block 12
4.1.8. SSH Step Count Block 12
4.1.9. SSH Step Block 12
4.1.10. Voltage Selector Block 13
4.1.11. SSH Step Reset Block 13
4.1.12. SSH Step Calibrate Block 13
4.1.13. HIRDLS Calibrate Block 13
4.1.14. SVA Drive Motor Block 13
4.1.15. SVA Drive Monitor Block 13
4.1.16. SVA Door Position Indicator Block 13
4.1.17. SVA Motor Temperature 13
4.2. CALIBRATION PANEL 14
4.2.1. Thermistor Calibration 15
4.2.2. Stepper Motor values 15
4.2.3. Semiconductor Temperature Sensors 16
4.2.4. Maximum Supply Voltage and Current 16
5. SAFETY 17
5.1. EARTHING OF EQUIPMENT 17
5.2. MAINS OPERATING VOLTAGE 17
5.3. EMERGENCY OFF 17

5.4. PRECAUTIONS 17

6. TECHNICAL 18

6.1. PERFORMANCE REQUIREMENTS 18
6.2. ENVIRONMENTAL CONSIDERATIONS 18
6.3. PORTABILITY 18
6.4. RELIABILITY REQUIREMENTS 18
6.5. MAINTAINABILITY REQUIREMENTS 18
6.6. PHYSICAL 18
6.7. TRANSPORT 18

7. APPENDIX A 19

8. APPENDIX B 20

1. INTRODUCTION

1.1. PURPOSE

This manual briefly describes the test equipment designed to test the HIRDLS Sun Shield Subsystem (SSH) and the HIRDLS Space View Aperture (SVA)

The test equipment is designed to allow automatic and manual functional and life testing.

1.2. DEFINITIONS, ACRONYMS AND ABBREVIATIONS

HIRDLS : High Resolution Dynamics Limb Sounder
SSH : Sun Shield Subsystem
SVA : Space View Aperture

1.3. REFERENCES

Ref	Applicable document	Issue	Title
1	SP-HIR-227	Draft	SSH to IPS Interface Control Document (ICD)
2	SP-MMS-354	1	Procurement Specification for a Redundant Stepper Motor/Gearhead Unit

2. HARDWARE CONFIGURATION

2.1. DESCRIPTION

The test equipment consists of the following elements which are shown in Figure 2.1.

2.1.1. IEEE Controllable Power Supply

IEEE controllable power supply and associated mains and IEEE cable (Hewlett Packard 6654A, 60V, 9A).

2.1.2. Prologue P200MMX Desktop Computer

Prologue P200MMX Desktop Computer fitted with the following proprietary boards :-

1. IEEE Controller Board, National Instruments.
2. Data Acquisition Board, National Semiconductor AT-MIO E Series
3. Stepper Controller Board, National Semiconductor pcStep 4A and associated ribbon cable.

2.1.3. National Semiconductor SCXI 1000 Rack

National Semiconductor SCXI 1000 Rack containing the following boards and terminal blocks :-

1. SCXI 1100 32 channel analogue multiplexer board with SCXI 1300 terminal block unit designated TB01.
2. SCXI 1162 32 channel digital input board with SCXI 1301 terminal block designated TB02.
3. SCXI 1160 16 channel relay board with SCXI 1324 terminal block designated TB03.
4. SCXI 1181 breadboard module with stepper drive circuitry, reference voltages, current limit circuitry and SCXI 1301 terminal block designated TB04.

2.1.4. Cable Assembly Integrating TB01, TB02, TB03, TB04

Cable assembly integrating TB01, TB02, TB03, TB04, J211P, J212P and J221P, thereby interfacing the test equipment with the SSH and SVA prime equipment's.

2.1.5. Test Software

Test software written using National Instruments Labview version 5.0.1.

2.2. BLOCK DIAGRAMS

A block diagram of the test equipment is shown on the next page.

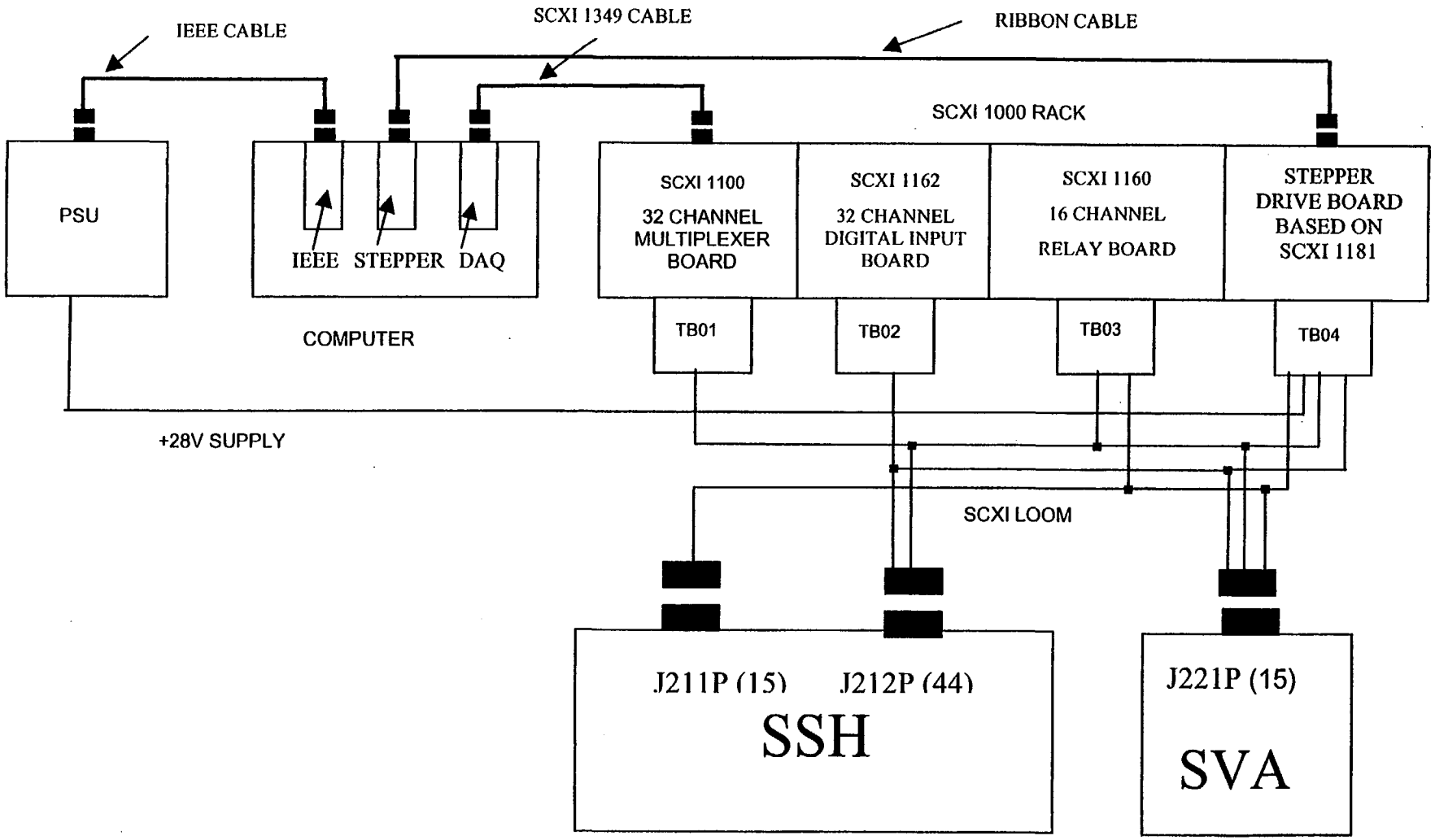
IEEE CABLE
SCXI 1349 CABLE
RIBBON CABLE
SCXI 1000 RACK
PSU
IEEE
STEPPER
DAQ
COMPUTER
SCXI 1100
32 CHANNEL MULTIPLEXER BOARD
SCXI 1162
32 CHANNEL DIGITAL INPUT BOARD
SCXI 1160
16 CHANNEL
RELAY BOARD
STEPPER DRIVE BOARD BASED ON SCXI 1181
TB01
TB02
TB03
TB04
+28V SUPPLY
SCXI LOOM
J211P (15)
J212P (44)
SSH
J221P (15)
SVA

3. HARDWARE DEFINITION

3.1. SCXI RACK

3.1.1. SCXI-1100 32 CHANNEL ANALOGUE MULTIPLEXER

This is a standard National Conductor SCXI board used to interface with the Unit Under Test (UUT) thermistor and constant current temperature sensors.

1. The SCXI 1300 Terminal Block Unit, TB01, is used to connect the board to the other SCXI boards in the rack and to the UUT.

2. The wiring of TB01 is described in section 3.1.5.

3. Temperature sensor and thermistor conditioning resistors are included in the TB01 assembly.

3.1.2. SCXI-1162 32 CHANNEL DIGITAL INPUT

This is a standard National Conductor SCXI board used to interface with the UUT micro-switches.

1. The SCXI 1301 Terminal Block Unit, TB02, is used to connect the board to the other SCXI boards in the rack and to the UUT.

2. The wiring of TB02 is described in section 3.1.5.

3. Pull-up resistors are included in the TB02 assembly.

3.1.3. SCXI-1160 16 RELAY CHANNELS

This is a standard National Conductor SCXI board used to switch power supplies and configure the test equipment.

The SCXI 1324 Terminal Block Unit, TB03, is used to connect the board to the other SCXI boards in the rack and to the UUT.

The wiring of TB03 is described in section 3.1.5.

3.1.4. SCXI_1180/81 BASED STEPPER DRIVE BOARD

This is a standard National Conductor SCXI breadboard module containing the following circuitry :-

1. three phase stepper motor drive circuitry.
2. 2 ampere fold-back current limit.
3. three over voltage protections, SSH stepper, SSH Hot Wax Actuator and SVA motor.
4. three 10V voltage references for analogue conditioning purposes on the SCXI-1100 32 Channel Analogue Multiplexer.
5. one 5V dc-dc power converter for use by the board.
6. one 5V dc-dc power converter for use by the SCXI-1162 32 Channel Digital Input Board.

The SCXI 1301 Terminal Block Unit, TB04, is used to connect the board to the other SCXI boards in the rack and to the UUT.

The wiring of TB04 is described in section 3.1.5.

A circuit diagram, layout and parts list is attached to this manual as Appendix A.

3.1.5. SCXI WIRING LIST

A wiring list of the SCXI loom is given in Appendix B which is attached to this manual.

The loom connects the following items :-

- TB01
- TB02
- TB03
- TB04
- P211S, 15 way socket which mates with SSH/J211P.
- P212S, 44 way socket which mates with SSH/J212P.
- P221S, 15 way socket which mates with SVA/J221P.
- Power Supply Unit

3.2. COMPUTER AND ACCESSORIES

3.2.1. COMPUTER

A Prologue Pentium desk top computer is used to run the test equipment software.

The computer is fitted with three internal boards :-

- IEEE Board
- Data Acquisition Board
- Stepper Control Board

3.2.2. IEEE BOARD

The IEEE board allows the computer to automatically control the power supply to :-

- Set output voltage
- Set output current limit
- Switch the output on and off when necessary

A standard IEEE cable is used to connect the PSU to the computer.

It should be noted that the power supply output is always switched off before reconfiguring any of the SCXI relays. In this manner the stress on the relays is minimised and the relay life is maximised.

3.2.3. DATA ACQUISITION BOARD

The Data Acquisition Board, National Semiconductor AT-MIO E Series, interfaces with the SCXI rack via a National Semiconductor SCXI 1349 cable.

3.2.4. STEPPER CONTROL BOARD

The Stepper Controller Board, National Semiconductor pcStep 4A interfaces with SCXI_1180/81 based stepper drive board via a ribbon cable.

It should be noted that the red stripe on the ribbon cable should be at the top.

4. SOFTWARE DEFINITION

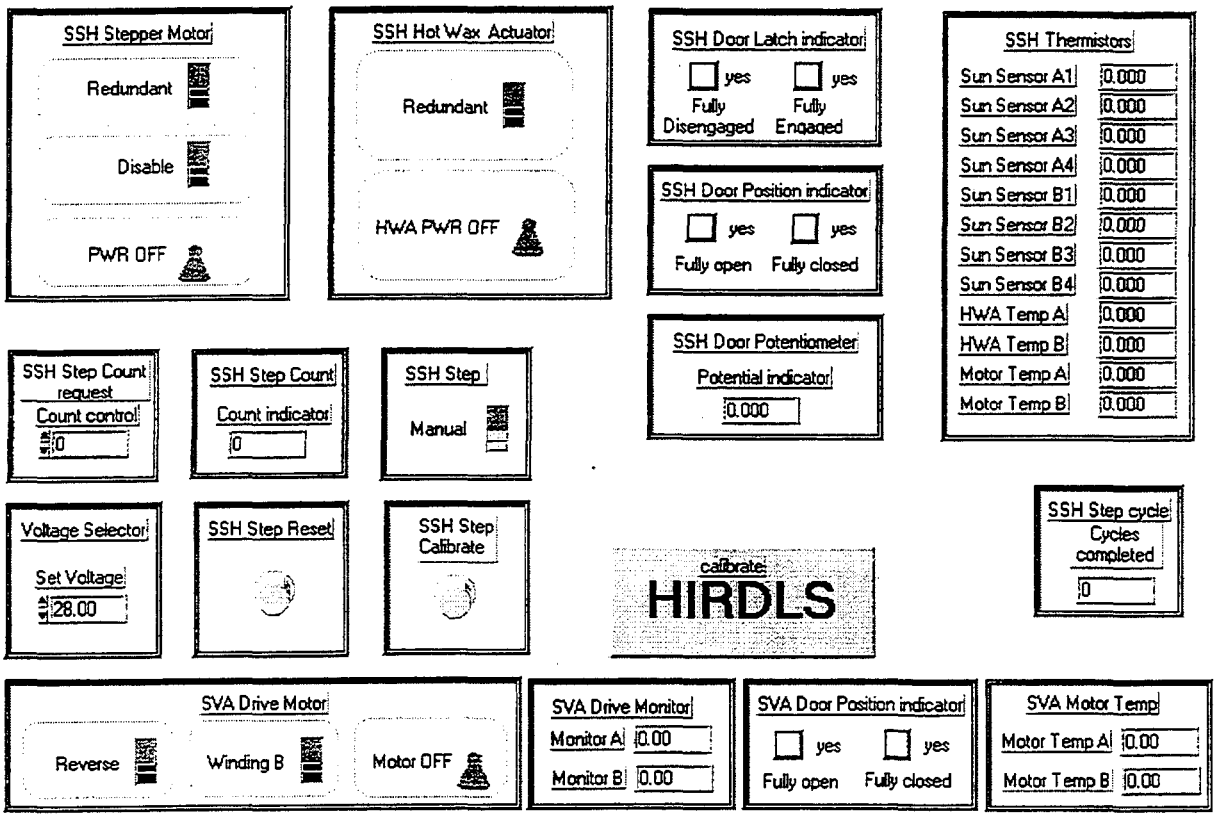

Fig 4.0-1 HIRDLS main operating panel

4.1. OPERATING INSTRUCTIONS

A picture of the normal operating screen is shown in Figure 4.0-1.

The screen is broken down into the following functional blocks :-

4.1.1. SSH Stepper Motor Block

- 'Redundant/Prime' Selector Switch : selects prime or redundant stepper motor winding.
- 'Disable/Enable' Selector Switch : enables and disables the outputs of the stepper drive amplifier.
- 'PWR ON/PWR OFF' Selector Switch : switches PSU power to the stepper drive circuitry.

4.1.2. SSH Hot Wax Actuator Block

- 'Redundant/Prime' Selector Switch : selects prime or redundant hot wax heater winding.
- 'HWA PWR ON/HWA PWR OFF' Selector Switch : switches PSU power to the HWA circuitry.

4.1.3. SSH Door Latch Indicator Block

- 'Fully Disengaged Yes/No' : 'Yes' indicates fully disengaged, 'No' indicates not fully disengaged and a flashing indicator signifies a fault.
- 'Fully Engaged Yes/No' : 'Yes' indicates fully engaged, 'No' indicates not fully engaged and a flashing indicator signifies a fault.

4.1.4. SSH Door Position Indicator Block

- 'Fully Open Yes/No' : 'Yes' indicates fully open, 'No' indicates not fully open and a flashing indicator signifies a fault.
- 'Fully Closed Yes/No' : 'Yes' indicates fully closed, 'No' indicates not fully closed and a flashing indicator signifies a fault.

4.1.5. SSH Door Potentiometer Block

- Indicates the voltage on the door position potentiometer. It has a overall range of 0V to +10V.

4.1.6. SSH Thermistor Block

- Sun Sensor A1 : calibrated in °C for a 12 k Ohms thermistor.
- Sun Sensor A2 : calibrated in °C for a 12 k Ohms thermistor.
- Sun Sensor A3 : calibrated in °C for a 12 k Ohms thermistor.
- Sun Sensor A4 : Not fitted, ignore reading.
- Sun Sensor B1 : calibrated in °C for a 12 k Ohms thermistor.
- Sun Sensor B2 : calibrated in °C for a 12 k Ohms thermistor.
- Sun Sensor B3 : calibrated in °C for a 12 k Ohms thermistor.
- Sun Sensor B4 : Not fitted, ignore reading.
- HWA Temp A : calibrated in °C for an AD590 temperature sensor.
- HWA Temp B : calibrated in °C for an AD590 temperature sensor.
- Motor Temp A : calibrated in °C for an AD590 temperature sensor.
- Motor Temp B : calibrated in °C for an AD590 temperature sensor.

4.1.7. SSH Step Count Request Block

- allows manual loading of desired step count which is initiated when the 'enter' is pressed. Note that stepper power and enable switches must be in an operational position for correct operation. One step count equals 0.1 mechanical degrees of door movement with positive being in the direction of the opening door.

4.1.8. SSH Step Count Block

- Displays the current step count.

4.1.9. SSH Step Block

- Allows selection of manual or automatic step count control. Automatic step control is used for life testing in the thermal vacuum chamber.

4.1.10. Voltage Selector Block

- Allows the PSU voltage to be set, via the IEEE bus, from the computer front panel.

4.1.11. SSH Step Reset Block

- Resets the counter on the stepper drive board to its reference position at zero electrical degrees.

4.1.12. SSH Step Calibrate Block

- Allows the initiation of the automatic calibration of the door potentiometer against stepper motor steps.

4.1.13. HIRDLS Calibrate Block

- Allows thermistor data to be added
- See section on CALIBRATION PANEL

4.1.14. SVA Drive Motor Block

- 'Reverse/Forward' Selector Switch : selects reverse or forward SVA motor operation.
- 'Winding A/Winding B' Selector Switch : selects SVA motor winding.
- 'Motor ON/Motor OFF' Selector Switch : switches PSU power to the SVA motor.

4.1.15. SVA Drive Monitor Block

- Monitor A : displays the SVA motor voltage after the 'Motor ON/Motor OFF' switch but before the 'Reverse/Forward' and 'Winding A/Winding B' switches.
- Monitor B : not used.

4.1.16. SVA Door Position Indicator Block

- 'Fully Open Yes/No' : 'Yes' indicates fully open, 'No' indicates not fully open and a flashing indicator signifies a fault.
- 'Fully Closed Yes/No' : 'Yes' indicates fully closed, 'No' indicates not fully closed and a flashing indicator signifies a fault.

4.1.17. SVA Motor Temperature

- Motor Temp A : calibrated in °C for an AD590 temperature sensor.
- Motor Temp B : calibrated in °C for an AD590 temperature sensor.

4.2. CALIBRATION PANEL

While the application is running HIRDLS Calibrate Enable button pulls up the "Calibration Panel" and is shown in the figure below. Each of the variables may be changed by selection with the mouse pointer or typing the value in directly. The values will not affect the real values stored as a file or as a global value until the close button is pressed. A dialogue box is opened in which acceptance or rejection of the values just typed in can be given. If the reject button is pressed all the values just typed in will be ignored reverting back to the original set of values displayed and the "Calibration Panel" will exit. However, if the accept button is pressed, all values that have been changed will modify both the global store and the calibration file.

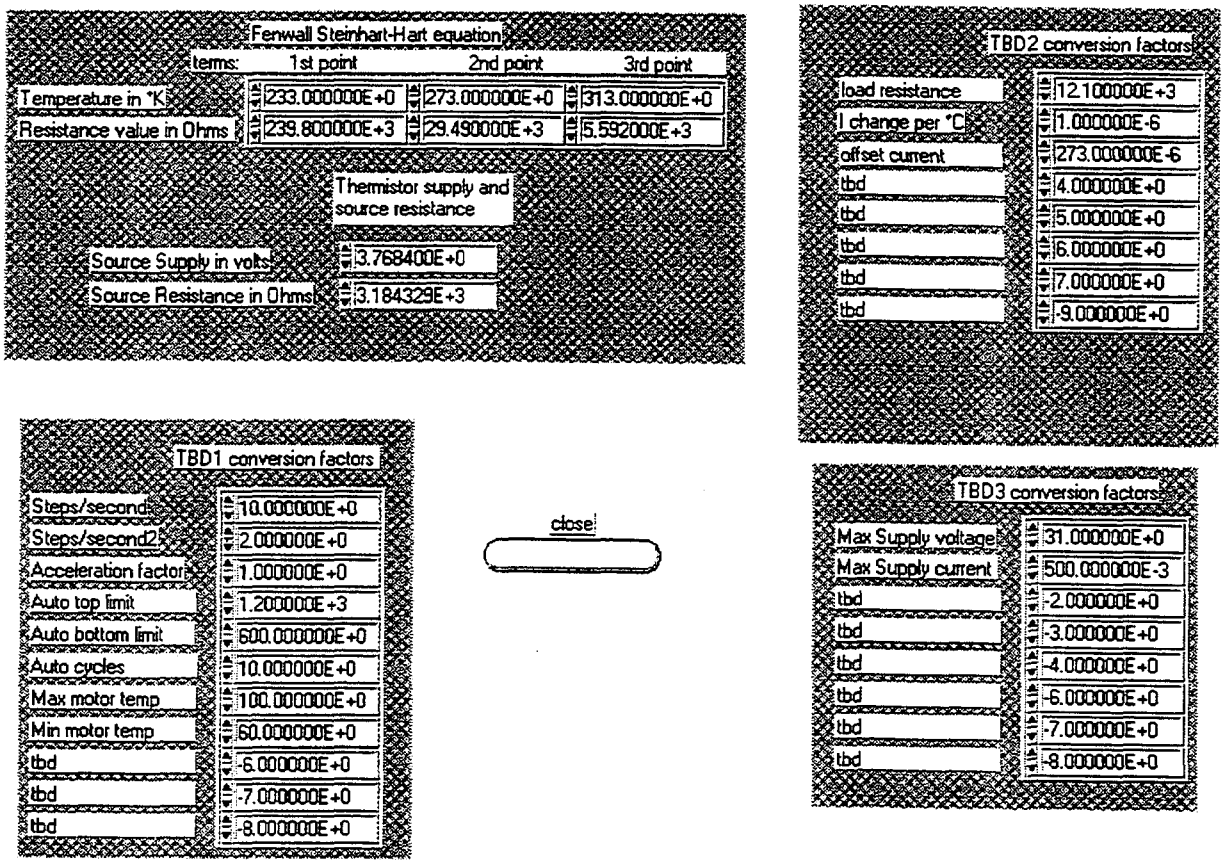

Fig 4.2.-1 HIRDLS Calibration panel

4.2.1. Thermistor Calibration

The thermistors that are being used are all assumed to be of similar type with respect to their resistance characteristics. Calibration of the thermistor is achieved by supplying the published resistance values at three temperatures, the supply voltage and the supply source resistance. The values are entered into the panel and the close button is pressed accepting the change in the panel values.
Within the software an equation known as the "Steinhart-Hart equation", which was supplied by Fenwall, has been used to model the thermistor characteristics and provides a very good approximation to the published data (<0.1°C error over the range -55°C to +100°C). The table below shows the values for the 15kΩ Fenwall thermistor.

	1st point	2nd point	3rd point
Temperature	233°K	273°K	313°K
Resistance value	239.8kΩ	29.49kΩ	5.592kΩ

In addition to the 3 point calibration, the value of the conditioning resistor and the conditioning voltage in the EGSE are entered.

These values are:

Source Supply Voltage	3.768
Conditioned Resistance	3.184kΩ

4.2.2. Stepper Motor values

The stepper motor is set up in the "TBD1 conversion factor" array area and are as follows:-

Steps/second	This is the stepping rate per second.
Steps/second 2	Acceleration; how fast the step rate is attained.
Acceleration factor	see the manual for greater detail.
Auto top limit	This is the number of 0.1 degree steps and is an absolute value from zero. Zero degrees is when the door is fully closed. All positive values in degrees represent the door open.
Auto bottom limit	This is similar to the "Auto top limit" but it is the bottom value.
Auto cycles	This is the number of cycles the door goes into the open position within an automatic test. Once a test is initiated it will automatically finish when it has completed the correct number of cycles. Or it can be stopped with the front panel abort button at the top left hand side of the screen.
Max motor temp	This is the upper temperature limit at which the stepper drive will be removed.
Min motor temp	This is the lower temperature limit at which the stepper will start to operate once the upper limit has been exceeded.

4.2.3. Semiconductor Temperature Sensors

The semiconductor temperature sensors are defined in "TBD2 conversion factors" and are as follows:-

load resistance	This is the load resistance that is used to monitor the temperature dependant current from the sensor. (Fixed at 12.1k Ohms)
I change per °C	The sensor current change per °C. The device characteristics are set at 1uA per °C.
offset current	If and offset exists this parameter can be used to cancel it out. However, to convert the display from °K to °C set the offset to 273uA. (Present setting)

4.2.4. Maximum Supply Voltage and Current

The programmable supply can have the maximum voltage and current set as follows:-

Max Supply voltage	This sets the over voltage trip within the programmable power supply and is currently set at 31volts.
Max Supply current	This sets the over current trip within the programmable power supply and is currently set at 0.5 Amps.

5. SAFETY

In order to prevent danger and/or injury, personnel must be qualified to a competent test engineering standard and they should be aware of the following potential hazards and be familiar with the general safety regulations where applicable to electrical equipment.

5.1. EARTHING OF EQUIPMENT

Ensure that Test Equipment is earthed to any externally connected units.

5.2. MAINS OPERATING VOLTAGE

The Test Set operates with the following mains supply specification.

Voltage 220V
Frequency 50Hz

5.3. EMERGENCY OFF

Not applicable.

5.4. PRECAUTIONS

1. Always ensure ribbon cable from the back of computer to the SCXI rack has red stripe at the top.

2. When connecting power supply double check polarity. The red wire should be positive. Protection has been provided against incorrect polarity but it is best not to use it.

3. Switch on in the following order :-
   - Computer
   - SCXI rack
   - Power Supply Unit when software running

6. TECHNICAL

6.1. PERFORMANCE REQUIREMENTS

Performance requirements consistent with Applicable Documents reference 1 and 2.

6.2. ENVIRONMENTAL CONSIDERATIONS

The EGSE shall be operated within the temperature limits 22 ± 3°C and a humidity range 50±10% and a cleanliness class of 100,000 or better.

6.3. PORTABILITY

The constituent parts of the PC are consistent with normal office equipment handling.

6.4. RELIABILITY REQUIREMENTS

None specified.

6.5. MAINTAINABILITY REQUIREMENTS

When not in use the EGSE shall be bagged in polythene with a desiccant drying agent inside. Storage shall be in temperatures 10° - 30°C.

6.6. PHYSICAL

Mass	PC + Monitor	31kg
	Main Rack	6 kg
	Keyboard	0.5 kg
	Power Supply	22 kg
	Cables	1 kg

Dimensions	PC	165mm x 419mm x 419mm
	Monitor	419mm x 419mm x 432mm
	Main Rack	438mm x 212mm x 176mm
	Keyboard	38mm x 457mm x 165mm
	Power Supply	420mm x 495mm x 127mm
	Cables	2000mm to 3000mm

6.7. TRANSPORT

TBD by customer.

7. APPENDIX A

STEPPER DRIVE BOARD

- Circuit Diagram
- Layout
- Parts List

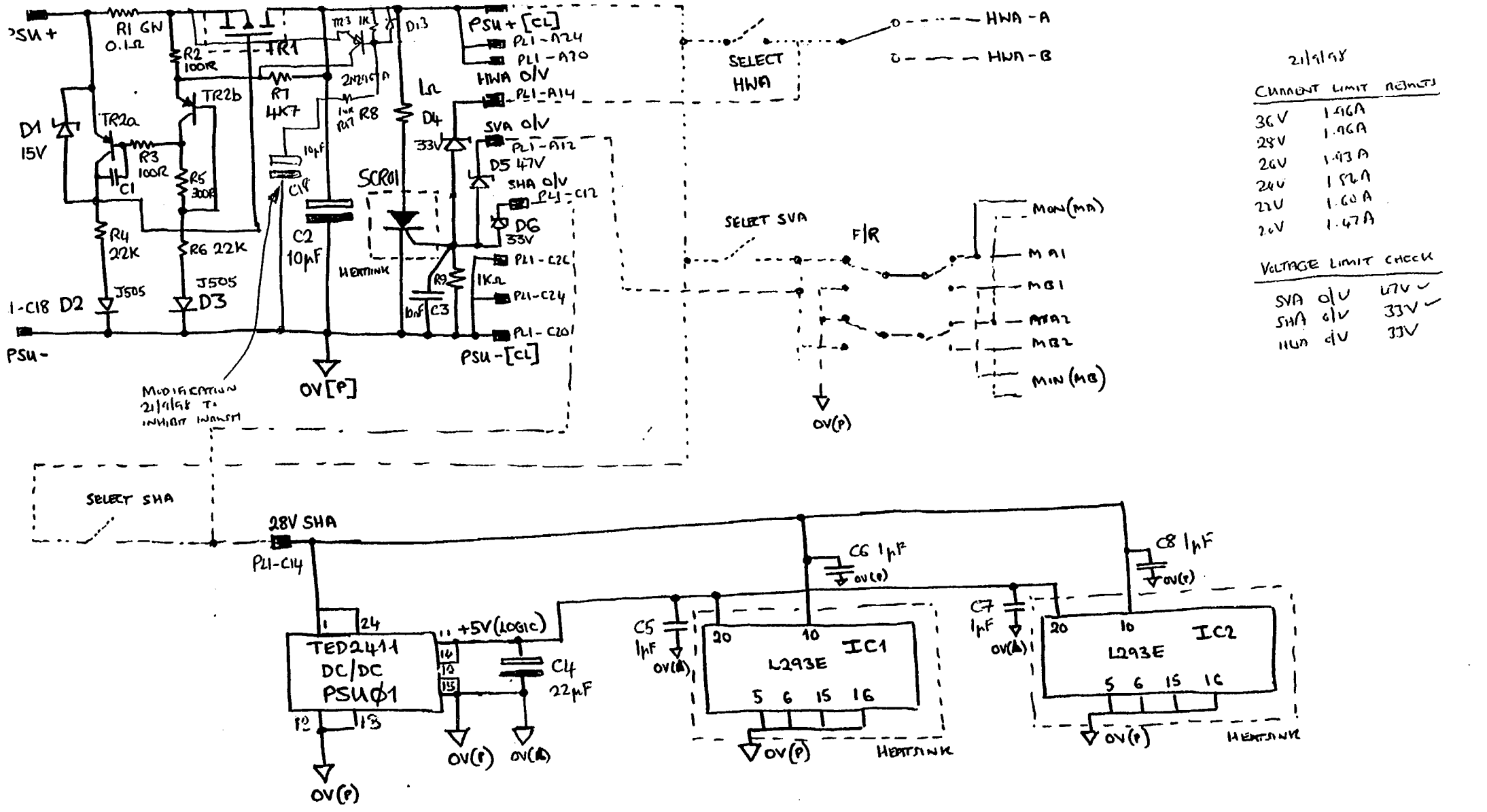

21/9/98

CURRENT LIMIT RESULTS	
36V	1.96A
28V	1.96A
26V	1.93A
24V	1.92A
22V	1.60A
20V	1.47A

VOLTAGE LIMIT CHECK		
SVA	O/V	47V ✓
SHA	O/V	33V ✓
HWA	O/V	33V

A2

SHEET 1 OF 3

JIM WATKINS 27/8/98

CIRCUIT DIAGRAM OF STEPPER DRIVE CIRCUITRY + CURRENT LIMIT

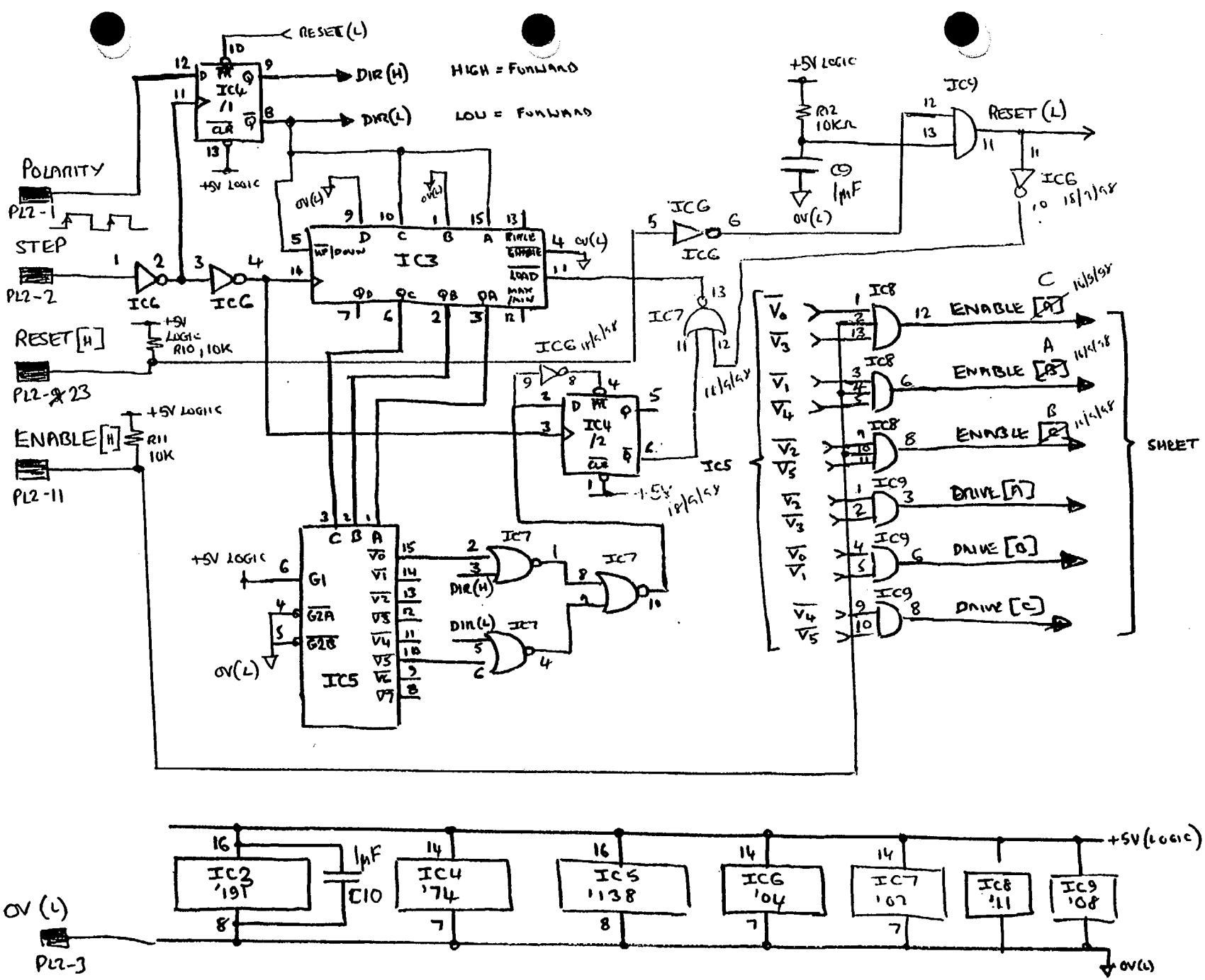

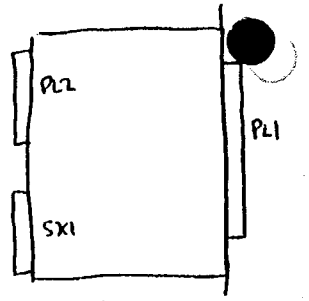

PIN ALLOCATION

1	PSU +VE	PL1 - A18
2	PSU -VE	PL1 - C18
3	PSU +VE (CL)	PL1 - A26
4	PSU +VE (CL)	PL1 - A24
5	PSU +VE (CL)	PL1 - A20
6	PSU -VE (CL)	PL1 - C26
7	PSU -VE (CL)	PL1 - C24
8	PSU -VE (CL)	PL1 - C20
9	HVA 0/V	PL1 - A14
10	0VA 0/V	PL1 - A12
11	SHA 0/V	PL1 - C12
12	+28V SHA	PL1 - C14
13	POLARITY	PL2 - 1
14	STEP	PL2 - 2
15	RESET (H)	PL2 - 9
16	ENABLE (H)	PL2 - 11
17	PHASE A	PL1 - A32
18	PHASE B	PL1 - A30
19	PHASE C	PL1 - C32
20	+5V (DIG)	PL1 - A6
21	0V (DIG)	PL1 - C6
22	+10V (POT)	PL1 - A5 *
23	0V (POT)	PL1 - C5 *
24	+10V (THERM)	PL1 - A4 *
25	0V (THERM)	PL1 - C4 *
26	+10V (AD590)	PL1 - A3 *
27	0V (AD590)	PL1 - C3 *
28	0V (L)	PL2 - 3

* GLUE ON TERMINAL BLOCKS.

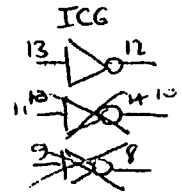

SHEET 2 of 3

J. K. Watkins 27/8/98

CIRCUIT DIAGRAM OF STEPPER MOTOR CIRCUITRY
+ CURRENT LIMIT

SHEET 2

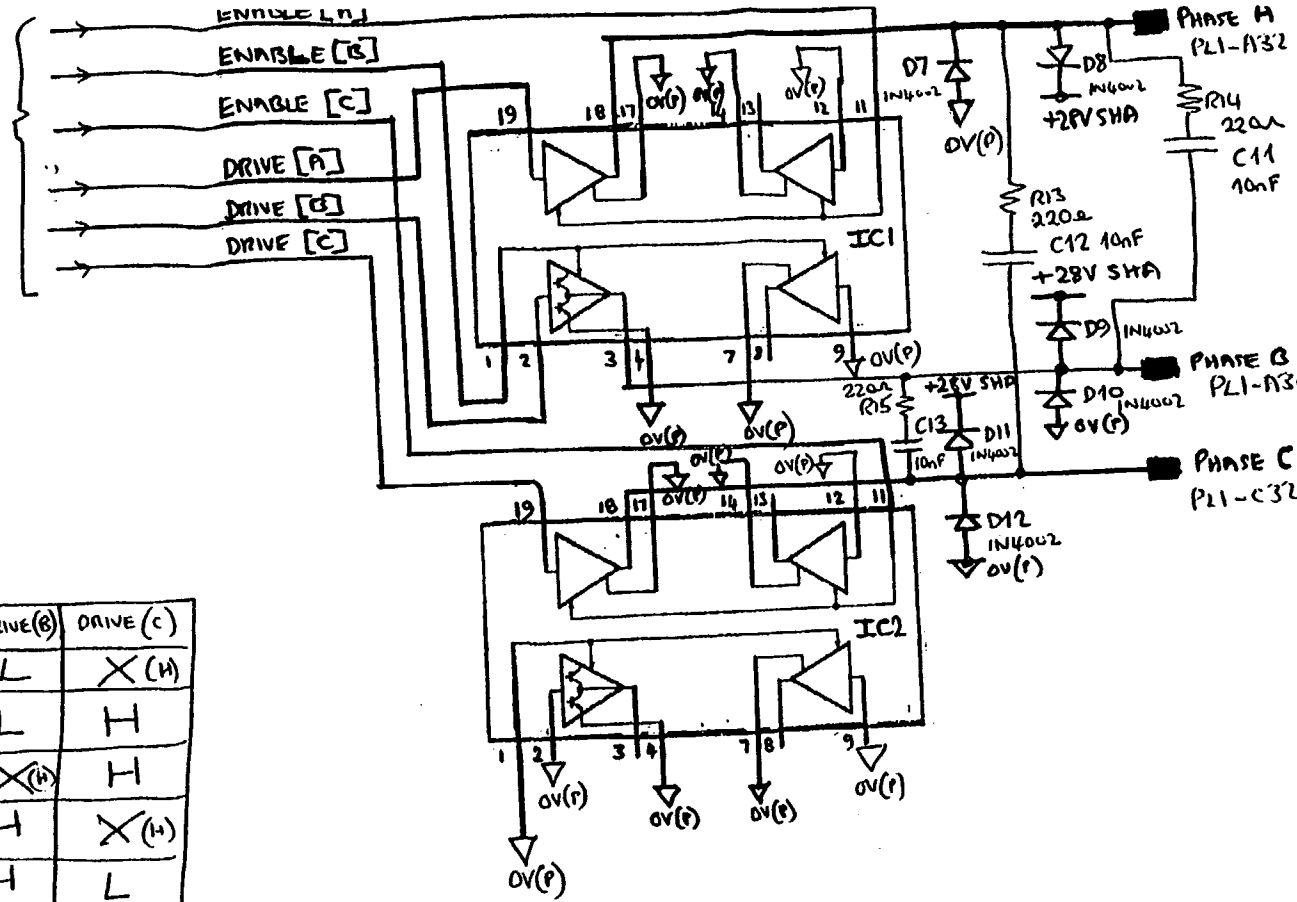

TRUTH TABLE

STEP	A	B	C	ENABLE(A)	ENABLE(B)	ENABLE(C)	DRIVE(A)	DRIVE(B)	DRIVE(C)
1	+	−	N/C	H	H	L	H	L	X (H)
2	N/C	−	+	L	H	H	X (H)	L	H
3	−	N/C	+	H	L	H	L	X (H)	H
4	−	+	N/C	H	H	L	L	H	X (H)
5	N/C	+	−	L	H	H	X (H)	H	L
6	+	N/C	−	H	L	H	H	X (H)	L

X = DO NOT CARE

IF ENABLE = L THEN ENABLE [A][B][C] = LOW

AL

J. K. WATKINS 27/2/98

SHEET 3 OF 3

CIRCUIT DIAGRAM OF STEPPER DRIVE CIRCUITRY + CHANNEL UNIT

BOARD LAYOUT

APPROXIMATE STEPPER MOTOR LAYOUT

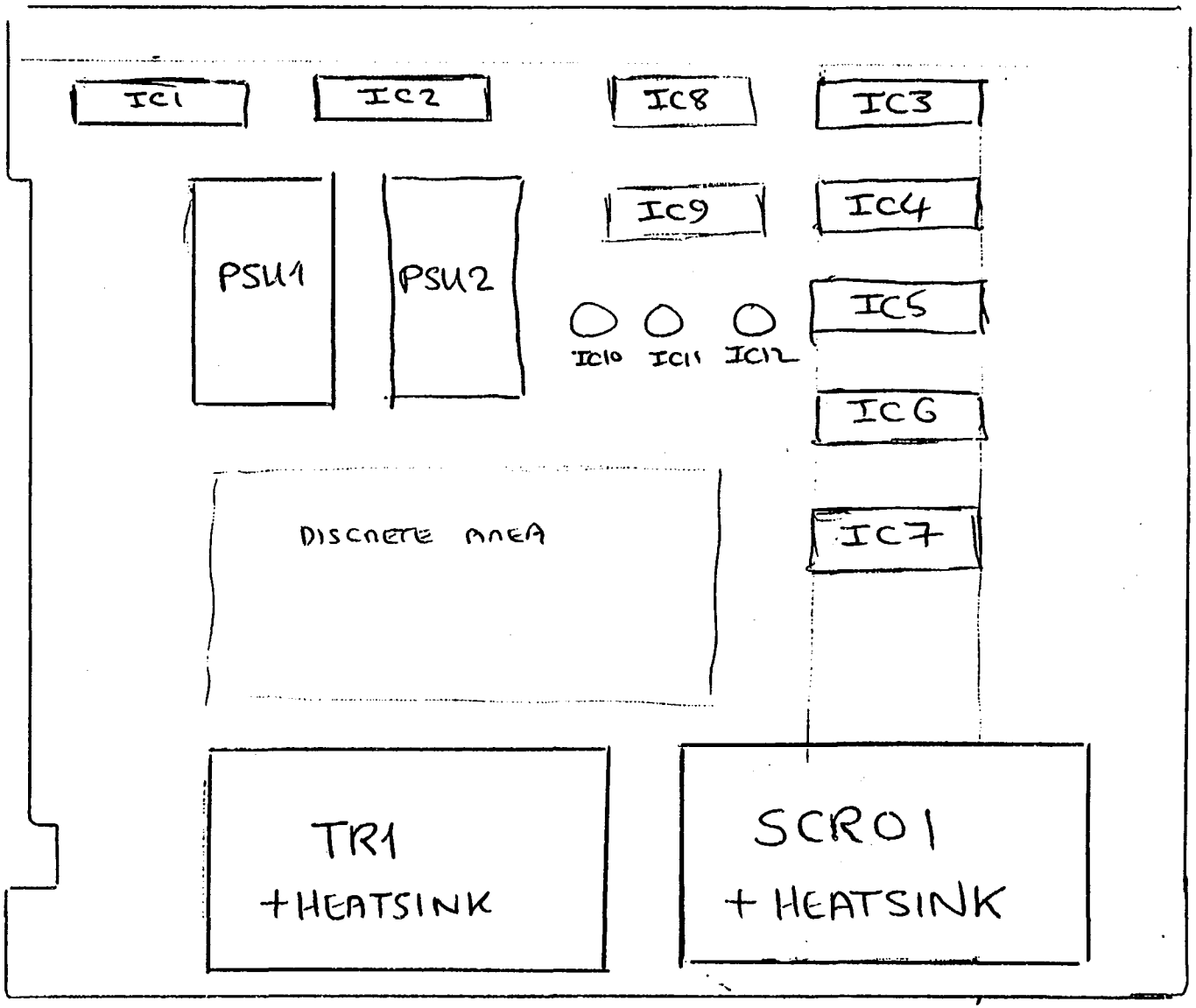

AG

PARTS LIST

INTEGRATED CIRCUITS :-

IC1 *	L293E	PUSH PULL FOUR CHANNEL DRIVERS	RS 659-851
IC2 *	L293E	" " " " "	RS 659-851
IC3	74HCT191	UP/DOWN COUNTER	RS 652-131
IC4	74HCT74	FLIP/FLOP, D TYPE	RS 633-98
IC5	74HCT138	3 TO 8 DECODER	RS 301-43
IC6	74HCT04	INVERTER, HEX	RS 301-369
IC7	74HCT02	NOR GATES	RS 633-903
IC8	74HCT11	3 I/P AND	RS 301-397
IC9	74HCT08	2 I/P AND	RS 301-375
IC10	AD581KH		RS 411-595
IC11	AD581KH		RS 411-595
IC12	AD581KH		RS 411-595

* HEATSINKS ATTACHED

2 OFF RS 402-513 CLIP ON HEATSINK

1 OFF HEATSINK BONDER RS 850-984

[IN CASE CLIP NOT BIG ENOUGH]

DC-DC CONVERTER :-

PSU Ø1	TED 2411	RS 114-5609
PSU Ø2	TED 2411	RS 114-5609

MOSFETS :-

TR1	IRFP9140	RS 189-0949
TR3	2N2907A (PNP BIPOLAR)	STORES
* HEATSINK FOR ABOVE		RS 402-995

DUAL TRANSISTOR

TR2	2N3810A	FROM STOCKS

SCR

SCR01	X0402DE SCR	FARNELL 706-024
* HEATSINK FOR ABOVE		RS 402-995

DIODES

A8

D1	15V ZENER DIODE	RS 283-744
D2	1mA CONSTANT CURRENT DIODE J505	RS 283-47[illegible]
D3	1mA CONSTANT CURRENT DIODE J505	RS 283-479
D4	33V ZENER DIODE	RS 283-788
D5	47V ZENER DIODE	RS 283-801
D6	33V ZENER DIODE	RS 283-788
D7	MEDIUM POWER DIODE 1N4002	RS 261-152
D8		
D9		
D10		
D11		
D12		
D13	GP DIODE	IN4148

RESISTORS

A9

R1	0.1Ω, RESISTOR, 6WATT	RS199-6378
R2	100R, RESISTOR, 1/4WATT	RS 148-269
R3	100R, RESISTOR, 1/4 WATT	RS 148-269
R4	22K RESISTOR, 1/4 WATT	RS 148-815
R5	300R, RESISTOR, 1/4 WATT	RS 148-376
R6	22K RESISTOR, 1/4 WATT	RS 148-815
R7	4K7, RESISTOR, 6WATT	RS 199-6586
R8	1Ω, RESISTOR, 6 WATT	RS 199-6429
R9	1KΩ, RESISTOR, 1/4 WATT	RS 148-506
R10	10KΩ, RESISTOR, 1/4 WATT	RS 148-736
R11	10KΩ, RESISTOR, 1/4 WATT	RS 148-736
R12	10KΩ, RESISTOR, 1/4 WATT	RS 148-736
R13	220Ω, RESISTOR, 1/4 WATT	RS 148-348
R14	220Ω, RESISTOR, 1/4 WATT	RS 148-348
R15	220Ω, RESISTOR, 1/4 WATT	RS 148-348
R16	1KΩ, RESISTOR, 1/8 WATT	STOCK
R17	10KΩ, RESISTOR, 1/8 WATT	STOCK

CAPACITORS

A1C

C1	10nF CERAMIC, 100V	RS	125-777
C2	10μF, ALUMINIUM, 100V	RS	493-93[illegible]
C3	10nF CERAMIC, 100V	RS	125-777
C4	22μF, ALUMINIUM, 25V	RS	493-733
C5	1μF CERAMIC, 100V	RS	126-067
C6	1μF CERAMIC, 100V	RS	126-067
C7	1μF CERAMIC, 100V	RS	126-067
C8	1μF CERAMIC, 100V	RS	126-067
C9	1μF CERAMIC, 100V	RS	126-067
C10	1μF CERAMIC, 100V	RS	126-06[illegible]
C11	10nF CERAMIC, 100V	RS	125-777
C12	10nF CERAMIC, 100V	RS	125-777
C13	10nF CERAMIC, 100V	RS	125-777
C14	22μV, ALUMINIUM, 25V	RS	493-733
C15	~~0.1μ~~ 1μF, CERAMIC, 100V	RS	126-067
C16	1μF, CERAMIC, 100V	RS	126-067
C17	1μF, CERAMIC, 100V	RS	126-067
C18	10μF, ALUMINIUM, 100V	RS	493-9[illegible]

8. APPENDIX B

SCXI Wiring List

File : Scxihar.xls
Socket P212S : SSH Transducer and Tellback Interface

P212S	Function	Destn	Wire Groups	Wire Type	Comments
1	SSH Sun Sensor B Cable Shield	Shield	Grouped with 1,2,17,18,31,32	5TS26	
2	SSH Sun Sensor B Cathode 2	TB01/CH7+	Grouped with 1,2,17,18,31,32	5TS26	
17	SSH Sun Sensor B Cathode 1	TB01/CH6+	Grouped with 1,2,17,18,31,32	5TS26	
18	SSH Sun Sensor B Cathode 4	TB01/CH9+	Grouped with 1,2,17,18,31,32	5TS26	
31	SSH Sun Sensor B Anodes	TB01/CH18-	Grouped with 1,2,17,18,31,32	5TS26	
32	SSH Sun Sensor B Cathode 3	TB01/CH8+	Grouped with 1,2,17,18,31,32	5TS26	
11	SSH Latch Fully Disengaged uSw N.C.	TB02/T4	Grouped with 11,27,41	3TS26	connect Shield to backshell
27	SSH Latch Fully Disengaged uSw Com	TB02/T15	Grouped with 11,27,41	3TS26	connect Shield to backshell
41	SSH Latch Fully Disengaged uSw N.O.	TB02/CH2+	Grouped with 11,27,41	3TS26	connect Shield to backshell
12	SSH Door Fully Closed uSw N.C.	TB02/T5	Grouped with 12,28,42	3TS26	connect Shield to backshell
28	SSH Door Fully Closed uSw Com	TB02/T15	Grouped with 12,28,42	3TS26	connect Shield to backshell
42	SSH Door Fully Closed uSw N.O.	TB02/T6	Grouped with 12,28,42	3TS26	connect Shield to backshell
13	SSH Latch Fully Engaged uSw N.C.	TB02/T8	Grouped with 13,29,43	3TS26	connect Shield to backshell
29	SSH Latch Fully Engaged uSw Com	TB02/T16	Grouped with 13,29,43	3TS26	connect Shield to backshell
43	SSH Latch Fully Engaged uSw N.O.	TB02/T7	Grouped with 13,29,43	3TS26	connect Shield to backshell
14	SSH Door Fully Open uSw N.C.	TB02/T11	Grouped with 14,30,44	3TS26	connect Shield to backshell
30	SSH Door Fully Open uSw Com	TB02/T16	Grouped with 14,30,44	3TS26	connect Shield to backshell
44	SSH Door Fully Open uSw N.O.	TB02/T10	Grouped with 14,30,44	3TS26	connect Shield to backshell
21	SSH Motor Temperature B Drive	TB01/CH19+	Grouped with 21,22	2TS26	connect Shield to backshell
22	SSH Motor Temperature B Sense	TB01/CH13+	Grouped with 21,22	2TS26	connect Shield to backshell
3	SSH Sun Sensor A Cable Shield	Shield	Grouped with 3,4,19,20,33,34	5TS26	
4	SSH Sun Sensor A Cathode 2	TB01/CH3+	Grouped with 3,4,19,20,33,34	5TS26	
19	SSH Sun Sensor A Cathode 1	TB01/CH2+	Grouped with 3,4,19,20,33,34	5TS26	
20	SSH Sun Sensor A Cathode 4	TB01/CH5+	Grouped with 3,4,19,20,33,34	5TS26	
33	SSH Sun Sensor A Anodes	TB01/CH18-	Grouped with 3,4,19,20,33,34	5TS26	
34	SSH Sun Sensor A Cathode 3	TB01/CH4+	Grouped with 3,4,19,20,33,34	5TS26	
35	SSH Motor Temperature A Drive	TB01/CH19+	Grouped with 35,36	2TS26	connect Shield to backshell
36	SSH Motor Temperature A Sense	TB01/CH12+	Grouped with 35,36	2TS26	connect Shield to backshell
5	SSH HWA Temperature A Drive	TB01/CH19+	Grouped with 5,6	2TS26	connect Shield to backshell
6	SSH HWA Temperature A Sense	TB01/CH10+	Grouped with 5,6	2TS26	connect Shield to backshell
7	SSH HWA Temperature B Drive	TB01/CH19+	Grouped with 7,8	2TS26	connect Shield to backshell
8	SSH HWA Temperature B Sense	TB01/CH11+	Grouped with 7,8	2TS26	connect Shield to backshell

B2

File : Scxihar.xls

Socket P212S : SSH Transducer and Tellback Interface

P212S	Function	Destn	Wire Groups	Wire Type	Comments
9	SSH Door Position Sensor Cable Shield	Shield	Grouped with 9,24,25,39	3TS26	
24	SSH Door Position Sensor Drive	TB01/CH17+	Grouped with 9,24,25,39	3TS26	
25	SSH Door Position Sensor Return	TB01/CH16-	Grouped with 9,24,25,39	3TS26	
39	SSH Door Position Sensor Wiper	TB01/CH16+	Grouped with 9,24,25,39	3TS26	
10	Spare				
15	Spare				
16	Spare				
23	Spare				
26	Spare				
37	Spare				
38	Spare				
40	Spare				

B3

File : Scxihar.xls

Socket P211S : SSH Actuator Interface

P211S	Function	Destn	Wire Groups	Wire Type	Comments
3	SSH HWA Shield	Shield	Common to HWA A,B	2TS22	
1	SSH HWA Heater A Drive	TB03/NC(6)	Grouped with 1, 11, 3	2TS22	
11	SSH HWA Heater A Return	TB03/COM(13)	Grouped with 1, 11, 3	2TS22	
2	SSH HWA Heater B Drive	TB03/NO(6)	Grouped with 2, 6, 3	2TS22	
6	SSH HWA Heater B Return	TB03/COM(13)	Grouped with 2, 6, 3	2TS22	
7	SSH Motor A Phase 1 Drive (Yel)	TB03/NC(9)	Grouped with 7,12,13,8	3TS24	
8	SSH Drive Motor A Shield	Shield	Grouped with 7,12,13,8	3TS24	
12	SSH Motor A Phase 2 Drive (Red)	TB03/NC(10)	Grouped with 7,12,13,8	3TS24	
13	SSH Motor A Phase 3 Drive (Wht)	TB03/NC(11)	Grouped with 7,12,13,8	3TS24	
9	SSH Motor B Phase 1 Drive (Yel)	TB03/N0(9)	Grouped with 9,10,14,15	3TS24	
10	SSH Motor B Shield	Shield	Grouped with 9,10,14,15	3TS24	
14	SSH Motor B Phase 2 Drive (Red)	TB03/NO(10)	Grouped with 9,10,14,15	3TS24	
15	SSH Motor B Phase 3 Drive (Wht)	TB03/NO(11)	Grouped with 9,10,14,15	3TS24	
4	Spare				
5	Spare				

B4

File : Scxihar.xls

Socket P221S : SVA Interface

P221S	Function	Destn	Wire Groups	Wire Type	Comments
1	SVA Motor Temp A Drive	TB01/CH19+	Grouped with 1,6	2TS26	shield unconnected, build problem
6	SVA Motor Temp A Sense	TB01/CH0+	Grouped with 1,6	2TS26	shield unconnected, build problem
2	SVA Door Fully Open uSw N.C.	TB02/T1	Grouped with 2,8,13	3TS26	shield unconnected, build problem
8	SVA Door Fully Open uSw N.O.	TB02/CH1+	Grouped with 2,8,13	3TS26	shield unconnected, build problem
13	SVA Door Fully Open uSw Com	TB02/T14	Grouped with 2,8,13	3TS26	shield unconnected, build problem
11	SVA Motor Drive Shield	Shield	Grouped with 3,14 and 4,9		
3	SVA Motor Winding A Drive	TB03/NC(3)	Grouped with 3,14,11	2TS24	
14	SVA Motor Winding A Return	TB03/NC(4)	Grouped with 3,14,11	2TS24	
4	SVA Motor Winding B Drive	TB03/NO(3)	Grouped with 4,9,11	2TS24	
9	SVA Motor Winding B Return	TB03/NO(4)	Grouped with 4,9,11	2TS24	
5	SVA Door Fully Closed uSw N.O.	TB02/T3	Grouped with 5,10,15	3TS26	shield unconnected, build problem
10	SVA Door Fully Closed uSw Com	TB02/T14	Grouped with 5,10,15	3TS26	shield unconnected, build problem
15	SVA Door Fully Closed uSw N.C.	TB02/T2	Grouped with 5,10,15	3TS26	shield unconnected, build problem
7	SVA Motor Temp B Drive	TB01/CH19+	Grouped with 7,12	2TS26	shield unconnected, build problem
12	SVA Motor Temp B Sense	TB01/CH1+	Grouped with 7,12	2TS26	shield unconnected, build problem

B5

File : Scxihar.xls

+70V Power Supply

Item	70V PSU	Function	Destn	Wire Groups	Wire Type	Comments
1	+	PSU Positive	TB04/CH5+	Grouped with +/-	2T22	
2	-	PSU Negative	TB04/CH5-	Grouped with +/-	2T22	

B6

File : Scxihar.xls

Analogue Terminal Block :Based on SCXI1300 + Resistor Board + Additional Terminals

Item	Terminal Block 1	Function	Destn	Wire Groups	Wire Type	Comments
1	CH0 -	Internal 0V (AD490) Bus	Various	Daisy Chained to CH19-	24AWG	
2	CH0 +	SVA Motor Temp A Sense	P221S/6	Grouped with CH0+, CH19+, FL1	2TS26	
			R1-2	Single	24AWG	
3	CH1 -	Internal 0V (AD490) Bus	Various	Daisy Chained to CH19-	24AWG	
4	CH1 +	SVA Motor Temp B Sense	P221S/12	Grouped with CH1+, CH19+, FL1	2TS26	
			R2-2	Single	24AWG	
5	CH2 -	Internal 0V (Therm) Bus	Various	Daisy Chained to CH18-	24AWG	
6	CH2+	SSH Sun Sensor A Cathode 1	P212S/19	CH18-, FL1, CH2+, CH3+, CH4+, CH5+	5TS26	
			R7/R8	Single	24AWG	
7	CH3 -	Internal 0V (Therm) Bus	Various	Daisy Chained to CH18-	24AWG	
8	CH3 +	SSH Sun Sensor A Cathode 2	P212S/4	CH18-, FL1, CH2+, CH3+, CH4+, CH5+	5TS26	
			R9/R10	Single	24AWG	
9	CH4 -	Internal 0V (Therm) Bus	Various	Daisy Chained to CH18-	24AWG	
10	CH4 +	SSH Sun Sensor A Cathode 3	P212S/34	CH18-, FL1, CH2+, CH3+, CH4+, CH5+	5TS26	
			R11/R12	Single	24AWG	
11	CH5 -	Internal 0V (Therm) Bus	Various	Daisy Chained to CH18-	24AWG	
12	CH5+	SSH Sun Sensor A Cathode 4	P212S/20	CH18-, FL1, CH2+, CH3+, CH4+, CH5+	5TS26	
			R13/R14	Single	24AWG	
13	CH6 -	Internal 0V (Therm) Bus	Various	Daisy Chained to CH18-	24AWG	
14	CH6 +	SSH Sun Sensor B Cathode 1	P212S/17	CH18-, FL1, CH6+, CH7+, CH8+, CH9+	5TS26	
			R15/R16	Single	24AWG	
15	CH7 -	Internal 0V (Therm) Bus	Various	Daisy Chained to CH18-	24AWG	
16	CH7 +	SSH Sun Sensor B Cathode 2	P212S/2	CH18-, FL1, CH6+, CH7+, CH8+, CH9+	5TS26	
			R17/R18	Single	24AWG	
17	CH8 -	Internal 0V (Therm) Bus	Various	Daisy Chained to CH18-	24AWG	
18	CH8 +	SSH Sun Sensor B Cathode 3	P212S/32	CH18-, FL1, CH6+, CH7+, CH8+, CH9+	5TS26	
			R19/R20	Single	24AWG	
19	CH9 -	Internal 0V (Therm) Bus	Various	Daisy Chained to CH18-	24AWG	
20	CH9+	SSH Sun Sensor B Cathode 4	P212S/18	CH18-, FL1, CH6+, CH7+, CH8+, CH9+	5TS26	
			R21/R22	Single	24AWG	
21	CH10 -	Internal 0V (AD490) Bus	Various	Daisy Chained to CH19-	24AWG	

File : Scxihar.xls

Analogue Terminal Block :Based on SCXI1300 + Resistor Board + Additional Terminals

Item	Terminal Block 1	Function	Destn	Wire Groups	Wire Type	Comments
22	CH10 +	SSH HWA Temperature A Sense	P212S/6	Grouped with CH10+, CH19+, FL1	2TS26	
			R3-2	Single	24AWG	
23	CH11 -	Internal 0V (AD490) Bus	Various	Daisy Chained to CH19-	24AWG	
24	CH11+	SSH HWA Temperature B Sense	P212S/8	Grouped with CH11+, CH19+, FL1	2TS26	
			R4-2	Single	24AWG	
25	CH12 -	Internal 0V (AD490) Bus	Various	Daisy Chained to CH19-	24AWG	
26	CH12 +	SSH Motor Temperature A Sense	P212S/36	Grouped with CH12+, CH19+, FL1	2TS26	
			R5-2	Single	24AWG	
27	CH13 -	Internal 0V (AD490) Bus	Various	Daisy Chained to CH19-	24AWG	
28	CH13 +	SSH Motor Temperature B Sense	P212S/22	Grouped with CH13+, CH19+, FL1	2TS26	
			R6-2	Single	24AWG	
29	CH14 -	SVA Motor A Monitor -ve	TB03/NC(2)	Grouped with CH14-, NC1	2T24	Changed from TB03/NC(4), 1/10/98
			R24	Single	24AWG	
30	CH14+	SVA Motor A Monitor	R23/R24	Single	24AWG	
31	CH15 -	SVA Motor B Monitor -ve	~~TB03/NC(4)~~	~~Grouped with CH15-, NC2~~	~~2T24~~	Deleted 1/10/98
32			R26	Single	24AWG	
33	CH15 +	SVA Motor B Monitor	R25/R26	Single	24AWG	
34	CH16 -	SSH Door Position Sensor Return	P212S/25	Grouped with CH16+/-, CH17+, FL1	3TS26	
			CH17-	Single	24AWG	
35	CH16 +	SSH Door Position Sensor Wiper	P212S/39	Grouped with CH16+/-, CH17+, FL1	3TS26	
36	CH17-	0V (Pot)	TB04/T4	CH17+/CH17-	2T24	
		SSH Door Position Sensor Return	CH16-	Single	24AWG	
37	CH17+	+10V (Pot)	TB04/T1	CH17+/CH17-	2T24	
		SSH Door Position Sensor Drive	P212S/24	Grouped with CH16+/-, CH17+, FL1	3TS26	
38	CH18-	0V (Therm)	TB04/T5	CH18+/CH18-	2T24	
		SSH Sun Sensor A Anodes	P212S/33	CH18-, FL1, CH2+, CH3+, CH4+, CH5+	5TS26	
		SSH Sun Sensor B Anodes	P212S/31	CH18-, FL1, CH6+, CH7+, CH8+, CH9+	5TS26	
		Internal 0V (Therm) Bus	Various	Daisy Chained to CH18-	24AWG	
39	CH18+	+10V (Therm)	TB04/T2	CH18+/CH18-	2T24	
		Internal +10V (Therm) Bus	Various	Daisy Chained to CH18+	24AWG	
40	CH19-	0V(AD490)	TB04/T6	CH19+/CH19-	2T24	

File : Scxihar.xls

Analogue Terminal Block :Based on SCXI1300 + Resistor Board + Additional Terminals

Item	Terminal Block 1	Function	Destn	Wire Groups	Wire Type	Comments
		Internal 0V (AD490) Bus	Various	Daisy Chained to CH19-	24AWG	
41	CH19+	+10V(AD490)	TB04/T3	CH19+/CH19-	2T24	
		SVA Motor Temp A Drive	P221S/1	Grouped with CH0+, CH19+, FL1	2TS26	
		SVA Motor Temp B Drive	P221S/7	Grouped with CH1+, CH19+, FL1	2TS26	
		SSH HWA Temperature A Drive	P212S/5	Grouped with CH10+, CH19+, FL1	2TS26	
		SSH HWA Temperature B Drive	P212S/7	Grouped with CH11+, CH19+, FL1	2TS26	
		SSH Motor Temperature A Drive	P212S/35	Grouped with CH12+, CH19+, FL1	2TS26	
		SSH Motor Temperature B Drive	P212S/21	Grouped with CH13+, CH19+, FL1	2TS26	
42	NC1	SVA Motor A Monitor +ve	TB03/NC(1)	Grouped with CH14-, NC1	2T24	Changed from TB03/NC(3), 1/10/98
			R23	Single	24AWG	
43	NC2	SVA Motor B Monitor +ve	~~TB03/NO(3)~~	~~Grouped with CH15-, NC2~~	~~2T24~~	Deleted 1/10/98
			R25	Single	24AWG	
44	R1-1	Internal 0V (AD490) Bus	Various	Daisy Chained to CH19-	24AWG	RESISTOR 12K1 RS 166-807
45	R1-2	SVA Motor Temp A Sense	CH0+			
46	R2-1	Internal 0V (AD490) Bus	Various	Daisy Chained to CH19-	24AWG	RESISTOR 12K1 RS 166-807
47	R2-2	SVA Motor Temp B Sense	CH1+			
48	R3-1	Internal 0V (AD490) Bus	Various	Daisy Chained to CH19-	24AWG	RESISTOR 12K1 RS 166-807
49	R3-2	SSH HWA Temperature A Sense	CH10+	Single	24AWG	
50	R4-1	Internal 0V (AD490) Bus	Various	Daisy Chained to CH19-	24AWG	RESISTOR 12K1 RS 166-807
51	R4-2	SSH HWA Temperature B Sense	CH11+	Single	24AWG	
52	R5-1	Internal 0V (AD490) Bus	Various	Daisy Chained to CH19-	24AWG	RESISTOR 12K1 RS 166-807
53	R5-2	SSH Motor Temperature A Sense	CH12+	Single	24AWG	
54	R6-1	Internal 0V (AD490) Bus	Various	Daisy Chained to CH19-	24AWG	RESISTOR 12K1 RS 166-807
55	R6-2	SSH Motor Temperature B Sense	CH13+	Single	24AWG	
56	R7	Internal +10V (Therm) Bus	Various	Daisy Chained to CH18+	24AWG	RESISTOR 8K45 RS 166-655
57	R7/R8	SSH Sun Sensor A Cathode 1	CH2+	Single	24AWG	
58	R8	Internal 0V (Therm) Bus	Various	Daisy Chained to CH18-	24AWG	RESISTOR 5K11 RS 166-447
59	R9	Internal +10V (Therm) Bus	Various	Daisy Chained to CH18+	24AWG	RESISTOR 8K45 RS 166-655
60	R9/R10	SSH Sun Sensor A Cathode 2	CH3+	Single	24AWG	
61	R10	Internal 0V (Therm) Bus	Various	Daisy Chained to CH18-	24AWG	RESISTOR 5K11 RS 166-447
62	R11	Internal +10V (Therm) Bus	Various	Daisy Chained to CH18+	24AWG	RESISTOR 8K45 RS 166-655

B9

File : Scxihar.xls

Analogue Terminal Block :Based on SCXI1300 + Resistor Board + Additional Terminals

Item	Terminal Block 1	Function	Destn	Wire Groups	Wire Type	Comments
63	R11/R12	SSH Sun Sensor A Cathode 3	CH4+	Single	24AWG	
64	R12	Internal 0V (Therm) Bus	Various	Daisy Chained to CH18-	24AWG	RESISTOR 5K11 RS 166-447
65	R13	Internal +10V (Therm) Bus	Various	Daisy Chained to CH18+	24AWG	RESISTOR 8K45 RS 166-655
66	R13/R14	SSH Sun Sensor A Cathode 4	CH5+	Single	24AWG	
67	R14	Internal 0V (Therm) Bus	Various	Daisy Chained to CH18-	24AWG	RESISTOR 5K11 RS 166-447
68	R15	Internal +10V (Therm) Bus	Various	Daisy Chained to CH18+	24AWG	RESISTOR 8K45 RS 166-655
69	R15/R16	SSH Sun Sensor B Cathode 4	CH6+	Single	24AWG	
70	R16	Internal 0V (Therm) Bus	Various	Daisy Chained to CH18-	24AWG	RESISTOR 5K11 RS 166-447
71	R17	Internal +10V (Therm) Bus	Various	Daisy Chained to CH18+	24AWG	RESISTOR 8K45 RS 166-655
72	R17/R18	SSH Sun Sensor B Cathode 4	CH7+	Single	24AWG	
73	R18	Internal 0V (Therm) Bus	Various	Daisy Chained to CH18-	24AWG	RESISTOR 5K11 RS 166-447
74	R19	Internal +10V (Therm) Bus	Various	Daisy Chained to CH18+	24AWG	RESISTOR 8K45 RS 166-655
75	R19/R20	SSH Sun Sensor B Cathode 4	CH8+	Single	24AWG	
76	R20	Internal 0V (Therm) Bus	Various	Daisy Chained to CH18-	24AWG	RESISTOR 5K11 RS 166-447
77	R21	Internal +10V (Therm) Bus	Various	Daisy Chained to CH18+	24AWG	RESISTOR 8K45 RS 166-655
78	R21/R22	SSH Sun Sensor B Cathode 4	CH9+	Single	24AWG	
79	R22	Internal 0V (Therm) Bus	Various	Daisy Chained to CH18-	24AWG	RESISTOR 5K11 RS 166-447
80	R23	SVA Motor A Monitor +ve	NC1	Single	24AWG	RESISTOR 10K RS 144-368
81	R23/R24	SVA Motor A Monitor	CH14+	Single	24AWG	
82	R24	SVA Motor A Monitor -ve	CH14-	Single	24AWG	RESISTOR 1K RS 146-506
83	R25	SVA Motor B Monitor +ve	NC2	Single	24AWG	RESISTOR 10K RS 144-368
84	R25/R26	SVA Motor B Monitor	CH15+	Single	24AWG	
85	R26	SVA Motor B Monitor -ve	CH15-	Single	24AWG	RESISTOR 1K RS 146-506
86	FL1	Structure	Chassis	Single	24AWG	Flying lead, connect to chassis of assembly
		SSH Sun Sensor A Cable Shield	Shield	CH18-, FL1, CH2+, CH3+, CH4+, CH5+	5TS26	Use 24 or 26AWG, daisy chained
		SSH Sun Sensor B Cable Shield	Shield	CH18-, FL1, CH6+, CH7+, CH8+, CH9+	5TS26	Use 24 or 26AWG, daisy chained
		SVA Motor Temp A Shield	Shield	Grouped with CH0+, CH19+, FL1	2TS26	Use 24 or 26AWG, daisy chained
		SVA Motor Temp B Shield	Shield	Grouped with CH1+, CH19+, FL1	2TS26	Use 24 or 26AWG, daisy chained
		SSH HWA Temperature A Shield	Shield	Grouped with CH10+, CH19+, FL1	2TS26	Use 24 or 26AWG, daisy chained
		SSH HWA Temperature B Shield	Shield	Grouped with CH11+, CH19+, FL1	2TS26	Use 24 or 26AWG, daisy chained
		SSH Motor Temperature A Shield	Shield	Grouped with CH12+, CH19+, FL1	2TS26	Use 24 or 26AWG, daisy chained

B10

File : Scxihar.xls

Analogue Terminal Block :Based on SCXI1300 + Resistor Board + Additional Terminals

Item	Terminal Block 1	Function	Destn	Wire Groups	Wire Type	Comments
		SSH Motor Temperature B Shield	Shield	Grouped with CH13+, CH19+, FL1	2TS26	Use 24 or 26AWG, daisy chained
		SSH Door Pos Sensor Cable Shield	Shield	Grouped with CH16+/-, CH17+, FL1	3TS26	Use 24 or 26AWG, daisy chained

B11

File : Scxihar.xls
Digital Terminal Block :Based on SCXI1301 + Additional Terminals

Item	Terminal Block 2	Function	Destn	Wire Groups	Wire Type	Comments
1	CH1 + (A30)	SVA Door Fully Open uSw N.O.	P221S/8	Grouped with T1, T14, CH1+,	3TS26	
			R2-2	Single	24AWG	
2	CH1 - (C30)	Internal +5V (DIG) Bus	Various	Daisy Chained to T13	24AWG	
3	CH2 + (A26)	SSH Latch Fully Disen uSw N.O.	P212S/41	Grouped with T4,T12,T14, CH2+	3TS26	
			R6-2	Single	24AWG	
4	CH2 - (C26)	Internal +5V (DIG) Bus	Various	Daisy Chained to T13	24AWG	
5	R1-1	Internal +5V (DIG) Bus	Various	Daisy Chained to T13	24AWG	RESISTOR 10K RS 144-368
6	R1-2		T1	Single	24AWG	
7	R2-1	Internal +5V (DIG) Bus	Various	Daisy Chained to T13	24AWG	RESISTOR 10K RS 144-368
8	R2-2		CH1+	Single	24AWG	
9	R3-1	Internal +5V (DIG) Bus	Various	Daisy Chained to T13	24AWG	RESISTOR 10K RS 144-368
10	R3-2		T2	Single	24AWG	
11	R4-1	Internal +5V (DIG) Bus	Various	Daisy Chained to T13	24AWG	RESISTOR 10K RS 144-368
12	R4-2		T3	Single	24AWG	
13	R5-1	Internal +5V (DIG) Bus	Various	Daisy Chained to T13	24AWG	RESISTOR 10K RS 144-368
14	R5-2		T4	Single	24AWG	
15	R6-1	Internal +5V (DIG) Bus	Various	Daisy Chained to T13	24AWG	RESISTOR 10K RS 144-368
16	R6-2		CH2+	Single	24AWG	
17	R7-1	Internal +5V (DIG) Bus	Various	Daisy Chained to T13	24AWG	RESISTOR 10K RS 144-368
18	R7-2		T5	Single	24AWG	
19	R8-1	Internal +5V (DIG) Bus	Various	Daisy Chained to T13	24AWG	RESISTOR 10K RS 144-368
20	R8-2		T6	Single	24AWG	
21	R9-1	Internal +5V (DIG) Bus	Various	Daisy Chained to T13	24AWG	RESISTOR 10K RS 144-368
22	R9-2		T8	Single	24AWG	
23	R10-1	Internal +5V (DIG) Bus	Various	Daisy Chained to T13	24AWG	RESISTOR 10K RS 144-368
24	R10-2		T7	Single	24AWG	
25	R11-1	Internal +5V (DIG) Bus	Various	Daisy Chained to T13	24AWG	RESISTOR 10K RS 144-368
26	R11-2		T11	Single	24AWG	
27	R12-1	Internal +5V (DIG) Bus	Various	Daisy Chained to T13	24AWG	RESISTOR 10K RS 144-368
28	R12-2		T10	Single	24AWG	
29	T1 (B30)	SVA Door Fully Open uSw N.C.	P221S/2	Grouped with T1,T12,T14,CH1+,	3TS26	Connect to PL1 connector pin in brackets

B12

File : Scxihar.xls
Digital Terminal Block :Based on SCXI1301 + Additional Terminals

Item	Terminal Block 2	Function	Destn	Wire Groups	Wire Type	Comments
			R1-2	Single	24AWG	
30	T2 (B29)	SVA Door Fully Closed uSw N.C.	P221S/15	Grouped with T2,T3,T12,T14	3TS26	Connect to PL1 connector pin in brackets
			R3-2	Single	24AWG	
31	T3 (A29)	SVA Door Fully Closed uSw N.O.	P221S/5	Grouped with T2,T3,T12,T14	3TS26	Connect to PL1 connector pin in brackets
			R4-2	Single	24AWG	
32	T4 (B26)	SSH Latch Fully Disen uSw N.C.	P212S/11	Grouped with T4,T12,T14, CH2+	3TS26	Connect to PL1 connector pin in brackets
			R5-2	Single	24AWG	
33	T5 (B25)	SSH Door Fully Closed uSw N.C.	P212S/12	Grouped with T5,T6,T12,T14	3TS26	Connect to PL1 connector pin in brackets
			R7-2	Single	24AWG	
34	T6 (A25)	SSH Door Fully Closed uSw N.O.	P212S/42	Grouped with T5,T6,T12,T14	3TS26	Connect to PL1 connector pin in brackets
			R8-2	Single	24AWG	
35	T7 (A22)	SSH Latch Fully Engaged uSw N.O.	P212S/43	Grouped with T7,T8,T12,T14	3TS26	Connect to PL1 connector pin in brackets
			R10-2	Single	24AWG	
36	T8 (B22)	SSH Latch Fully Engaged uSw N.C.	P212S/13	Grouped with T7,T8,T12,T14	3TS26	Connect to PL1 connector pin in brackets
			R9-2	Single	24AWG	
37	T9 (C22)	Internal +5V (DIG) Bus	Various	Daisy Chained to T13	24AWG	Connect to PL1 connector pin in brackets
38	T10 (A21)	SSH Door Fully Open uSw N.O.	P212S/44	Grouped with T10,T11,T12,T14	3TS26	Connect to PL1 connector pin in brackets
			R12-2	Single	24AWG	
39	T11 (B21)	SSH Door Fully Open uSw N.C.	P212S/14	Grouped with T10,T11,T12,T14	3TS26	Connect to PL1 connector pin in brackets
			R11-2	Single	24AWG	
40	T12	Structure	Chassis	Single	24AWG	Connect to chassis of assembly
		SVA Door Fully Open Shield	Shield	Grouped with T1,T12,T14,CH1+	3TS26	
		SVA Door Fully Closed Shield	Shield	Grouped with T2,T3,T12,T14	3TS26	
		SSH Latch Fully Disen Shield	Shield	Grouped with T4,T12,T14, CH2+	3TS26	
		SSH Door Fully Closed Shield	Shield	Grouped with T5,T6,T12,T14	3TS26	
		SSH Latch Fully Engaged Shield	Shield	Grouped with T7,T8,T12,T14	3TS26	
		SSH Door Fully Open Shield	Shield	Grouped with T10,T11,T12,T14	3TS26	
41	T13	+5V (DIG)	TB04/Hold	Grouped with T13/T14	2T24	
		Internal +5V (DIG) Bus	Various	Daisy Chained to T13	24AWG	
42	T14	0V (DIG)	TB04/Gnd	Grouped with T13/T14	2T24	
		SVA Door Fully Open uSw Com	P221S/13	Grouped with T1,T12,T14,CH1+	3TS26	

B13

File : Scxihar.xls
Digital Terminal Block :Based on SCXI1301 + Additional Terminals

Item	Terminal Block 2	Function	Destn	Wire Groups	Wire Type	Comments
		SVA Door Fully Closed uSw Com	P221S/10	Grouped with T2,T3,T12,T14	3TS26	
		SSH Latch Fully Disen uSw Com	P212S/27	Grouped with T4,T12,T14, CH2+	3TS26	
		SSH Door Fully Closed uSw Com	P212S/28	Grouped with T5,T6,T12,T14	3TS26	
		SSH Latch Fully Engaged uSw Com	P212S/29	Grouped with T7,T8,T12,T14	3TS26	
		SSH Door Fully Open uSw Com	P212S/30	Grouped with T10,T11,T12,T14	3TS26	

B14

File : Scxihar.xls
Relay Switching : Based on SCXI1324 + Additional Terminals

Item	Terminal Block 3	Function	Destn	Wire Groups	Wire Type	Comments
1	COM(0) (B32)	PSU +ve (CL)	TB04/CH2+	Grouped with COM(0), NO(1)	2T22	
2	NO(0) (A31)	SVA Over Voltage	TB04/CH7+	Single	22AWG	
		SVA Supply	NC(1)	Single	22AWG	
		SVA Supply	NO(2)	Single	22AWG	
3	NC(0) (C31)	Not Used				
4	COM(1) (B30)	SVA Supply Switched.1	COM(3)	Single	22AWG	
5	NO(1) (A29)	PSU -ve (CL)	TB04/CH2-	Grouped with COM(0), NO(1)	2T22	
			NC(2)	Single	22AWG	
6	NC(1) (C29)	SVA Supply	NO(0)	Single	22AWG	
			TB01/NC01	Grouped with NC(1), NC(2)	2T24	Added 1/10/98
7	COM(2) (B28)	SVA Supply Switched.2	COM(4)	Single	22AWG	
8	NO(2) (A27)	SVA Supply	NO(0)	Single	22AWG	
9	NC(2) (C27)	PSU -ve (CL)	NO(1)	Single	22AWG	
			TB01/CH14-	Grouped with NC(1), NC(2)	2T24	Added 1/10/98
10	COM(3) (B26)	SVA Supply Switched.1	COM(1)	Single	22AWG	
11	NO(3) (A25)	~~SVA Motor B Monitor +ve~~	~~TB01/NC2~~	~~Grouped with NO(3), NO(4)~~	~~2T24~~	Deleted 1/10/98
		SVA Motor Winding B Drive	P221S/4	Grouped with NO(3), NO(4), FL1	2TS24	
12	NC(3) (C25)	~~SVA Motor A Monitor +ve~~	~~TB01/NC1~~	~~Grouped with NC(3), NC(4)~~	~~2T24~~	Deleted 1/10/98
		SVA Motor Winding A Drive	P221S/3	Grouped with NC(3), NC(4), FL1	2TS24	
13	COM(4) (B24)	SVA Supply Switched.2	COM(2)	Single	22AWG	
14	NO(4) (A23)	~~SVA Motor B Monitor -ve~~	~~TB01/CH15-~~	~~Grouped with NO(3), NO(4)~~	~~2T24~~	Deleted 1/10/98
		SVA Motor Winding B Return	P221S/9	Grouped with NO(3), NO(4), FL1	2TS24	
15	NC(4) (C23)	~~SVA Motor A Monitor -ve~~	~~TB01/CH14-~~	~~Grouped with NC(3), NC(4)~~	~~2T24~~	Deleted 1/10/98
		SVA Motor Winding A Return	P221S/14	Grouped with NC(3), NC(4), FL1	2TS24	
16	COM(5) (B22)	PSU +ve (CL)	TB04/CH3+	Grouped with COM(5), COM(13)	2T22	
17	NO(5) (A21)	HWA Over Voltage	TB04/CH6+	Single	22AWG	
		HWA Supply	COM(6)	Single	22AWG	
18	NC(5) (C21)	Not Used				
19	COM(6) (B20)	HWA Supply	NO(5)	Single	22AWG	
20	NO(6) (A19)	SSH HWA Heater B Drive	P211S/2	Grouped with COM(13), FL1, NO(6)	2TS22	
21	NC(6) (C19)	SSH HWA Heater A Drive	P211S/1	Grouped with COM(13), FL1, NC(6)	2TS22	

B15

File : Scxihar.xls
Relay Switching : Based on SCXI1324 + Additional Terminals

Item	Terminal Block 3	Function	Destn	Wire Groups	Wire Type	Comments
22	COM(7) (B18)	PSU +ve (CL)	TB04/CH4+	Single	22AWG	
23	NO(7) (A17)	+28V SHA	TB04/CH6-	Single	22AWG	
24	NC(7) (C17)	Not Used				
25	COM(8) (B16)	Not Used				
26	NO(8) (A15)	Not Used				
27	NC(8) (C15)	Not Used				
28	COM(9) (B14)	SSH Motor Phase A Drive	TB04/CH0+	Grouped with COM(9) (10) (11)	3T22	
29	NO(9) (A13)	SSH Motor B Phase 1 Drive (Yel)	P211S/9	Grouped with FL1, NO(9) (10) (11)	3TS24	
30	NC(9) (C13)	SSH Motor A Phase 1 Drive (Yel)	P211S/7	Grouped with FL1, NC(9) (10) (11)	3TS24	
31	COM(10) (B12)	SSH Motor Phase B Drive	TB04/CH1+	Grouped with COM(9) (10) (11)	3T22	
32	NO(10) (A11)	SSH Motor B Phase 2 Drive (Red)	P211S/14	Grouped with FL1, NO(9) (10) (11)	3TS24	
33	NC(10) (C11)	SSH Motor A Phase 2 Drive (Red)	P211S/12	Grouped with FL1, NC(9) (10) (11)	3TS24	
34	COM(11) (B10)	SSH Motor Phase C Drive	TB04/CH0-	Grouped with COM(9) (10) (11)	3T22	
35	NO(11) (A9)	SSH Motor B Phase 3 Drive (Wht)	P211S/15	Grouped with FL1, NO(9) (10) (11)	3TS24	
36	NC(11) (C9)	SSH Motor A Phase 3 Drive (Wht)	P211S/13	Grouped with FL1, NC(9) (10) (11)	3TS24	
37	COM(12) (B8)	Not Used				
38	NO(12) (A7)	Not Used				
39	NC(12) (C7)	Not Used				
40	COM(13) (B6)	PSU -ve (CL)	TB04/CH3-	Grouped with COM(5), COM(13)	2T22	
		SSH HWA Heater A Return	P211S/11	Grouped with COM(13), FL1, NC(6)	2TS22	
		SSH HWA Heater B Return	P211S/6	Grouped with COM(13), FL1, NO(6)	2TS22	
41	NO(13) (A5)	Not Used				
42	NC(13) (C5)	Not Used				
43	COM(14) (B4)	Not Used				
44	NO(14) (A3)	Not Used				
45	NC(14) (C3)	Not Used				
46	COM(15) (B2)	Not Used				
47	NO(15) (A1)	Not Used				
48	NC(15) (C1)	Not Used				
49	FL1	Structure	Chassis	Single	24AWG	Connect to chassis of assembly
		SVA Motor Winding A Shield	Shield	Grouped with NC(3), NC(4), FL1	2TS24	

B16

File : Scxihar.xls
Relay Switching : Based on SCXI1324 + Additional Terminals

Item	Terminal Block 3	Function	Destn	Wire Groups	Wire Type	Comments
		SVA Motor Winding B Shield	Shield	Grouped with NO(3), NO(4), FL1	2TS24	
		SSH HWA Heater A Shield	Shield	Grouped with COM(13), FL1, NC(6)	2TS22	
		SSH HWA Heater B Shield	Shield	Grouped with COM(13), FL1, NO(6)	2TS22	
		SSH Motor A Shield	Shield	Grouped with FL1, NC(9) (10) (11)	3TS24	
		SSH Motor B Shield	Shield	Grouped with FL1, NO(9) (10) (11)	3TS24	

B17

File : Scxihar.xls

Stepper Motor Terminal Block :Based on SCXI1301 + Additional Terminals

Item	Terminal Block 4	Function	Destn	Wire Groups	Wire Type	Comments
1	CH0 + (A32)	SSH Motor Phase A Drive	TB03/B14	Grouped with CH0+,CH0-,CH1+	3T22	COM(9)
2	CH0 - (C32)	SSH Motor Phase C Drive	TB03/B10	Grouped with CH0+,CH0-,CH1+	3T22	COM(11)
3	CH1 + (A30)	SSH Motor Phase B Drive	TB03/B12	Grouped with CH0+,CH0-,CH1+	3T22	COM(10)
4	CH1 - (C30)	Spare				
5	CH2 + (A26)	PSU +ve (CL)	TB03/B32	Grouped with CH2+,CH2-	2T22	COM(0)
6	CH2 - (C26)	PSU -ve (CL)	TB03/A29	Grouped with CH2+,CH2-	2T22	NO(1)
7	CH3 + (A24)	PSU +ve (CL)	TB03/B22	Grouped with CH3+,CH3-	2T22	COM(5)
8	CH3 - (C24)	PSU -ve (CL)	TB03/COM(13)	Grouped with CH3+,CH3-	2T22	
9	CH4 + (A20)	PSU +ve (CL)	TB03/B18	Single	22AWG	COM(7)
10	CH4 - (C20)	PSU -ve (CL)				
11	CH5 + (A18)	PSU +ve	PSU01/+	Grouped with CH5+, CH5-	2T22	Reverse protection diodes added, IN4001 * 3
12	CH5 -(C18)	PSU -ve	PSU01/-	Grouped with CH5+, CH5-	2T22	Reverse protection diodes added, IN4001 * 3
13	CH6 + (A14)	HWA Over Voltage	TB03/A21	Single	22AWG	NO(5)
14	CH6 - (C14)	+28V SHA	TB03/A17	Single	22AWG	NO(7)
			CH7-	Single	22AWG	
15	CH7 + (A12)	SVA Over Voltage	TB03/A31	Single	22AWG	NO(0)
16	CH7 - (C12)	SHA Over Voltage	CH6-	Single	22AWG	
17	Hold (A6)	+5V (DIG)	TB02/T13	Grouped with Hold/Gnd	2T24	
18	Gnd (C6)	0V (DIG)	TB02/T14	Grouped with Hold/Gnd	2T24	
19	T1 (A5)	+10V (Pot)	TB01/CH17+	Grouped with T1/T4	2T24	Connect to PL1 connector pin in brackets
20	T2 (A4)	+10V (Therm)	TB01/CH18+	Grouped with T2/T5	2T24	Connect to PL1 connector pin in brackets
21	T3 (A3)	+10V(AD490)	TB01/CH19+	Grouped with T3/T6	2T24	Connect to PL1 connector pin in brackets
22	T4 (C5)	0V (Pot)	TB01/CH17-	Grouped with T1/T4	2T24	Connect to PL1 connector pin in brackets
23	T5 (C4)	0V (Therm)	TB01/CH18-	Grouped with T2/T5	2T24	Connect to PL1 connector pin in brackets
24	T6 (C3)	0V(AD490)	TB01/CH19-	Grouped with T3/T6	2T24	Connect to PL1 connector pin in brackets

B18

SECTION 5

Safety, Handling, Packing, Transportation Precautions and Procedures

SAFETY, HANDLING, PACKING, TRANSPORTATION PRECAUTIONS AND PROCEDURES

Electrical Safety Procedures applicable for functional testing of the Space View Aperture Assembly are defined in the SSH and SVA Test Equipment Manual, TC-MMS-400 which is included as part of this End Item Data Pack. There are no additional electrical safety requirements.

The Assembly is delivered installed on the STH Structure Assembly and grounding provisions have been made for transportation to ensure that the Space View Aperture Assembly has an electrical connection to the Transit Container. Note that this grounding hardware is for transportation purposes only; the Instrument Integrator is responsible for the flight standard grounding provisions.

The Flight Model handling, packing and transportation procedures are defined in the following RAL document :-

TC-RAL-168 Preliminary Issue	HIRDLS Flight Transport Container Operating Instructions

FINAL DELIVERY CLEAN

The Flight Structure was shipped to the Customer (RAL), unpacked and baked out in a thermal vacuum chamber to drive off molecular contaminants (Refer to RAL Test Report AIV-99-106-STC for details).

Following removal of the Structure from the chamber, a survey was undertaken to determine the levels of particulate contaminants. This was achieved by performing 'tape lifts' in accordance with ASTM Method E1216 (equivalent to ESA Method ECSS-Q-70-1). Subsequently the Structure was re-packed in it's Driclad bag.

Despite previous vacuuming and a black light survey indicating a clean structure, the tape lift analysis highlighted carbon particles on the surfaces of the panels.

The tape lift samples indicated a cleanliness level in excess of level 500 against a requirement of level 300 and hence, a further clean-up was instigated. This involved light brushing and vacuuming with the assistance of a black (ultra violet) light.

Following intensive cleaning, tape lift samples were repeated and indicated a cleanliness level of level ???. This is therefore regarded as the final cleanliness level at the point of delivery by MMS.

TBD