HIRDLS

TP-MMS-451
(3164-SA028-TPF)
Issue 3

HIGH RESOLUTION DYNAMICS LIMB SOUNDER

Originator: R Coupe Date: 4 April, 2013

Subject/Title: **Space View Aperture Assembly FM Test Procedure**

Description/Summary/Contents:

This document details the test plan and requirement to qualify the HIRDLS SVA assembly at unit level, and is applicable to the FM unit.

Keywords: FM, Space View Aperture, Test Procedure

Purpose of thisDocument: FM Test Procedure

Reviewed/Approved by: Date (yy-mm-dd):			

Matra Marconi Space
Anchorage Road
Portsmouth
Hampshire PO3 5PU
England

EOS

SPACE VIEW APERTURE ASSEMBLY
FM TEST PROCEDURE

TP-MMS-451

Responsible Engineer: ---------- Date: ----------

Quality Assurance: ---------- Date: ----------

Project Manager: ---------- Date: ----------

© MATRA MARCONI SPACE UK LIMITED

THE COPYRIGHT IN THIS DOCUMENT IS THE PROPERTY OF MATRA MARCONI SPACE UK LIMITED. This document is supplied by Matra Marconi Space UK Limited on the express terms that it is to be treated as confidential and that it may not be copied, used or disclosed to others for any purpose except as expressly authorised under the terms of Contract No N2A 3R 0386.

Any person, other than the authorised holder, who finds or otherwise obtains possession of the document, should post it, together with his/her name and address, to the Registry, Matra Marconi Space UK Limited, Anchorage Road, Portsmouth, England, PO3 5PU.
Postage will be refunded.

CONTENTS

1. SCOPE **4**

2. APPLICABLE DOCUMENTS **4**

2.1 DOCUMENTS 4
2.2 DRAWINGS 4

3. TEST PLAN **4**

3.1 MODEL PHILOSOPHY 4
3.2 TEST SPECIMEN 4
3.3 TEST SEQUENCE 4

4. TEST REQUIREMENT **5**

4.1 GENERAL REQUIREMENTS 5
4.2 PRELIMINARY TESTS 5
4.2.1 Preliminary Electrical Tests *5*
4.3 DETERMINE TORQUE LIMITING RESISTOR VALUE 5
4.4 BASELINE FUNCTIONAL TEST 6
4.4.1 Hinge Drive Axis - vertical configuration test *6*
4.4.2 Hinge Drive Axis - horizontal configuration test *7*
4.5 VIBRATION TEST 7
4.5.1 Sine Survey *8*
4.5.2 Random Vibration *8*
4.6 POST VIBRATION FUNCTION TEST 9
4.6.1 Test Results *9*
4.7 THERMAL VACUUM TEST 10
4.7.1 Test Configuration *10*
4.7.2 Functional tests *12*

APPENDIX A DETAILED TEST INSTRUCTIONS **13**

DISTRIBUTION LIST **26**

CHANGE RECORD **26**

1. SCOPE

This document details the test plan and requirement to verify the HIRDLS Space View Aperture Assembly Flight Model at unit level.

2. APPLICABLE DOCUMENTS

2.1 Documents

a) Sun Shield Requirement Specification SP-HIR-50.
b) STH, SSH and SVA Design Development and Test Plan TP-MMS-248.
c) Manual for SSH & SVA Test equipment (EGSE) TC-MMS-400

2.2 Drawings

a) Space View Albedo Shield assembly -HR2L040
b) Vibration Fixture - TAA2203.
c) Thermal Vacuum and Assembly Fixture - TAA2217.

3. TEST PLAN

3.1 Model Philosophy

The SVA model philosophy is defined in the STH, SSH and SVA DD&T plan, AD2.1 (b). The FM will be subjected to the acceptance level tests described herein.

3.2 Test Specimen

The test specimen is the SVA assembly FM unit - HR2L040.

3.3 Test Sequence

The test sequence for the FM SVA assembly is as follows:-

- Baseline functional test.
- Thermal vacuum test.
- Vibration test.
- Post Vibration functional test.

4. TEST REQUIREMENT

This Section details the full test programme which shall be implemented to verify the Space View Aperture Assembly FM at unit level. The instruction sheets included in Appendix A are intended as an aid to the test flow and as a pro forma for the test results. They should be used in conjunction with the main body of this procedure and modified expediently if required.

4.1 General Requirements

The following general requirements are applicable throughout the course of all testing :-

After each motor drive operation cycle, prior to subsequent operation cycle allow :-
15 minutes for motor to cool in vacuum
5 minutes for motor to cool in air

Once motor has stalled after operation cycle, it should be switched off immediately

4.2 Preliminary Tests

Motor assembly HR2L004 to be tested to verify operation of both motors prior to integration into HR2L040. Test in accordance with PO-DIS-MMB-GM-0030 - Motor assembly burn-in test.

- Set up SVA assembly (HR2L040) in assembly fixture (TAA2217) with cover hinge axis vertical.
- Determine torque to manually operate mechanism.

4.2.1 Preliminary Electrical Tests

Fit saver connector to SVA connector
Connect motor flying leads together temporarily to complete motor drive circuits

- Verify terminal resistance of both SVA motors (prime and redundant): 22.7Ω ± 12.5%
- Verify microswitches open and close status against position
- Verify resistance of thermistors at 20°C ≅ 2.8KΩ and that the drive is positive.
- Determine resistance of grounding between cover and baseplate.
- Verify pin connections with respect to each thermistor location (sketch configuration)

4.3 Determine Torque limiting resistor value

Connect short cable harness to breakout box, connect power supply +ve lead to pin 3 and -ve lead to pin 14, for motor A. (Connect power supply +ve lead to pin 4 and -ve lead to pin9, for motor B.) These configurations will open the cover

- Set power supply to 0 Volts and 0.5 Amps.
- Gradually increase voltage of power supply until drive starts to rotate.
- Allow mechanism to fully open cover and switch off power supply.
- Reverse +ve and -ve power supply leads switch on power supply.
- Allow mechanism to fully close cover and switch off power supply.

Using the following parameters calculate the torque limiting resistor value required to provide a torque margin of x3 when operated at 28V.

- Terminal resistance $R1$
- Minimum operating voltage $V1$

$$\text{Resistor Value} = \left\{ \frac{R1 \times 28}{V1 \times 3} \right\} - R1$$

Repeat above operations using motor B.

4.4 Baseline Functional Test

4.4.1 Hinge Drive Axis - vertical configuration test

Set up SVA assembly (HR2L040) in assembly fixture (TAA2127) with cover hinge axis vertical.
Connect HIRDLS EGSE cable harness to SVA connector (refer to manual TC-MMS-400 para 4.1) and set parameters on screen.

Alternatively, if EGSE is not available :-
Connect short cable harness to breakout box, connect power supply +ve lead to pin 3 and -ve lead to pin 14, for motor A. (Connect power supply +ve lead to pin 4 and -ve lead to pin9, for motor B.) These configurations will open the cover

- Set power supply to 28 Volts and 0.5 Amps.
- Switch on power supply
- Allow mechanism to fully open cover and switch off power supply.
- Verify fully open microswitch indicates correct status of cover.
- Reverse +ve and -ve power supply leads switch on power supply.
- Allow mechanism to fully close cover and switch off power supply.
- Verify fully closed microswitch indicates correct status of cover.
- Set power supply to 0 Volts and 0.5 Amps.
- Reverse +ve and -ve power supply leads switch on power supply.
- Gradually increase voltage of power supply until drive starts to rotate. (Record voltage)
- Switch off power supply, increase voltage of power supply to 28V, switch on power supply.
- Allow mechanism to fully open cover and switch off power supply.
- Verify fully closed microswitch indicates correct status of cover.
- Set power supply to 0 Volts and 0.5 Amps.
- Reverse +ve and -ve power supply leads switch on power supply.
- Gradually increase voltage of power supply until drive starts to rotate. (Record voltage)
- After cover rotates to close position and stalls, gradually increase voltage of power supply until drive starts to rotate. (Record voltage)
- Allow mechanism to fully close cover and switch off power supply.
- Verify fully closed microswitch indicates correct status of cover.
- Repeat opening / closing to a total of 10 operations

4.4.2 Hinge Drive Axis - horizontal configuration test

Set up SVA assembly (HR2L040) in assembly fixture (TAA2217) with cover hinge axis horizontal. Repeat operations detailed in para 4.3.1.

4.5 Vibration Test

The FM unit shall undergo workmanship level random vibration testing. Low level sine surveys shall be performed before and after each random vibration test to verify that the dynamic characteristics of the unit have not changed. The test sequence shall be as follows :

For each axis in turn (no preference for the order):

Low level sine survey	(See Section 4.5.1)
Workmanship level random vibration	(See Section 4.5.2)
Low level sine survey	(See Section 4.5.1)

The vibration axes and accelerometer positions are defined in Figure 4.5-1. For testing, the SVA shall be mounted to the vibration fixture (Drawing No. TAA2203) in accordance with the top level Assembly Drawing (No. HR2L040) requirements.

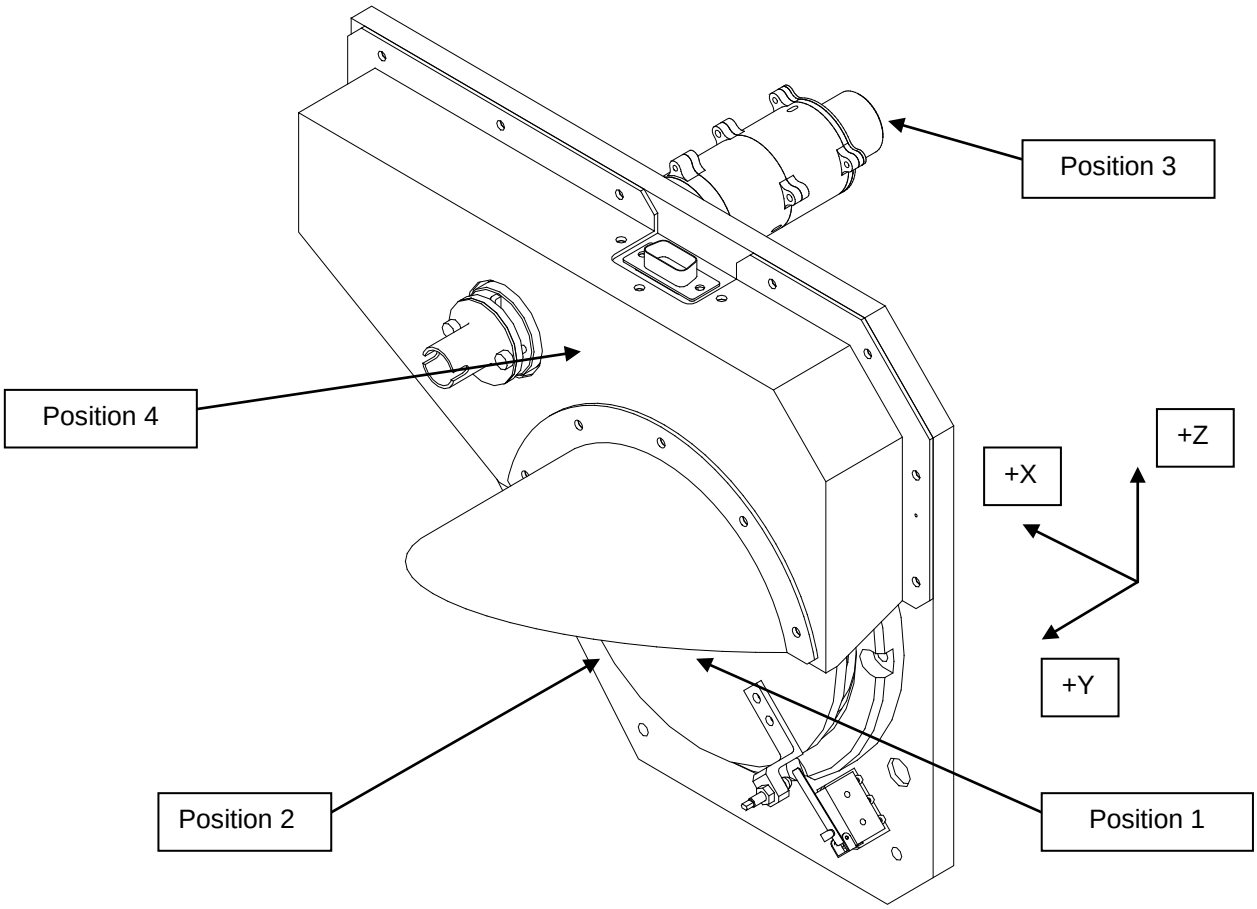

Figure 4.5-1 Test Axes and Instrumentation Definition for Vibration Test

Tri-axial accelerometers shall be mounted at each of the positions shown which are summarised below.

Position 1 Centre of Aperture cover
Position 2 SVA baseplate adjacent to door
Position 3 End of the Motor Housing
Position 4 Albedo Shield Cover

Note: Refer to Test Director for exact positions of instrumentation

4.5.1 Sine Survey

Low level sine surveys shall comprise a single sweep from 5 to 2000 Hz at a sweep rate of 2 octaves/minute and at a level of 0.2g.

4.5.2 Random Vibration

Workmanship test levels are given in Table 4.5-2. FM tests shall have a duration of 60 seconds per axis.

Axis	Frequency (Hz)	Level (g^2/Hz)	Total Level (grms)
	20	0.01	)
X	20-50	+3 dB/oct	)
Y	50-800	0.08	) 7.4
Z	800-2000	- 3 dB/oct	)

Table 4.5-2 Random Vibration Workmanship Test

4.6 Post Vibration Function Test

Connect HIRDLS EGSE cable harness to SVA connector (refer to manual TC-MMS-400 para 4.1) and set parameters on screen.

Alternatively, if EGSE is not available :-
Connect short cable harness to breakout box, connect power supply +ve lead to pin 3 and -ve lead to pin 14, for motor A. (Connect power supply +ve lead to pin 4 and -ve lead to pin9, for motor B.) These configurations will open the cover

- Set power supply to 28 Volts and 0.5 Amps.
- Switch on power supply
- Allow mechanism to fully open cover and switch off power supply.
- Verify fully open microswitch indicates correct status of cover.
- Reverse +ve and -ve power supply leads switch on power supply.
- Allow mechanism to fully close cover and switch off power supply.
- Verify fully closed microswitch indicates correct status of cover.
- Set power supply to 0 Volts and 0.5 Amps.
- Reverse +ve and -ve power supply leads switch on power supply.
- Gradually increase voltage of power supply until drive starts to rotate.(Record voltage)
- Switch off power supply, increase voltage of power supply to 28V, switch on power supply.
- Allow mechanism to fully open cover and switch off power supply.
- Verify fully closed microswitch indicates correct status of cover.
- Set power supply to 0 Volts and 0.5 Amps.
- Reverse +ve and -ve power supply leads switch on power supply.
- Gradually increase voltage of power supply until drive starts to rotate.(Record voltage)
- After cover rotates to close position and stalls, gradually increase voltage of power supply until drive starts to rotate.(Record voltage)
- Allow mechanism to fully close cover and switch off power supply.
- Verify fully closed microswitch indicates correct status of cover.
- Repeat opening / closing to a total of 4 operations

4.6.1 Test Results

Compare post-vibration test results with the baseline functional test results (Para 4.3).

4.7 Thermal Vacuum Test

The FM unit shall be tested in vacuum (<10^{-5} Torr) at its upper and lower acceptance temperature limits whilst operational and when driven by representative electronics. The thermal vacuum test profile is shown in Figure 4.5-1. The SVA shall be mounted so that the hinge axis is vertical. The test shall be controlled by the reference thermocouple which shall be attached to the baseplate.

The time duration spent at each upper or lower limit shall be a minimum of 4 hours (see Figure 4.5-1). The rate of change between limits shall not exceed 5°C/min.

Acceptance temperature limits are given in Table 4.5-1.

Operating	
Min	**Max**
-25	25

Table 4.5-1 : Acceptance Temperature Limits (°C)

The time duration (minimum) spent at each limit and the maximum rate of change between limits, shall be 4 hours and 5°C/min respectively (see Figure 4.5-1). The unit shall be tested through 4 complete thermal cycles.

4.7.1 Test Configuration

Fit SVA to assembly fixture TAA2127. Fastener torque tightening requirements are detailed in SVA assembly drawing HR2L040.

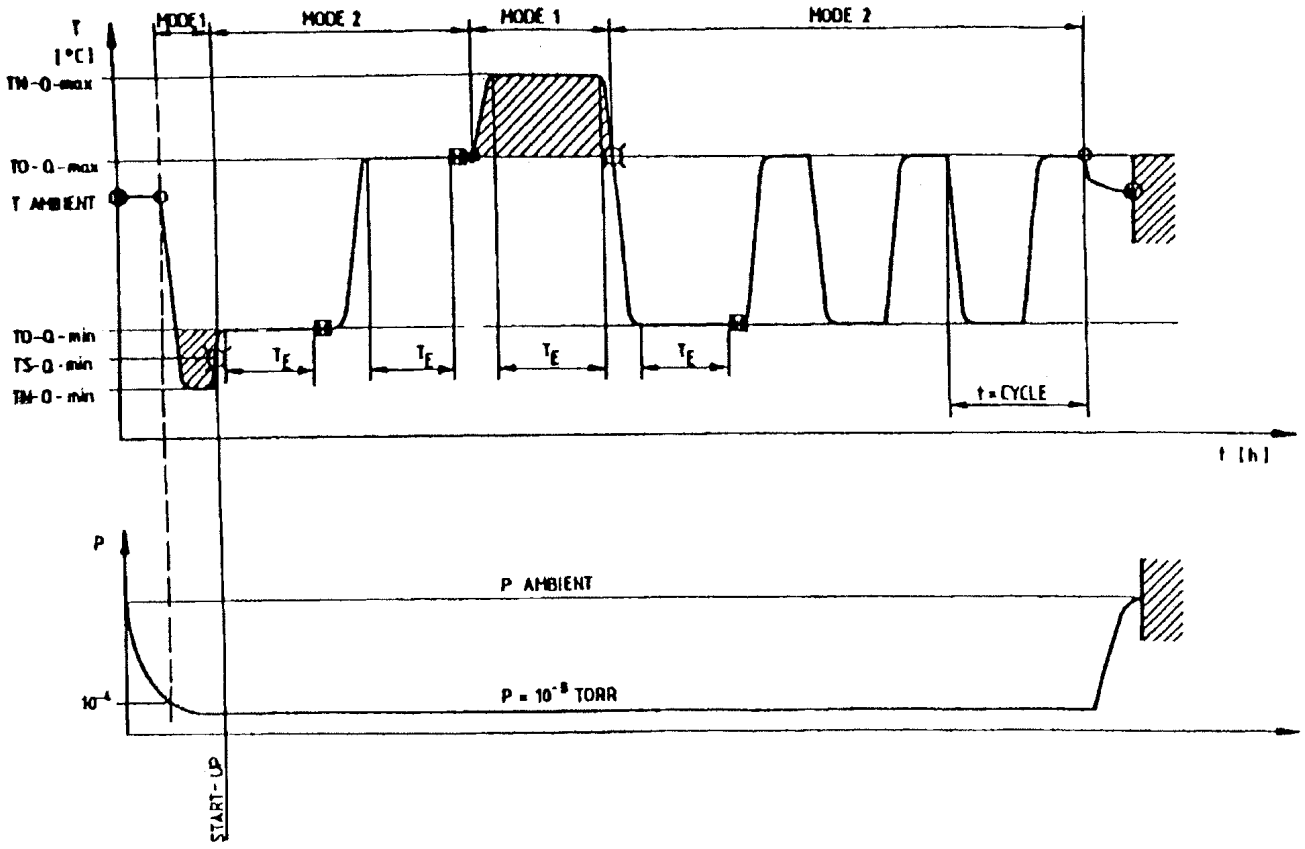

Figure 4.5-1 : SVA Thermal Vacuum Test Profile

4.7.2 Functional tests

The tests detailed below are to be performed:-

prior to closing chamber,
after cold temperature soak at -25°C,
after raising temperature to 25°C, and
at ambient temperature (in vacuum) after completion of 4 thermal cycles.

This represents a total of 16 operations (8 with motor A selected, and 8 with motor B selected).

Set up SVA assembly (HR2L040) in assembly fixture (TAA2127) with cover hinge axis horizontal. Connect short cable harness to HIRDLS EGSE (refer to manual TC-MMS-400 para 4.1) and set parameters on screen.

Alternatively, if EGSE is not available :-
Connect short cable harness to breakout box, connect power supply +ve lead to pin 3 and -ve lead to pin 14, for motor A. (Connect power supply +ve lead to pin 4 and -ve lead to pin9, for motor B.) These configurations will open the cover

- Set power supply to 28 Volts and 0.5 Amps.
- Switch on power supply
- Allow mechanism to fully open cover and switch off power supply.
- Verify fully open microswitch indicates correct status ofcover.
- Reverse +ve and -ve power supply leads switch on power supply.
- Allow mechanism to fully close cover and switch off power supply.
- Verify fully closed microswitch indicates correct status of cover.
- Set power supply to 0 Volts and 0.5 Amps.
- Reverse +ve and -ve power supply leads switch on power supply.
- Gradually increase voltage of power supply until drive starts to rotate.(Record voltage)
- Switch off power supply, increase voltage of power supply to 28V, switch on power supply.
- Allow mechanism to fully open cover and switch off power supply.
- Verify fully closed microswitch indicates correct status of cover.
- Set power supply to 0 Volts and 0.5 Amps.
- Reverse +ve and -ve power supply leads switch on power supply.
- Gradually increase voltage of power supply until drive starts to rotate.(Record voltage)
- After cover rotates to close position and stalls, gradually increase voltage of power supply until drive starts to rotate.(Record voltage)
- Allow mechanism to fully close cover and switch off power supply.
- Verify fully closed microswitch indicates correct status of cover.
- Repeat the above sequence for motor B.

4.7.2.1 Test results

Open chamber to inspect SVA assembly.
Compare these test results with the baseline functional test results (Para 4.3) and calculate torque margins.

APPENDIX A DETAILED TEST INSTRUCTIONS

Para	Activity	Results	Comments
4.1	**<u>Preliminary Tests</u>** **Perform Motor Assembly burn-in test i.a.w. PO-DIS-MMB-GM-0030** Set up SVA in fixture with cover hinge axis vertical **Determine torque to manually operate mechanism**		
4.1.1	**<u>Preliminary Electrical Tests</u>** Fit saver connector to SVA connector Connect motor flying leads together **Measure terminal resistance of both SVA motors (primary and redundant)** **Verify open and close status of microswitches with respect to cover position** **Measure resistance of thermistors at 20°C** **Measure electrical resistance between cover and baseplate** **Sketch thermistor wiring diagram with pin connections**		
4.2	**<u>Determine Torque Limiting Resistor Value</u>** **(a) Motor A** Connect cable harness to breakout box, connect power supply +ve lead to Pin 3 and –ve lead to Pin 14 **Determine power supply voltage required to initiate drive at 0.5 Amps** Allow mechanism to fully open cover and switch off power supply Reverse +ve and –ve power supply leads, allow mechanism to fully close cover and switch off power supply **Calculate torque limiting resisting value** **(a) Motor B** Connect cable harness to breakout box, connect power supply +ve lead to Pin 4 and –ve lead to Pin 9 **Determine power supply voltage required to initiate drive at 0.5 Amps** Allow mechanism to fully open cover and switch off power supply		

Para	Activity	Results	Comments
4.2	**Cont.** Reverse +ve and –ve power supply leads, allow mechanism to fully close cover and switch off power supply **Calculate torque limiting resisting value**		
4.3	**<u>Baseline Functional Test</u>**		
4.3.1	**<u>Hinge Drive Axis – vertical configuration test</u>** **(a) Motor A** Set power supply to 28 Volts and 0.5 Amps (using EGSE or manually) Switch on power supply, allow mechanism to fully open cover and switch off power supply **Verify fully open microswitch indicates correct status of cover** Reverse +ve and –ve power supply leads, allow mechanism to fully close cover and switch off power supply **Verify fully closed microswitch indicates correct status of cover** Set power supply to 0 Volts and 0.5 Amps Reverse +ve and –ve power supply leads, switch on power supply **Measure minimum operating drive voltage** Switch off power supply, increase power supply voltage to 28 Volts, allow mechanism to fully open cover and switch off power supply **Verify fully closed microswitch indicates correct status of cover** Set power supply to 0 Volts and 0.5 Amps Reverse +ve and –ve power supply leads and switch on power supply **Measure minimum operating drive voltage** **After motor stalls at close position, determine voltage to initiate drive** Allow mechanism to fully close cover and switch off power supply **Verify fully closed microswitch indicates correct status of cover** **(b) Motor B** Set power supply to 28 Volts and 0.5 Amps (using EGSE or manually)		
Para	**Activity**	**Results**	**Comments**

4.3.1	**Cont.** Switch on power supply, allow mechanism to fully open cover and switch off power supply **Verify fully open microswitch indicates correct status of cover** Reverse +ve and –ve power supply leads, allow mechanism to fully close cover and switch off power supply **Verify fully closed microswitch indicates correct status of cover** Set power supply to 0 Volts and 0.5 Amps Reverse +ve and –ve power supply leads, switch on power supply **Measure minimum operating drive voltage** Switch off power supply, increase power supply voltage to 28 Volts, allow mechanism to fully open cover and switch off power supply **Verify fully closed microswitch indicates correct status of cover** Set power supply to 0 Volts and 0.5 Amps Reverse +ve and –ve power supply leads and switch on power supply **Measure minimum operating drive voltage** **After motor stalls at close position, determine voltage to initiate drive** Allow mechanism to fully close cover and switch off power supply **Verify fully closed microswitch indicates correct status of cover**		
4.3.2	**<u>Hinge Drive Axis – horizontal configuration test</u>** **(a) Motor A** Set power supply to 28 Volts and 0.5 Amps (using EGSE or manually) Switch on power supply, allow mechanism to fully open cover and switch off power supply **Verify fully open microswitch indicates correct status of cover** Reverse +ve and –ve power supply leads, allow mechanism to fully close cover and switch off power supply **Verify fully closed microswitch indicates correct status of cover** Set power supply to 0 Volts and 0.5 Amps		
Para	**Activity**	**Results**	**Comments**

4.3.2	**Cont.** Reverse +ve and –ve power supply leads **Measure minimum operating drive voltage** Switch off power supply, increase power supply voltage to 28 Volts, allow mechanism to fully open cover and switch off power supply **Verify fully closed microswitch indicates correct status of cover** Set power supply to 0 Volts and 0.5 Amps Reverse +ve and –ve power supply leads and switch on power supply **Measure minimum operating drive voltage** **After motor stalls at close position, determine voltage to initiate drive** Allow mechanism to fully close cover and switch off power supply **Verify fully closed microswitch indicates correct status of cover** **(b) Motor B** Set power supply to 28 Volts and 0.5 Amps (using EGSE or manually) Switch on power supply, allow mechanism to fully open cover and switch off power supply **Verify fully open microswitch indicates correct status of cover** Reverse +ve and –ve power supply leads, allow mechanism to fully close cover and switch off power supply **Verify fully closed microswitch indicates correct status of cover** Set power supply to 0 Volts and 0.5 Amps Reverse +ve and –ve power supply leads **Measure minimum operating drive voltage** Switch off power supply, increase power supply voltage to 28 Volts, allow mechanism to fully open cover and switch off power supply **Verify fully closed microswitch indicates correct status of cover** Set power supply to 0 Volts and 0.5 Amps Reverse +ve and –ve power supply leads and switch on power supply **Measure minimum operating drive voltage**		
Para	**Activity**	**Results**	**Comments**
4.3.2	**Cont.**		

	After motor stalls at close position, determine voltage to initiate drive Allow mechanism to fully close cover and switch off power supply **Verify fully closed microswitch indicates correct status of cover**		
4.5	**<u>Post Vibration Function Test</u>** **(a) Motor A** Set power supply to 28 Volts and 0.5 Amps (using EGSE or manually) Switch on power supply, allow mechanism to fully open cover and switch off power supply **Verify fully open microswitch indicates correct status of cover** Reverse +ve and –ve power supply leads, allow mechanism to fully close cover and switch off power supply **Verify fully closed microswitch indicates correct status of cover** Set power supply to 0 Volts and 0.5 Amps Reverse +ve and –ve power supply leads **Measure minimum operating drive voltage** Switch off power supply, increase power supply voltage to 28 Volts, allow mechanism to fully open cover and switch off power supply **Verify fully closed microswitch indicates correct status of cover** Set power supply to 0 Volts and 0.5 Amps Reverse +ve and –ve power supply leads and switch on power supply **Measure minimum operating drive voltage** **After motor stalls at close position, determine voltage to initiate drive** Allow mechanism to fully close cover and switch off power supply **Verify fully closed microswitch indicates correct status of cover** **(b) Motor B** Set power supply to 28 Volts and 0.5 Amps (using EGSE or manually) Switch on power supply, allow mechanism to fully open cover and switch off		
Para	**Activity**	**Results**	**Comments**
4.5	**Cont.** power supply		

	Verify fully open microswitch indicates correct status of cover Reverse +ve and –ve power supply leads, allow mechanism to fully close cover and switch off power supply **Verify fully closed microswitch indicates correct status of cover** Set power supply to 0 Volts and 0.5 Amps Reverse +ve and –ve power supply leads **Measure minimum operating drive voltage** Switch off power supply, increase power supply voltage to 28 Volts, allow mechanism to fully open cover and switch off power supply **Verify fully closed microswitch indicates correct status of cover** Set power supply to 0 Volts and 0.5 Amps Reverse +ve and –ve power supply leads and switch on power supply **Measure minimum operating drive voltage** **After motor stalls at close position, determine voltage to initiate drive** Allow mechanism to fully close cover and switch off power supply **Verify fully closed microswitch indicates correct status of cover**		
4.6 (a)	**<u>Thermal Vacuum Test</u>** **Prior to pump down** **(a) Motor A** Set power supply to 28 Volts and 0.5 Amps (using EGSE or manually) Switch on power supply Allow mechanism to fully open cover and switch off power supply **Verify fully open microswitch indicates correct status of cover** Reverse +ve and –ve power supply leads and switch on power supply Allow mechanism to fully close cover and switch off power supply **Verify fully closed microswitch indicates correct status of cover** Set power supply to 0 Volts and 0.5 Amps		
Para	**Activity**	**Results**	**Comments**
4.6	**Cont.** Reverse +ve and –ve power supply leads and switch on power supply **Measure minimum operating drive voltage**		

	Switch off power, increase voltage to 28 Volts, switch on power supply Allow mechanism to fully open cover and switch off power supply **Verify fully open microswitch indicates correct status of cover** Set power supply to 0 Volts and 0.5 Amps Reverse +ve and –ve power supply leads and switch on power supply **Measure minimum operating drive voltage** After cover rotates to close position and stalls, gradually increase power supply voltage until drive starts to rotate (Record voltage) Allow mechanism to fully close cover and switch off power supply **Verify fully closed microswitch indicates correct status of cover** **(b) Motor B** Set power supply to 28 Volts and 0.5 Amps (using EGSE or manually) Switch on power supply Allow mechanism to fully open cover and switch off power supply **Verify fully open microswitch indicates correct status of cover** Reverse +ve and –ve power supply leads and switch on power supply Allow mechanism to fully close cover and switch off power supply **Verify fully closed microswitch indicates correct status of cover** Set power supply to 0 Volts and 0.5 Amps Reverse +ve and –ve power supply leads and switch on power supply **Measure minimum operating drive voltage** Switch off power, increase voltage to 28 Volts, switch on power supply Allow mechanism to fully open cover and switch off power supply **Verify fully open microswitch indicates correct status of cover** Set power supply to 0 Volts and 0.5 Amps Reverse +ve and –ve power supply leads and switch on power supply		
Para	**Activity**	**Results**	**Comments**
4.6	**Cont.** **Measure minimum operating drive voltage** After cover rotates to close position and stalls, gradually increase power supply voltage until drive starts to rotate (Record voltage)		

	Allow mechanism to fully close cover and switch off power supply **Verify fully closed microswitch indicates correct status of cover**		
(b)	**After cold temperature soak at -25°C** **(a) Motor A** Set power supply to 28 Volts and 0.5 Amps (using EGSE or manually) Switch on power supply Allow mechanism to fully open cover and switch off power supply **Verify fully open microswitch indicates correct status of cover** Reverse +ve and –ve power supply leads and switch on power supply Allow mechanism to fully close cover and switch off power supply **Verify fully closed microswitch indicates correct status of cover** Set power supply to 0 Volts and 0.5 Amps Reverse +ve and –ve power supply leads and switch on power supply **Measure minimum operating drive voltage** Switch off power, increase voltage to 28 Volts, switch on power supply Allow mechanism to fully open cover and switch off power supply **Verify fully open microswitch indicates correct status of cover** Set power supply to 0 Volts and 0.5 Amps Reverse +ve and –ve power supply leads and switch on power supply **Measure minimum operating drive voltage** After cover rotates to close position and stalls, gradually increase power supply voltage until drive starts to rotate (Record voltage) Allow mechanism to fully close cover and switch off power supply **Verify fully closed microswitch indicates correct status of cover**		
Para	**Activity**	**Results**	**Comments**
4.6	**Cont.** **(b) Motor B** Set power supply to 28 Volts and 0.5 Amps (using EGSE or manually) Switch on power supply Allow mechanism to fully open cover and switch off power supply		

	Verify fully open microswitch indicates correct status of cover Reverse +ve and –ve power supply leads and switch on power supply Allow mechanism to fully close cover and switch off power supply **Verify fully closed microswitch indicates correct status of cover** Set power supply to 0 Volts and 0.5 Amps Reverse +ve and –ve power supply leads and switch on power supply **Measure minimum operating drive voltage** Switch off power, increase voltage to 28 Volts, switch on power supply Allow mechanism to fully open cover and switch off power supply **Verify fully open microswitch indicates correct status of cover** Set power supply to 0 Volts and 0.5 Amps Reverse +ve and –ve power supply leads and switch on power supply **Measure minimum operating drive voltage** After cover rotates to close position and stalls, gradually increase power supply voltage until drive starts to rotate (Record voltage) Allow mechanism to fully close cover and switch off power supply **Verify fully closed microswitch indicates correct status of cover**		
(c)	**After raising temperature to 25°C** **(a) Motor A** Set power supply to 28 Volts and 0.5 Amps (using EGSE or manually) Switch on power supply Allow mechanism to fully open cover and switch off power supply **Verify fully open microswitch indicates correct status of cover** Reverse +ve and –ve power supply leads and switch on power supply		
Para	**Activity**	**Results**	**Comments**
4.6	**Cont.** Allow mechanism to fully close cover and switch off power supply **Verify fully closed microswitch indicates correct status of cover** Set power supply to 0 Volts and 0.5 Amps Reverse +ve and –ve power supply leads and switch on power supply		

	Measure minimum operating drive voltage Switch off power, increase voltage to 28 Volts, switch on power supply Allow mechanism to fully open cover and switch off power supply **Verify fully open microswitch indicates correct status of cover** Set power supply to 0 Volts and 0.5 Amps Reverse +ve and –ve power supply leads and switch on power supply **Measure minimum operating drive voltage** After cover rotates to close position and stalls, gradually increase power supply voltage until drive starts to rotate (Record voltage) Allow mechanism to fully close cover and switch off power supply **Verify fully closed microswitch indicates correct status of cover** **(b) Motor B** Set power supply to 28 Volts and 0.5 Amps (using EGSE or manually) Switch on power supply Allow mechanism to fully open cover and switch off power supply **Verify fully open microswitch indicates correct status of cover** Reverse +ve and –ve power supply leads and switch on power supply Allow mechanism to fully close cover and switch off power supply **Verify fully closed microswitch indicates correct status of cover** Set power supply to 0 Volts and 0.5 Amps Reverse +ve and –ve power supply leads and switch on power supply **Measure minimum operating drive voltage** Switch off power, increase voltage to 28 Volts, switch on power supply Allow mechanism to fully open cover and switch off power supply		
Para	**Activity**	**Results**	**Comments**
4.6	**Cont.** **Verify fully open microswitch indicates correct status of cover** Set power supply to 0 Volts and 0.5 Amps Reverse +ve and –ve power supply leads and switch on power supply **Measure minimum operating drive voltage**		

	After cover rotates to close position and stalls, gradually increase power supply voltage until drive starts to rotate (Record voltage) Allow mechanism to fully close cover and switch off power supply **Verify fully closed microswitch indicates correct status of cover** **At ambient after completion of 4 cycles** **(a) Motor A** Set power supply to 28 Volts and 0.5 Amps (using EGSE or manually) Switch on power supply Allow mechanism to fully open cover and switch off power supply **Verify fully open microswitch indicates correct status of cover** Reverse +ve and –ve power supply leads and switch on power supply Allow mechanism to fully close cover and switch off power supply **Verify fully closed microswitch indicates correct status of cover** Set power supply to 0 Volts and 0.5 Amps Reverse +ve and –ve power supply leads and switch on power supply **Measure minimum operating drive voltage** Switch off power, increase voltage to 28 Volts, switch on power supply Allow mechanism to fully open cover and switch off power supply **Verify fully open microswitch indicates correct status of cover** Set power supply to 0 Volts and 0.5 Amps Reverse +ve and –ve power supply leads and switch on power supply **Measure minimum operating drive voltage** After cover rotates to close position and stalls, gradually increase power supply voltage until drive starts to rotate (Record voltage)		
(d)			
Para	**Activity**	**Results**	**Comments**
4.6	**Cont.** Allow mechanism to fully close cover and switch off power supply **Verify fully closed microswitch indicates correct status of cover** **(b) Motor B** Set power supply to 28 Volts and 0.5 Amps (using EGSE or manually)		

	Switch on power supply Allow mechanism to fully open cover and switch off power supply **Verify fully open microswitch indicates correct status of cover** Reverse +ve and –ve power supply leads and switch on power supply Allow mechanism to fully close cover and switch off power supply **Verify fully closed microswitch indicates correct status of cover** Set power supply to 0 Volts and 0.5 Amps Reverse +ve and –ve power supply leads and switch on power supply **Measure minimum operating drive voltage** Switch off power, increase voltage to 28 Volts, switch on power supply Allow mechanism to fully open cover and switch off power supply **Verify fully open microswitch indicates correct status of cover** Set power supply to 0 Volts and 0.5 Amps Reverse +ve and –ve power supply leads and switch on power supply **Measure minimum operating drive voltage** After cover rotates to close position and stalls, gradually increase power supply voltage until drive starts to rotate (Record voltage) Allow mechanism to fully close cover and switch off power supply **Verify fully closed microswitch indicates correct status of cover**		

DISTRIBUTION LIST

INTERNAL	EXTERNAL
I K Stewart	N Morris (RAL)
R Coupe	
N Crossland	
S Yardley	

CHANGE RECORD

CHANGE NUMBER	CLASS	CHANGE DETAILS	ISSUE
3164-00306	-	First Issue	1
3164-00328	II	Change in test requirements	2
3164-	II	Change in thermal vacuum test cycles	3