HIRDLS

HIGH RESOLUTION DYNAMICS LIMB SOUNDER

Originator: Tony Forward Date: 5 November 2003

Subject/Title: **SUNSHIELD SUBSYSTEM SPECIFICATION DOCUMENT**

Description/Summary/Contents:

This specification defines the performance requirements for the Sunshield Assembly and the Space View Aperture Assembly which are derived from the HIRDLS Instrument Technical Specification (ITS).

Keywords: HIRDLS, Sunshield, Space View Aperture, Mechanism

Purpose of this Document: SSH and SVA Requirements Specification

Reviewed/Approved by:	/s/ N.Koepp-Baker	/s/ J.W.Whitney	
Date (yy-mm-dd):			

Rutherford Appleton Laboratory
Chilton
Didcot
Oxfordshire
OX11 0QX
United Kingdom

Matra Marconi Space UK
Anchorage Road
Portsmouth
Hants PO3 5PU
United Kingdom

EOS

Approved by:

Nigel Morris, UK Programme Manager Date:

John.G Whitney, Systems Engineer Date:

W.R.Howard, Configuration Manager Date:

Concurrence:

Michael A. Dials, Technical Manager Date:

W.R.Howard, Product Assurance Date:

HIRDLS

SUNSHIELD SUBSYSTEM

SPECIFICATION DOCUMENT

Prepared by: ---------- Date: ----------

Responsible Engineer: ---------- Date: ----------

Quality Assurance: ---------- Date: ----------

Project Manager: ---------- Date: ----------

Ó **MATRA MARCONI SPACE UK LIMITED**

THE COPYRIGHT IN THIS DOCUMENT IS THE PROPERTY OF MATRA MARCONI SPACE UK LIMITED. This document is supplied by Matra Marconi Space UK Limited on the express terms that it is to be treated as confidential and that it may not be copied, used or disclosed to others for any purpose except as expressly authorised under the terms of Contract No N2A 3R 0386.

Any person, other than the authorised holder, who finds or otherwise obtains possession of the document, should post it, together with his/her name and address, to the Registry, Matra Marconi Space UK Limited, Anchorage Road, Portsmouth, England, PO3 5PU. Postage will be refunded.

CONTENTS

1. INTRODUCTION 8
1.1 Scope 8
1.2 Overview of HIRDLS 8
1.3 Sunshield Assembly Description 8
1.4 Space View Aperture Assembly Description 8
2. DOCUMENTS 9
2.1 Applicable Documents 9
2.2 Reference Documents 9
2.3 Precedence 10
3. REQUIREMENTS 11
3.1 SSH Assembly 11
3.1.1 SSH General Description 11
3.1.2 SSH Performance 11
3.1.2.1 Door Size and Construction 11
3.1.2.2 Hinge Position 11
3.1.2.3 Door Angle and Opening/Closing times 11
3.1.2.4 Door Positional Resolution 12
3.1.2.5 Knowledge of Door Position 12
3.1.2.6 Torque Disturbances 12
3.1.2.7 Uncompensated Momentum 12
3.1.2.8 Hold-down and Release Mechanism 12
3.1.2.9 Modes of Operation 13
3.1.2.10 Sealing 13
3.1.2.11 Sun Sensors 13
3.1.2.12 Loom 13
3.1.2.13 Aperture Plate 14
3.2 SVA Assembly 14
3.2.1 SVA General Description 14
3.2.2 SVA Performance 15
3.2.2.1 Cover 15
3.2.2.2 Actuator 15
3.2.2.2.1 Number of Operating Cycles 15
3.2.2.3 Cover Opening Time 15
3.2.2.4 Torque Disturbances 16
3.2.2.5 Uncompensated Momentum 16
3.2.2.6 Outer Baffle 16
3.2.2.7 Seal 16
3.2.2.8 Shield Status Sensors 16
3.2.2.9 Loom 16
3.2.2.10 Albedo Shield 17
3.3 Electrical Requirements 17
3.3.1 Electrical Interfaces 17
3.3.2 Supply Voltage 17
3.3.3 Power Consumption 17
3.3.4 Status Sensors 17
3.3.5 Connectors 17
3.3.6 Grounding 17
3.3.7 Electromagnetic Compatibility (TBC) 17

3.3.7.1 General ... 18
3.3.7.2 Electro-Explosive Devices (EED's) ... 18
3.3.8 Electrostatic Discharge ... 18
3.4 Mechanical Requirements ... 18
3.4.1 Mechanical Design ... 18
3.4.1.1 General ... 18
3.4.2 Mechanical Interfaces ... 18
3.4.3 Strength Requirements ... 18
3.4.3.1 Quasi-Static Design Load Factor (TBC) ... 18
3.4.3.2 Test Loads ... 19
3.4.3.3 Margins of Safety ... 19
3.4.3.4 On-orbit Loads ... 19
3.4.3.5 Load Distribution ... 19
3.4.3.6 Material Properties and Allowables ... 19
3.4.4 Stiffness Requirements ... 20
3.4.5 Fatigue ... 20
3.4.6 Thermal Stresses ... 20
3.4.7 Torque Margin ... 20
3.4.8 Contamination ... 20
3.4.9 Lubrication ... 20
3.4.10 Envelope ... 21
3.4.11 Mass Properties ... 21
3.4.12 Ground Operation ... 21
3.5 Thermal Requirements ... 21
3.5.1 Thermal Design Margins ... 21
3.5.2 Thermal Control Techniques ... 21
3.5.3 Thermal Design Techniques ... 22
3.5.4 Thermal Dissipation ... 22
3.5.5 Control of Thermal Finishes ... 22
3.6 Environmental Conditions ... 22
3.6.1 Ground Operation Environment ... 22
3.6.1.1 Linear Acceleration ... 22
3.6.1.2 Handling Shock ... 23
3.6.1.3 Climatic Conditions ... 23
3.6.1.4 Vibration ... 23
3.6.2 Launch/Ascent Phase ... 23
3.6.2.1 Pressure Profile (Depressurisation) ... 24
3.6.3 Orbit Phase ... 24
3.6.4 Nominal Mission ... 25
3.6.5 Storage ... 25
3.7 Reliability ... 25
3.7.1 Single Point Failure ... 25
3.7.2 Operational Life ... 25
4. DESIGN VERIFICATION REQUIREMENTS ... 26
4.1 General ... 26
4.1.1 Vibration Tests ... 26
4.1.2 Thermal Tests ... 26
4.1.3 EMC Tests ... 26
4.1.4 Mass Properties ... 26
5. PRODUCT ASSURANCE AND SAFETY PROVISION ... 27
5.1.1 Selection of Specifications and Standards ... 27
5.1.2 Parts, Materials and Processes ... 27

5.1.2.1 Parts ... 27
5.1.2.2 Materials ... 27
5.1.2.3 Processes ... 27
5.1.3 Standard and Commercial Parts ... 27
5.1.4 Moisture and Fungus Resistance ... 28
5.1.5 Corrosion Prevention and Control ... 28
5.1.5.1 Corrosion Resistance ... 28
5.1.5.2 Dissimilar Metals ... 28
5.1.5.3 Corrosive Fumes ... 28
5.1.5.4 Protective Treatment ... 28
5.1.5.5 Coatings and Adhesives ... 29
5.1.5.6 Finish ... 29
5.1.5.7 Protective Covers ... 29
5.1.6 Interchangeability and Replaceability ... 29
5.1.7 Workmanship ... 29
5.1.8 Identification and Marking ... 29
5.2 Safety Provisions ... 30
5.2.1.1 Fire (Flammability) Control ... 30
5.2.1.2 Critical Pressure ... 31
5.3 Documentation ... 31
5.4 Logistics ... 31
5.4.1 Maintenance ... 31
5.4.2 Spares ... 31
6. QUALITY ASSURANCE PROVISIONS ... 32
6.1 General Requirements ... 32
6.1.1 Assembly and Test Policy ... 32
6.1.1.1 Classification of Tests ... 32
6.1.2 Supplier (MMS) Responsibilities ... 32
6.1.3 Customer Responsibilities ... 32
6.1.4 Assembly, Integration and Test Facilities ... 32
6.2 Verification of Performance and Design Requirements ... 33
6.2.1 Verification of Design Qualification ... 33
6.2.2 Failure Criteria ... 33
6.2.3 Rejection and Retest ... 33
7. PACKAGING AND SHIPPING ... 39
7.1 Cleaning ... 39
7.2 Preservation and Unit Packaging ... 39
7.3 Packaging Design Requirements ... 39
7.4 Special Handling, Loading Techniques and Devices ... 39
7.5 Marking for Shipping ... 39

FIGURES

Figure 3-1 HIRDLS General Configuration ... 14

TABLES

Table 4-1 Vibration Test Levels ... 26
Table 4-2 Thermal Test Levels ... 26

Table 6-1 Verification Matrix 34

1. INTRODUCTION

1.1 Scope

This specification defines the performance requirements for the Sunshield Assembly and the Space View Aperture Assembly, which form part of the High Resolution Dynamics Limb Sounder (HIRDLS), based upon and in accordance with the HIRDLS Instrument Technical Specification (ITS).

1.2 Overview of HIRDLS

HIRDLS is an IR radiometer designed to view the atmosphere of the earth at the limb from a 705 km sun-synchronous polar orbit. The optical line of sight (LOS) of the Instrument is directed at the limb, in the anti-velocity (backwards) direction as the spacecraft orbits the earth. The Instrument measures atmospheric IR emissions in 21 spectral channels simultaneously, while scanning the limb both vertically and horizontally. The nominal mission duration in orbit is 5 years. The general arrangement of the Instrument is illustrated in Figure 3-1 identifying the main units via a key and defining the instrument co-ordinate system and origin.

1.3 Sunshield Assembly Description

The Sunshield Assembly (SSH) prevents direct sunlight from entering the Instrument optics and reduces solar and earth albedo heat gains into the viewing aperture. It consists of a fixed external sunshield, moveable Sunshield Door and associated drive mechanism, Hold-down/Release Mechanism, and Sun Sensors. This specification applies only to the Sunshield Door, Drive Mechanism and the Hold-down/Release Mechanism. During the course of one orbit the Sunshield Door will remain open for most of the time, however as the Spacecraft approaches sunset the door will slowly close to prevent sunlight from entering directly into the aperture. After sunset the door will quickly re-open.

The Sunshield Door is located on the +Z face of the HIRDLS Instrument (Figure 3-1).

1.4 Space View Aperture Assembly Description

The Space View Aperture (SVA) is essentially a hole in the STH +Y panel to allow the instrument to have a view to space as its cold reference. The assembly comprises, in addition to this hole, a cover for the hole, an opening mechanism for the covers, to shield the instrument from stray light and Earth albedo. A baffle which attaches to the SVA shall be provided by Lockheed Martin.

The function of the Assembly is to open fully a Cover situated over the chopper view-to-Space aperture and to prevent direct sunlight, unwanted solar reflections and earth albedo entering the instrument optics. No intermediate position is required. Sensors are provided to indicate the status of the Cover, i.e. fully open or fully closed.

The Space View Aperture Assembly is mounted on the +Y panel of the STH. Its location is shown in Figure 3-1.

2. DOCUMENTS

The following documents, of the latest issue and date, form part of the present specification to the extent specified herein.

2.1 Applicable Documents

	Document No.	Document Name
AD1	SP-HIR-13	Instrument Technical Specification
AD2	GSFC 424-11-13-01	Mission Assurance Requirements
AD3	PM-HIR-004	HIRDLS Configuration Management Plan
AD4	PA-HIR-006	HIRDLS Contamination Control Plan
AD5	GSFC-422-11-12-01	General Interface Requirements Document
AD6	SP-HIR-200	Internal Interface Control Document (System Section)
AD7	SP-HIR-212	STH to SSH Interface Control Document
AD8	SP-HIR-111	HIRDLS Thermal ICD
AD9	SP-HIR-224	SSH to TSS Interface Control Document
AD10	SP-HIR-227	SSH/IPS Interface Control Document
AD11	SP-HIR-TBD	HIRDLS EMI Requirements
AD12	TP-MMS-248	HIRDLS Design, Development & Test Plan
AD13	TP-HIR-008	HIRDLS Performance Verification Plan (TBC)
AD14	-	Not Used
AD15	-	Not Used
AD16	SP-HIR-002	HIRDLS Spares Plan
AD17	GSFC 424-28-21-06	Unique Instrument Interface Document (UIID) for the High Resolution Dynamics Limb Sounder (HIRDLS)
AD18	SW-MMS-358	SSH Field of View Files
AD19	PL-HIR-165	HIRDLS Program Approved Parts List

2.2 Reference Documents

	Document No.	Document Name
RD1	TC-LOC-011	Description of the Space View Optical Design
RD2	MIL-STD-810	Environmental test Methods & Engineering Guidelines
RD3	MIL-STD-889B(3)	Dissimilar Metals
RD4	ASTM-E595-77	Total Mass Loss & Collectable Volatile Condensable Materials from Outgassing in a Vacuum Environment
RD5	FED-STD-123	Marking for Shipment “Civil Agencies”

2.3 Precedence

In the event of conflict between this specification and the content of other referenced documents the following order of precedence shall apply.

a. The Contract

b. The Statement of Work

c This Document

d. Applicable Documents

e. Reference Documents

3. REQUIREMENTS

3.1 SSH Assembly

3.1.1 SSH General Description

The general arrangement of the instrument is illustrated in Figure 3-1 identifying the main units via a key and defining the instrument co-ordinate system and origin.

The Moving Sunshield Assembly shall incorporate eight main elements are shown below:

a. Sunshield Door

b. Deployment Mechanism (DM)

c. Hold-down and Release Mechanism (HRM)

d. Frame

e. Seal

f. Loom

g. Sun Sensors

h. Aperture Plate

3.1.2 SSH Performance

3.1.2.1 Door Size and Construction

The Sunshield Door shall be of adequate size to fully cover the HIRDLS Aperture Plate when closed.

The door shall be constructed such that no light can pass through into the inside of the Instrument when it is in the fully closed position (AD1, Section 4.2.3.1).

3.1.2.2 Hinge Position

The Door shall be supported on a hinge along the -Y side of the aperture.

3.1.2.3 Door Angle and Opening/Closing times

The Sunshield Door shall be capable of opening through an angle of 123°. The time required to move the Door to the Safe position from any other position shall not exceed 30 seconds. The Safe

position shall be taken as open 60°. All other commanded door motions shall be completed in a time not to exceed T given by :

$$T = (A/2) + 1$$

where, T = Time (secs).
A = required change of door angle in degrees.

3.1.2.4 Door Positional Resolution

The Deployment mechanism shall be capable of moving the Door in angular increments of no greater than 0.25°.

3.1.2.5 Knowledge of Door Position

A door position sensor shall be fitted to the SSH, which shall be capable of measuring the door position relative to the closed position to an accuracy of 0.25° or less, and with an absolute accuracy over the operational life of the Instrument of ± 2° (AD1, Section 4.2.3.3).

3.1.2.6 Torque Disturbances

The angular velocity profile of the door throughout any commanded movement shall be such that the torque disturbance constraints of AD5 Section 3.10 are not violated (ref:- AD1, Section 4.2.4.3.2).

3.1.2.7 Uncompensated Momentum

Angular momentum reacted from the instrument to the Spacecraft, as a result of the SSH Mechanism operating, shall be less than 0.5 Nms.

3.1.2.8 Hold-down and Release Mechanism

The Hold-down and release Mechanism (HRM) shall hold the Sunshield Door in a latched condition during launch, and release the Door on command from the IPS when in orbit (AD1, Section 4.2.3.4).

The HRM shall be easily accessible for manual latching and shall be manually latchable without the use of special tools when the Instrument is unpowered. The HRM shall not require electrical power to remain latched.

During ground operation it may be necessary to remotely fully close and relatch the door. After launch the door is not required to be fully closed and relatched, however, it is necessary to return the door to its virtually closed position known as the `home' position. In this position the door is parked outside of the latch but shall be sufficiently closed to prevent the entry of direct sunlight into the aperture.

Release of the door shall be initiated by an electro-mechanical device. Alternative types of actuator (e.g. thermal cutter or High Output Paraffin Wax actuator (HOP) may be considered on condition they are compliant with the contamination requirements of the instrument (AD1, Section 4.2.3.4).

The HRM shall release the Door within five minutes of receiving the command from the IPS (AD1, Section 4.2.3.4).

A means of verifying the latch position shall be included in the design of the SSH.

The envelope occupied by the HRM shall not protrude into the light path defined by the aperture (AD1).

3.1.2.9 Modes of Operation

The SSH shall operate in the modes described in AD1 Table 3.2-1.

3.1.2.10 Sealing

A seal shall be provided to prevent the ingress of particulates into the Instrument when the Sunshield Door is closed. The seal is not required to be gas tight. No part of the seal shall interfere with the aperture.

The door shall be held firmly closed against the seal located on the door frame by the Hold-down and Release mechanism (HRM).

When the door is closed and latched a seal fitted between the Sunshield and the frame shall ensure any direct (line of sight) gaps shall be less than 0.1 mm diameter. Where gaps are greater than 0.1 mm a first order labyrinth shall be provided to prevent direct line of sight access to the sunshield aperture. The above approach should provide minimum risk for contamination and allow verification using stray light and feeler gauges.

When the door is unlatched, it shall be able to move freely away from the seal without sticking.

3.1.2.11 Sun Sensors

Sun Sensors, independent of the door position sensor, shall be used in four redundant pairs to determine when the sun is illuminating the -X face of the Instrument such that it could potentially shine into the Instrument aperture. The positions for the Sun Sensors shall be determined in accordance with AD1 Section 4.2.3.5 and shown in AD7.

3.1.2.12 Loom

The wiring from the actuator, latch and sensors shall be terminated by connectors mounted at a suitable location on the SSH assembly.

3.1.2.13 Aperture Plate

An aperture plate shall be mounted on the inboard face of the frame. The aperture is dimensioned in AD18.

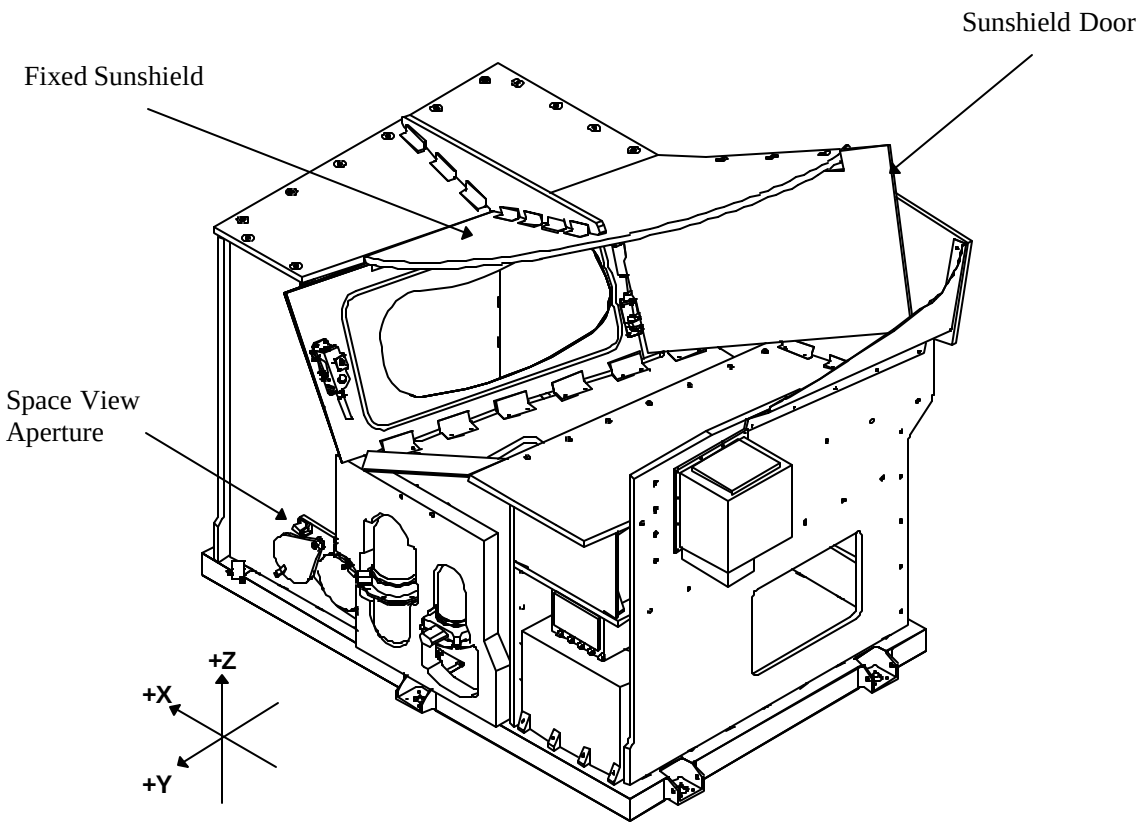

Figure 3-1 HIRDLS General Configuration

3.2 SVA Assembly

3.2.1 SVA General Description

The general arrangement of the HIRDLS instrument is shown in Figure 3-1.

The chopper reference has a view to space as a cold reference through an aperture in the STH. The SVA Assembly is used to close off this aperture during integration, testing and launch. To prevent stray light inputs, an Albedo Shield is included as a part of the SVA Assembly.

The mechanism shall allow for the Cover to be manually moved from open to closed position and held without the use of electrical power. Opening can be achieved electrically.

When closed the Cover also acts as a dust seal but there is no requirement for the seal to be gas tight.

The Assembly incorporates seven main elements as shown:

a. Cover

b. Actuator

c. Outer Baffle

d. Seal

e. Shield Status Sensors

f. Loom

g. Albedo Shield

3.2.2 SVA Performance

3.2.2.1 Cover

The Cover is a disc which rotates on a centre located outside its periphery. The cover shall fully obscure the aperture in the Radiator Panel when in its closed position. When open it shall fully expose the aperture. The surface finish shall be compatible with the thermal requirements set out in Section 8 of AD6.

3.2.2.2 Actuator

Redundancy shall be incorporated in all driving devices with adequate torque margin to overcome friction under worst case conditions.

Off-loading mechanisms for the launch configuration shall be avoided if possible.

3.2.2.2.1 Number of Operating Cycles

The Actuator shall be capable of performing 110 operating cycles; sufficient for on-ground testing and in-orbit operations.

3.2.2.3 Cover Opening Time

The Cover shall be capable of being fully open within 5 minutes of receiving the command from the IPS.

3.2.2.4 Torque Disturbances

The angular velocity profile of the Cover throughout any commanded movement shall be such that the torque disturbance constraints of the AD5 section 3.10 are not violated.

3.2.2.5 Uncompensated Momentum

Angular momentum reacted from the Instrument to the S/C platform shall be less than 0.5 Nms.

3.2.2.6 Outer Baffle

The purpose of the Outer Baffle is to prevent stray light paths within the instrument. The Outer Baffle may also provide the basic structure for supporting the elements of the Assembly and to provide the mounting interface with the STH.

Circular baffles shall be machined on the inside of the tube to minimise reflected light reaching the instrument optics, in accordance with AD8.

External and internal surface finish shall be compatible with the instrument optical requirements specified in AD9 and thermal requirements as specified in Section 8. of AD1.

Tube and baffle dimensions are specified on the Assembly ICD figure <TBD>.

3.2.2.7 Seal

.A seal shall be provided to prevent the ingress of particulates into the Instrument when the Cover is closed. The seal is not required to be gas tight. No part of the seal shall interfere with the field of view.

The Cover shall be held firmly closed against the seal at all times other than when commanded from the IPS to open.

The seal shall be capable of excluding dust particles of size .05 mm diameter with no pressure differential across it.

3.2.2.8 Shield Status Sensors

Sensors shall be fitted to the Assembly to indicate the position of the Cover, i.e. fully open or fully closed.

3.2.2.9 Loom

The wiring from the actuator and shield status sensors shall be terminated by a connector mounted at a suitable location on the SVA assembly.

3.2.2.10 Albedo Shield

The Albedo Shield is a baffle attached to the SVA to prevent Earth albedo penetrating the Space View Aperture. Its dimensions and thermal finish shall be as defined in AD8.

3.3 Electrical Requirements

3.3.1 Electrical Interfaces

The SSH and SVA shall have an electrical interface with the Instrument Power Subsystem (IPS), as defined in AD10. Connector and pin assignments are detailed in AD10.

3.3.2 Supply Voltage

The power shall be supplied from the Sunshield Control Electronics, located in the IPS (AD1, Section 4.2.5.1.2). The supply voltage shall be as defined in AD10.

The SVA Assembly shall operate at a supply voltage detailed in AD10.

3.3.3 Power Consumption

The power consumption of the Moving Sunshield Assembly in operation and the power required for release shall not exceed the values given in AD10. Operational heat power requirements TBD.

3.3.4 Status Sensors

The output from the SSH latch status sensor is defined in AD10.

The output from the SVA cove status sensor shall be as indicated in AD10.

3.3.5 Connectors

Details of connectors are given in AD10.

3.3.6 Grounding

The SSH and SVA shall have clearly identified grounding points to which all metallic sub-chassises and enclosures shall be electrically connected. Moving doors or covers shall be electrically connected to the grounding point with a resistance no greater than 0.1Ω.

3.3.7 Electromagnetic Compatibility (TBC)

3.3.7.1 General

The SSH and SVA designs shall be compatible with the requirements defined in AD11.

3.3.7.2 Electro-Explosive Devices (EED's)

The use of EED's is not permitted in the operation of the SSH or SVA (AD1, Section 4.2.3.4).

3.3.8 Electrostatic Discharge

The SSH and SVA designs shall be compatible with the Instrument in electrostatic discharge (ESD) control requirements delineated in AD11.

3.4 Mechanical Requirements

3.4.1 Mechanical Design

3.4.1.1 General

The Assembly shall possess sufficient strength, rigidity and other characteristics required to survive the critical loading conditions that exist within the envelope of the mission requirements.

Excessive design margins shall not be incorporated into the equipment design; the design aim shall be to meet as closely as possible the loads resulting from the defined environmental and test conditions.
The Assembly shall be designed for minimum mass commensurate with adequate strength to survive the environmental and test conditions. The design shall meet the interface constraints defined in Section 3.4.2 of this document.

3.4.2 Mechanical Interfaces

The SSH and SVA shall have mechanical interfaces with the Structure/Thermal Subsystem (STH), as defined in AD7.

3.4.3 Strength Requirements

3.4.3.1 Quasi-Static Design Load Factor (TBC)

The Sunshield Assembly, in the latched condition, shall be designed to withstand a quasi-static design load of 45g applied at its CoM separately in each co-ordinate direction without failure or degradation of performance. The load factor includes a qualification factor of 1.4.

The SVA Assembly shall be designed to withstand a quasi-static design load of 45g applied at its CoM separately in each co-ordinate direction without failure or degradation of performance. The load factor includes a qualification factor of 1.4.

3.4.3.2 Test Loads

The Subsystem shall be designed to withstand the environmental test loads defined in Section 4.0 of this document. These loads shall be multiplied by the following minimum safety factors;

Yield Loads : 1.25 x qualification loads
Ultimate Loads: 1.4 x qualification loads

3.4.3.3 Margins of Safety

When considering yield or ultimate loads conditions, all components of the subsystem must have a margin of safety which is positive when calculated using the following formula:

$$\text{Margin of Safety} = \frac{F}{f} - 1$$

where F= Allowable stress or load
f = Calculated applied stress or load

3.4.3.4 On-orbit Loads

In the unlatched condition the SSH assembly shall be designed to withstand the on-orbit environment defined in Section 3.6.3 applied in any direction, without failure or degradation of performance.
The SVA assembly shall be designed to withstand the on-orbit environment defined in Section 3.6.3 applied in any direction, without failure or degradation of performance

3.4.3.5 Load Distribution

Load distribution internal to the SSH and SVA assemblies shall be determined by detailed and comprehensive load and stress analysis using appropriate and conservative methods. The effects of deformations, non-linearities, temperatures and variations on the internal distribution shall be included in the analysis of load distributions.

3.4.3.6 Material Properties and Allowables

Material strengths and other mechanical and physical properties shall be selected from authorised sources of reference, such as British Standards, and from contractor test values when appropriate. Strength allowables and other mechanical properties used shall be appropriate to the loading conditions, design environments and stress states for each structural member. Allowable material strengths used in design shall include the effects of temperature and time associated with the design environment

3.4.4 Stiffness Requirements

The SSH shall have a first major resonant frequency greater than 120 Hz, with the door in its latched condition, when attached to a rigid fixture by its mounting locations.

The SVA shall have a first resonant frequency greater than 120 Hz, with the door in its closed condition, when attached to a rigid fixture by its mounting locations.

3.4.5 Fatigue

The Assembly fatigue life must be sufficient to withstand the cumulative effect of three complete qualification-level test programme sequences, each with its respective over-test limit, followed by the operational life.

The effects of repeated loads and elevated temperatures shall be considered by rational methods or analysis in the equipment/subsystem design. The design adequacy of the equipment in flight shall not be impaired by fatigue damage resulting from exposure to non-flight and launch environments.

3.4.6 Thermal Stresses

The effects of thermal stresses shall be combined with the appropriate load stresses when calculating required strength. Thermal stresses based on the applied temperatures, heating rates etc., shall be considered limit values.

3.4.7 Torque Margin

Actuators shall meet the torque requirements specified in AD2 Section 3.4.5.3.

3.4.8 Contamination

Materials shall be selected which do not release debris or contaminants likely to degrade the instrument optics during its life, in accordance with AD2 Section 6.2.

3.4.9 Lubrication

Where parts require lubrication preference shall be given to a space approved dry lubricant. If a wet lubricant is essential to the operation of the component sealing and barrier coating techniques shall be employed to minimise the risk of contamination of adjacent optical surfaces within the instrument. Selection of the lubricant shall be in accordance with AD2, Section 6.2.7.

3.4.10 Envelope

The static and dynamic envelopes of the SSH and SVA shall not exceed the static and dynamic envelopes of the instrument as shown in AD17.

3.4.11 Mass Properties

The total mass of the Moving Sunshield Assembly, excluding mounting bolts, shall not exceed 5.0 kg (AD1, Section 4.2.4.2).

3.4.12 Ground Operation

The SSH shall be capable of opening and closing the Sunshield Door fully in a 1g environment, on command from the IPS, using power from the S/C and without GSE, with the Instrument Z-axis within 30° of vertical (i.a.w. AD1 Section 4.2.2.1).

3.5 Thermal Requirements

The thermal interfaces of the Moving Sunshield Assembly are:

a. Radiative interchange with the internal HIRDLS environment

b. Radiative interchange with the external environment

c. Conductive interfaces with the outer structure

Specific thermal interface requirements, including temperature limits of conductive interfaces, flatness of contact surfaces, thermal properties of surface finishes, and limits on heat flow densities through conductive interfaces are defined in AD8.

3.5.1 Thermal Design Margins

The Assembly thermal design shall ensure that all performance requirements are met over the temperature limits defined in AD8.

3.5.2 Thermal Control Techniques

a. The SSH and SVA assemblies shall, with the exception of heaters, employ passive means of thermal control. The assemblies shall be designed such that all internal heat sources have adequate heat flow paths for dissipation and shall be designed to minimise the occurrence of hot spots.

b. Mounting provisions and heat flow paths shall be designed such that thermal flux densities do not exceed the values specified in HIRDLS Mechanical and Thermal Interface Requirement Specification (AD6). The mounting surfaces shall be designed to minimise the occurrence of hot spots.

c. The thermal finish shall be as defined in AD8.

3.5.3 Thermal Design Techniques

a. A thermal analysis shall be conducted in order to demonstrate that all components operate within temperature limits which will not adversely affect the reliability of the Assembly under any steady state/transient operating/non-operating conditions in conjunction with the relevant thermal interfaces.

   Analysis shall be conducted utilising SINDA or similar thermal software techniques where appropriate. The absence of the use of thermal software or the use of alternative software shall be subject to approval by the customer.

b. The thermal stress requirements defined in Section 3.4.6 shall be satisfied when the temperature of the Assembly is within the flight operating limits defined in AD5. Compliance with the thermal stress requirements when the Assembly is operating up to the qualification limits defined in AD2 is not required, but the part stresses shall be less than the maximum values defined by the part manufacturer.

3.5.4 Thermal Dissipation

The thermal dissipation requirements are defined in AD1 Section 4.2.

3.5.5 Control of Thermal Finishes

Protection and cleaning of thermal finishes shall be performed in accordance with approved process specification and procedures and in accordance with AD4.

3.6 Environmental Conditions

3.6.1 Ground Operation Environment

The system shall meet all requirements after exposure to the environmental conditions during assembly, integration, storage and transportation. Normal modes of transportation shall be used by air, sea or road.

3.6.1.1 Linear Acceleration

The maximum linear acceleration for the system shall not exceed 1.5 g during assembly, integration and storage.

Mechanical loads experienced during handling and transport operations shall assume a load factor of 3.0 g vertically and 2.0 g horizontally which will cover loading conditions during hoisting of the transport container, handling during integration and transportation.

3.6.1.2 Handling Shock

During handling of the system in its container it shall withstand a drop from 100 mm height assuming that one point of contact between container and the ground is already made.

3.6.1.3 Climatic Conditions

a. AIT

Class 10,000 (TBC)

b. Storage and Transportation

During storage and transportation the system shall be held in its container within a sheltered area and shall be designed to withstand any combination of the following range of climatic conditions:

Temperature	0 to 35°C
Relative Humidity	0 to 60%
Pressure	0.7 to 1.1 bar
Rate of Pressure Change	20 mbar/sec
Cycles of Pressure Changes	Less than 10 for aircraft transportation

During low temperature exposure utmost care shall be exercised that no condensation occurs on any equipment or component.

3.6.1.4 Vibration

The vibration levels during air and surface transportation shall not exceed the acceptance test levels defined in AD1 Section 3.11.

3.6.2 Launch/Ascent Phase

During the launch/ascent phase of the mission, the subsystem will be exposed to environments which are less severe than specified for flight acceptance verification testing.

The subsystem shall meet all requirements after exposure to the environmental conditions experienced during launch/ascent which includes the following:

a. Depressurisation at a minimum atmospheric pressure decay rate as specified in AD1 Section 3.11.

b. Shock environment defined in AD1 Section 3.11.

c. Random vibration within the envelope specified in AD1 Section 3.11.

d. Acoustic levels within the levels specified in AD1 Section 3.11.

e. Sine vibration within the envelope specified in AD1 Section 3.11.

3.6.2.1 Pressure Profile (Depressurisation)

The subsystem design shall be such that pressurisation / depressurisation does not cause failure of any component.

3.6.3 Orbit Phase

HIRDLS will be integrated onto the EOS-A Chemistry Mission and will be launched into a sun synchronous orbit with the following nominal characteristics (see AD4 Section 9.1 GIRD):-

Altitude	705 km
Inclination	98.2°
Ascending Node	1345 hours ± 15 min
Repetition Interval	233 revolutions/16 days
Repetition Accuracy	±20 km (3σ) at equator crossing
Solar Beta Angle (β)	$16° < \beta < 36°$

During the orbit phase the subsystem will be exposed to environments which are less severe than specified for flight acceptance verification testing.
The environment encountered in orbit will include the following:

a. The in-orbit total ionising dose radiation is defined in the dose curve of AD1 Section 3.11.10.

b. The in-orbit cosmic ray and high energy proton environment defined in AD1 Sections 3.11.10.

c. The in-orbit atomic oxygen environment specified in AD1 Section 3.11.11.

d. The in-orbit thermal environment defined in AD5.

e. The in-orbit random vibration environment defined in AD1 Table 3.11.7.

f. Maximum acceleration of 0.02 g.

g. Electromagnetic compatibility requirements defined in AD1 Section 3.7.6.

3.6.4 Nominal Mission

The subsystem shall be designed to meet the performance requirements throughout a minimum lifetime of 5 years in-orbit, after completing its acceptance tests, spacecraft integration and test, and up to 2 years awaiting launch. Items with a design lifetime determined by consumables or coatings should be designed for an operating life in space of 6 years.

Operation outside the modes defined in the Instrument Technical Specification (AD1) is not anticipated.

3.6.5 Storage

The SSH and SVA shall meet all the performance requirements after being stored for a period of 4 years in a facility meeting the requirements stated in Section 3.6.1. Maintenance during storage shall not be permitted. After a period of storage, it shall be permissible to replace the SSH door seal.

3.7 Reliability

The assessed probability, using an assessment method as defined in the Mission Assurance Requirements (AD2), that the combined SSH and SVA assemblies shall meet the requirements of this specification throughout the operational lifetime shall not be less than 0.98 (AD1, Section 4.2.8).

3.7.1 Single Point Failure

Single point failures shall be avoided as far as possible. Motors and actuators shall have redundant windings.

3.7.2 Operational Life

The SSH shall be designed to meet the performance requirements throughout a minimum lifetime of 5 years in-orbit, after completing its acceptance test, spacecraft integration and test after storage. The Door is a limited life item; it shall be designed for at least 58,400 operations/reversals, but is not intended to meet its performance requirements thereafter.

The HRM is a limited life item and shall be designed for at least 110 operations, including a maximum of 30 operations under vacuum conditions (including on-orbit). It is not intended to meet its performance requirements thereafter.

The SVA is a limited life item and shall be designed for at least 140 operations, including a maximum of 30 operations under vacuum conditions (including on-orbit). It is not intended to meet its performance requirements thereafter.

4. DESIGN VERIFICATION REQUIREMENTS

4.1 General

The SSH and SVA shall undergo a series of tests designed to demonstrate that it will function within performance specifications under the simulated conditions of ground handling, launch and orbital operation.

4.1.1 Vibration Tests

	Qualification Test Levels	Acceptance Test Levels
Sine	TBD	TBD
Random	TBD	TBD
Shock	TBD	TBD

Table 4-1 Vibration Test Levels

4.1.2 Thermal Tests

	Qualification Test Levels	Acceptance Test Levels
Thermal Vacuum	TBD	TBD

Table 4-2 Thermal Test Levels

4.1.3 EMC Tests

The SSH and SVA shall undergo EMC tests as part of the Instrument level tests.

4.1.4 Mass Properties

A mass properties test shall be carried out to determine the SSH and SVA masses. Centre of mass and mass moments of inertia shall be determined by analysis. Measurements shall be reported with the tolerances specified below.

Mass	$\pm$ 0.01 kg
Centre of Mass	$\pm$ 5 mm
Mass Moment of Inertia	$\pm$ TBD kg m^2

5. PRODUCT ASSURANCE AND SAFETY PROVISION

5.1.1 Selection of Specifications and Standards

The selection of specifications and standards for the identification, control and procurement of the commodities required to design and fabricate shall be in accordance with the requirements of AD2.

5.1.2 Parts, Materials and Processes

5.1.2.1 Parts

All parts shall be declared and listed in the Suppliers Declared Parts List and shall be selected in accordance with AD2. The list shall include the qualification status of each part and the part procurement specification which shall state the qualification and acceptance fail/pass criteria.

5.1.2.2 Materials

All materials shall be declared and listed in the Suppliers Declared Materials List. All materials shall be selected in accordance with AD2. The list shall include the qualification status of each material and the materials procurement specification which shall state the qualification and acceptance/failure criteria.

5.1.2.3 Processes

All processes shall be declared and listed in the Suppliers Declared Processes List. All processes shall be selected in accordance with AD2. The list shall include the qualification status of each process and the process specification and procedures. The specification shall state the qualification and acceptance pass/fail criteria and the minimum Quality Control required. The process procedure shall state the detailed operations required and all Quality Control operations.

5.1.3 Standard and Commercial Parts

a. All EEE parts shall be compliant with AD19, AD2 Section 5.2.2, i.e. level 2 parts (or equivalent) as defined in MIL-STD-975, NASA Standard Parts List or the GSFC Preferred Parts List (PPL). It is the responsibility of the Supplier to justify the use of non-standard parts.

b. Commercial (generic) parts shall not be used except in the Engineering Model Moving Sunshield Assembly. Non-standard parts shall be listed in the Suppliers Declared Parts List and shall satisfy the requirements of AD2.

c. Standard Hi-Rel parts shall be used wherever possible. It is the responsibility of the Supplier to justify the use of non-standard parts.

5.1.4 Moisture and Fungus Resistance

a. Parts and materials that may deteriorate when exposed to climatic and environmental conditions during storage or service usage shall be protected against such deterioration in a manner that will not prevent compliance with the specification requirements.

b. Moisture traps shall be avoided in the design.

c. Materials which are nutrients for fungi shall be avoided wherever practicable.

d. Where nutrient materials must be used outside of hermetically sealed containers, such materials shall be treated with a fungicidal agent. Qualification of a particular composition shall be determined by Test Method 508 of RD2.

e. The Assembly shall survive exposure to the moisture levels defined in Section 3.6.1.3 during the AIT Storage and Transportation period of up to 5 years without degradation of the design life defined in Section 3.7.2.

5.1.5 Corrosion Prevention and Control

5.1.5.1 Corrosion Resistance

a. The design shall include provision for corrosion prevention and control.

b. Materials used shall resist damage from moisture with particular emphasis on parts which will lose their protective coatings during the normal course of inspection, maintenance and periodic testing.

5.1.5.2 Dissimilar Metals

Contact of dissimilar metals with each other as defined in MIL-STD-889 (RD3) shall be avoided wherever possible. Protection against electrolytic corrosion which can result from such contact shall be provided by surface treatment of the metals.

5.1.5.3 Corrosive Fumes

Materials as installed in the subsystem and under the service conditions specified herein shall meet the outgassing requirements of ASTM-E595-77 (RD4).

5.1.5.4 Protective Treatment

Any materials used in the construction that may be subject to deterioration when exposed to climatic and environmental conditions likely to occur during any phase of the programme as specified in Section 3.4.2 shall be protected against such deterioration in a manner that will not prevent compliance with the relevant performance requirements. Particular attention should be

paid to earth bonding requirements where bonding is achieved through the equipment mounting feet.

5.1.5.5 Coatings and Adhesives

Coatings and adhesives shall be capable of withstanding the environmental conditions given in Section 3.6 without any degradation in performance.

5.1.5.6 Finish

The external finish applied to the Assembly shall be compatible with the mechanical, electrical and thermal requirements of the spacecraft. Where a black finish is required, black anodising should be used in preference to black paint, to minimise contamination of the instrument optics.

5.1.5.7 Protective Covers

Protective covers, including provisions for desiccant if necessary, shall be provided by the Supplier to preclude entrance of foreign particles to sensitive areas and to preclude damage during handling, storage on or off the spacecraft, assembly, integration, bench test and spacecraft test. Covers for all connectors shall be provided. Covers required during spacecraft ground operations shall be fastened in a manner suitable to prevent loss during transportation and handling of the spacecraft with any axis down. Such items shall be colour coded in a red finish and labelled accordingly.

5.1.6 Interchangeability and Replaceability

a. Each Assembly shall be directly interchangeable in form, fit and function with other Assemblies of the same configuration.

b. The performance characteristics and dimensions of like Assemblies shall be sufficiently uniform to permit equipment interchange with a minimum of adjustment.

5.1.7 Workmanship

Workmanship requirements for fabrication shall comply with the Suppliers controlled manufacturing and process standards, procedures and specifications as identified in AD2.

5.1.8 Identification and Marking

a. Each item of equipment furnished under this specification shall be marked for identification in accordance with FED-STD-123 (RD5), except that the marking shall be placed directly on the exterior surface of the equipment casing by stencilling, silk screening or an equivalent process.

b. All materials used for product marking shall be in accordance with the requirements of Section 3.5.6. Marking shall include the following data:

i. Equipment Designation, TBD

ii. Manufacturer's Identification

iii. Top Assembly Drawing Number and Issue

iv. Serial Number

v. Contract Number

vi. Connector Designations

5.2 Safety Provisions

a. Connectors

i. Connectors shall be marked or coded to prevent wrong mating.

ii. Connector shells shall have guides to ensure that pin alignment is positive and that no temporary or permanent unintentional connection can be made while mating.

iii. Where live equipment could be left unmated, male contacts grouped without individual insulation shall be unpowered if possible.

iv. Connectors shall provide strain relief for wires and cables.

v. Mate/Demate logs shall be maintained.

b. Thermally Induced Hazards

i. Electronic parts and leads shall be configured to ensure that they are not put under excess strain as a result of thermal expansion and contraction.

ii. Personnel warning labels concerning potentially hot surfaces shall be provided as in Section 3.4.6.2.

5.2.1.1 Fire (Flammability) Control

a. The design shall be such that, under any normal or fault conditions arising from operation in an air environment, no individual element shall be capable of reaching the ignition temperature of that element or that of any material with which it is in direct contact.

b. In the particular case of current-carrying conductors:

i. The maximum current that can be supplied to the conductor shall be taken into account.

ii. The effect of bunching of wires in cableforms is to be taken into account, at least in respect of both the tendency to reach a high temperature therein, and the close proximity of other elements.

5.2.1.2 Critical Pressure

The Assembly shall be designed to ensure that no arcing occurs under critical pressure conditions when the equipment is switched on and operating.

5.3 Documentation

Documentation used in the design, manufacture and test shall conform with the configuration control requirements defined in AD3.

5.4 Logistics

5.4.1 Maintenance

The Assembly shall not require any maintenance to meet the requirements of this specification.

5.4.2 Spares

Spares identified in AD16 shall be fabricated and tested in the same manner as those configured into the deliverable assemblies.

6. QUALITY ASSURANCE PROVISIONS

6.1 General Requirements

The SSH and SVA shall be assembled, integrated and tested using defined standards, methods and procedures. Testing shall be performed as part of the Instrument Assembly to requirements defined below and in AD13.

The Assemblies shall meet all the conditions, examinations and tests specified in this section in order to attain:-

a. Design confidence by development tests.

b. Qualification of equipment design.

c. Acceptance of the flight equipment.

6.1.1 Assembly and Test Policy

6.1.1.1 Classification of Tests

Tests, inspections, analyses and demonstrations shall be performed to verify that the requirements of Section 3 have been met by the Assemblies. These tests shall be performed to verify that the quality of workmanship conforms to the standard required for the lifetime of the spacecraft.

6.1.2 Supplier (MMS) Responsibilities

The supplier shall be responsible for all SSH and SVA Assembly testing, except where explicitly stated.

6.1.3 Customer Responsibilities

The Customer shall have the right to witness all tests and to be represented on Material Review Boards, Test Review Boards and Failure Review Boards.

6.1.4 Assembly, Integration and Test Facilities

All AIT activities shall take place in clean conditions in accordance with Section 3.6.

All test facilities shall be tested and qualified for use on the programme before the start of the test programme. Measurements shall be made to establish the precise nature of the test equipment performance and that the required test conditions can be accurately reproduced.

Test equipment check-out shall take place before the start of any test sequence to give assurance that all equipment is adequately calibrated and that all test levels to be applied to the equipment can

be achieved within the specified test parameters thus ensuring the safety of the hardware under test.

The qualification and acceptance testing of equipment other than Customer furnished equipment shall be carried out at the Supplier's own establishment or at approved test laboratories.

6.2 Verification of Performance and Design Requirements

6.2.1 Verification of Design Qualification

Verification of the SSH and SVA design qualification shall be achieved by analysis, inspections, demonstrations and tests. Each requirement of Section 3 shall be verified as defined in the verification matrix of Table 6-1 and in accordance with the following requirements.

Analyses The design requirements identified in Table 6-1 as 'A' shall be verified by analysis, including analysis of qualification test results of similar equipment flown on previous programmes, if applicable.

Inspections The design requirements identified in Table 6-1 as 'I' shall be verified by inspection of the test article.

Demonstrations The design requirements identified in Table 6-1 as 'D' shall be verified by demonstration.

Tests The design requirements identified in Table 6-1 as 'T' shall be verified by tests carried out on the test article.

6.2.2 Failure Criteria

The following shall constitute a test failure and shall be processed in accordance with PA Plan (AD2).

a. Failure of the item to meet a specified requirement.

b. Failure of the test equipment to produce a specified stimulus.

6.2.3 Rejection and Retest

If a failure, malfunction, or out-of-tolerance performance occurs during or after the test, the tests shall be discontinued. Further action shall be according to the disposition of the Failure Review Boards. If corrective action substantially affects the significance of results of previously completed tests of the sequence, such tests shall also be repeated. A complete record shall be made of failures and corrective actions taken. All corrective actions and retests shall be conducted within the established Non-Conformance Procedure detailed in the PA Plan (AD2).

DESIGN VERIFICATION MATRIX

KEY
I Inspection
A Analysis
D Demonstration
T Test

Sect No.	Requirement	ENGINEERING: OVERALL INSTRUMENT	ENGINEERING: SYSTEM	ENGINEERING: SUBSYSTEM/ASSEMBLY	ENGINEERING: COMPONENT	ENGINEERING: SPARE	ENGINEERING: SPARE	ENGINEERING: SPARE	FLIGHT: OVERALL INSTRUMENT	FLIGHT: SYSTEM	FLIGHT: SUBSYSTEM/ASSEMBLY	FLIGHT: COMPONENT	FLIGHT: SPARE	FLIGHT: SPARE	FLIGHT: SPARE	FLIGHT: SPARE
3.	REQUIREMENTS															
3.1	SSH Assembly															
3.1.1	SSH General Description								D/T					D/T		
3.1.2	SSH Performance															
3.1.2.1	Door Size and Construction															
3.1.2.2	Hinge Position									I					I	
3.1.2.3	Door Angle and Opening/Closing times									T					T	
3.1.2.4	Door Positional Resolution									A					A	
3.1.2.5	Knowledge of Door Position								T	T				T	T	
3.1.2.6	Torque Disturbances									A					A	
3.1.2.7	Uncompensated Momentum									A					A	
3.1.2.8	Hold-down and Release Mechanism									I/T					I/T	
3.1.2.9	Modes of Operation															
3.1.2.10	Sealing									A					A	
3.1.2.11	Sun Sensors									I/T					I/T	
3.1.2.12	Loom									I					I	
3.1.2.13	Aperture Plate									I					I	
3.2	SVA Assembly															
3.2.1	SVA General Description								D/T					D/T		
3.2.2	SVA Performance															
3.2.2.1	Cover									I					I	
3.2.2.2	Actuator									I					I	
3.2.2.2.1	Number of Operating Cycles									T					T	
3.2.2.3	Cover Opening Time									T					T	
3.2.2.4	Torque Disturbances									A					A	
3.2.2.5	Uncompensated Momentum									A					A	
3.2.2.6	Outer Baffle									I					I	
3.2.2.7	Seal									A					A	
3.2.2.8	Shield Status Sensors									T					T	
3.2.2.9	Loom									I/T					I/T	
3.2.2.10	Albedo Shield									I					I	
3.3	Electrical Requirements															
3.3.1	Electrical Interfaces									I/T					I/T	
3.3.2	Supply Voltage									I/T					I/T	
3.3.3	Power Consumption									T					T	
3.3.4	Status Sensors									T					T	
3.3.5	Connectors									I					I	
3.3.6	Grounding									I/T					I/T	
3.3.7	Electromagnetic Compatibility (TBC)								T							
3.3.7.1	General								I							
3.3.7.2	Electro-Explosive Devices (EED's)								I							
3.3.8	Electrostatic Discharge								T							

Table 6-1 Verification Matrix

DESIGN VERIFICATION MATRIX

KEY
I Inspection
A Analysis
D Demonstration
T Test

Sect No.	Requirement	METHOD OF VERIFICATION																			
		OVERALL INSTRUMENT	SYSTEM	SUBSYSTEM/ASSEMBLY	COMPONENT	SPARE	SPARE	SPARE	ENGINEERING	OVERALL INSTRUMENT	SYSTEM	SUBSYSTEM/ASSEMBLY	COMPONENT	SPARE	SPARE	SPARE	SPARE	SPARE	SPARE	SPARE	FLIGHT
3.4	Mechanical Requirements																				
3.4.1	Mechanical Design									A						A					
3.4.1.1	General									I						I					
3.4.2	Mechanical Interfaces									I	I					I	I				
3.4.3	Strength Requirements									A						A					
3.4.3.1	Quasi-Static Design Load Factor (TBC)									A						A					
3.4.3.2	Test Loads									A						A					
3.4.3.3	Margins of Safety									A						A					
3.4.3.4	On-Orbit Loads									A						A					
3.4.3.5	Load Distribution									A						A					
3.4.3.6	Material Properties and Allowables									A						A					
3.4.4	Stiffness Requirements									A						A					
3.4.5	Fatigue									A						A					
3.4.6	Thermal Stresses									A						A					
3.4.7	Torque Margin									A						A					
3.4.8	Contamination									A						A					
3.4.9	Lubrication									A						A					
3.4.10	Envelope									I						I					
3.4.11	Mass Properties									T						T					
3.4.12	Ground Operation									A						A					
3.5	Thermal Requirements																				
3.5.1	Thermal Design Margins									A						A					
3.5.2	Thermal Control Techniques									A						A					
3.5.3	Thermal Design Techniques									A						A					
3.5.4	Thermal Dissipation									A						A					
3.5.5	Control of Thermal Finishes									I						I					
3.6	Environmental Conditions																				
3.6.1	Ground Operation Environment									A						A					
3.6.2	Launch/Ascent Phase									A						A					
3.6.3	Orbit Phase									A						A					
3.6.4	Nominal Mission									A						A					
3.6.5	Storage									A						A					
3.7	Reliability									A						A					
3.7.1	Single Point Failure									A						A					
3.7.2	Operational Life									A/T						A/T					
4.	DESIGN VERIFICATION REQUIREMENTS																				
4.1	General																				
4.1.1	Vibration Tests								T	T					T		T				
4.1.2	Thermal Tests								T	T					T		T				
4.1.3	EMC Tests								T						T						
4.1.4	Mass Properties									T						T					

Table 6-1 Verification Matrix

DESIGN VERIFICATION MATRIX

KEY
I Inspection
A Analysis
D Demonstration
T Test

Sect No.	Requirement	ENGINEERING: OVERALL INSTRUMENT	ENGINEERING: SYSTEM	ENGINEERING: SUBSYSTEM/ASSEMBLY	ENGINEERING: COMPONENT	ENGINEERING: SPARE	ENGINEERING: SPARE	ENGINEERING: SPARE	FLIGHT: OVERALL INSTRUMENT	FLIGHT: SYSTEM	FLIGHT: SUBSYSTEM/ASSEMBLY	FLIGHT: COMPONENT	FLIGHT: SPARE	FLIGHT: SPARE	FLIGHT: SPARE
5.	PRODUCT ASSURANCE AND SAFETY PROVISION														
5.1.1	Selection of Specifications and Standards								A			A			
5.1.2	Parts, Materials and Processes								D	D		D	D		
5.1.3	Standard and Commercial Parts								I	I		I	I		
5.1.4	Moisture and Fungus Resistance								A	A		A	A		
5.1.5	Corrosion Prevention and Control								A	A		A	A		
5.1.6	Interchangeability and Replaceability								I	I		I	I		
5.1.7	Workmanship								I	I		I	I		
5.1.8	Identification and Marking								I	I		I	I		
5.2	Safety Provisions								A	A		A	A		
5.3	Documentation								I	I		I	I		
5.4	Logistics								A	A		A	A		
5.4.1	Maintenance								I/T	I/T		I/T	I/T		
5.4.2	Spares								I	I		I	I		

Table 6-1 Verification Matrix

7. PACKAGING AND SHIPPING

7.1 Cleaning

The Assemblies shall be cleaned in accordance with the Contamination Control Plan (AD4).

7.2 Preservation and Unit Packaging

The Assemblies shall be preserved and packaged in accordance with AD4.

All electrical connectors shall be closed with suitable caps or plugs.

Extreme care shall be taken to avoid damage to the mounting surface of the equipment and other vulnerable parts of the equipment.

The Assemblies shall be packed when in the stowed configuration.

7.3 Packaging Design Requirements

The assemblies, preserved and packaged as specified in Section 5.1, shall be packed in a rigid container with suitable blocking, bracing and cushioning to adequately support and protect the equipment.

7.4 Special Handling, Loading Techniques and Devices

TBD.

7.5 Marking for Shipping

The outer container shall have labels on at least two different sides with the following information:

a. Consignee establishment name and address.

b. Attention of: followed by name of person.

c. Unit identification/title.

d. Gross weight and nett weight in kilograms or pounds.

e. Size of container in centimetres or inches.

f. Contract number.

g. Consignor name and address.

h. FRAGILE in red.

CHANGE RECORD

CHANGE NUMBER	CLASS	CHANGE DETAILS	ISSUE
EO 3164-0023	-	First Issue	A
EO 3164-0035	II	Update	B
EO 3164-	II	Complete re-write of document	C
EO	II	Update	D
CR359	II	Change SVA Life Cycles	E

DISTRIBUTION LIST

INTERNAL	EXTERNAL
I K Stewart M Humphries T J Forward	N Morris (RAL)