SP-HIR-212B

HIRDLS

HIGH RESOLUTION DYNAMICS LIMB SOUNDER

Originator: Lucy Lanham **Date**: 10 April 2000

Subject / Title: STH to SSH Interface Control Document (ICD)

Contents / Description / Summary:

This document defines the interface between the HIRDLS Structural/Thermal Hardware Subsystem (STH) and the Sun Shield/Space View Port Assembly Subsystem (SSH).

Information included herein is controlled under the International Traffic in Arms Regulations (ITAR) by the U. S. Department of State. Transfer of this information to a foreign person or foreign entity requires an export license issued by the U.S. State Department or an ITAR exemption to the license requirements prior to the export or transfer.

Keywords: STH, SSH, interface

Purpose (20 characters maximum): Interface definition

Oxford University
Atmospheric, Oceanic & Planetary Physics
Parks Road
Oxford OX1 3PU
United Kingdom

University of Colorado at Boulder
Center for Limb Atmospheric Sounding
3300 Mitchell Lane, Suite 250
Boulder, Colorado 80301-2296
United States of America

Advanced Technology Center
Lockheed Martin Space Systems
Missiles & Space Operations
3251 Hanover Street
Palo Alto, CA 94304-1191
United States of America

EOS

[Intentionally Blank]

SP-HIR-212

STH to SSH Interface Control Document (ICD)

Approved by: _____

John G. Whitney, HIRDLS Program System Engineer Date

_____

Raymond L. von Savoye, HIRDLS Instrument System Engineer Date

_____

Nigel Moris, UK Programme Manager Date

Log of Changes

Rev.	Date	Section	Change Description
	98-10-06		Initial Release
A	99-02-01	3.1.1	FIG4 – Added “Finish w/ emissivity >0.9 (matte black) required on inner (-Y) side of SVA cover”
B	00-03-28	Sig. Page	Updated to reflect current program responsibilities
		2.1	Added current release dates
		2.2	Removed Mass Report from list of Information Documents
		3.1.1	Added Figures 7 & 8 to list of figures
		3.1.2	Changed reference to SVA mounting to Figure 8.
		3.1.4	Referred Mass Properties requirements to the ITS and SSDs
		3.2	Removed subsection heading. Changed to Electrical Grounding and Bonding. Changed reference for grounding strap location to Figure 6 Provided specific information on SVA grounding Added bonding requirement
		3.3	Added reference to section 3.4 of the Thermal Interface Requirements Document
		Figure 1	Removed notes 4 & 5 on COM
		Figure 2	Changed title block to reflect 8 drawings
		Figure 3	Changed title block to reflect 8 drawings
		Figure 4	Removed notes 4 and 5
		Figure 5	Changed “SVA Outline” to “SVA Ground Plane” and provided correct depiction of ground plane
		Figure 6	Changed title block to reflect 8 drawings
		Figure 7	Added Figure 7, a depiction of the SVA spacer plate
		Figure 8	Added Figure 8 to depict SVA mounting to STH

TABLE OF CONTENTS

1.0 SCOPE **1**

2.0 DOCUMENT REFERENCES **1**

2.1 Applicable Documents **1**

2.2 Information Documents **1**

3.0 INTERFACE REQUIREMENTS **3**

3.1 Mechanical **3**
3.1.1 Drawings 3
3.1.2 Mounting 3
3.1.3 Alignment & Reference Coordinate Frames 3
3.1.4 Mass Properties 3
3.1.5 Venting 3

3.2 Electrical **3**

3.3 Thermal **4**

[Intentionally Blank]

1.0 Scope

This Interface Control Document (ICD) defines the specific design implementation of the Mechanical, Electrical, and Thermal Conductive interfaces between the Structure/Thermal Subsystem (STH) and the Sunshield Subsystem (SSH). The interfaces between these two subsystems are limited to Mechanical, and Thermal (conductive) between the Aperture Plate/Door Assembly, and Space View Aperture Assembly (SVA) and the STH, and electrical grounding.

2.0 Document References

2.1 Applicable Documents

The documents listed below are a part of this ICD to the extent specified herein. In the case of a conflict between the contents of this ICD and any Applicable Document, this ICD shall take precedence.

GSFC 424-28-21-13	Instrument Technical Specification (ITS)	00-02
SP-HIR-200G	IICD System Section	97-12-01
SP-HIR-111	Thermal Interface Requirements	99-05-08

2.2 Information Documents

The documents listed below are for information only and are explicitly not, by reference, part of this ICD.

SP-HIR-031	STH Specification Document	Current Revision
SP-HIR-050	Sunshield Subsystem Specification Document	Current Revision

[Intentionally Blank]

3.0 Interface Requirements

3.1 Mechanical

The mechanical interface is defined in the drawings listed below:

3.1.1 Drawings

Aperture Plate and Door	SP-HIR-212-Figure 1
Aperture Plate and Door Views	SP-HIR-212- Figure 2
Aperture Plate and Door Views	SP-HIR-212- Figure 3
Space View Aperture (SVA)	SP-HIR-212- Figure 4
SVA & SSH I/F to STH	SP-HIR-212- Figure 5
SSH LRCF Co-ordinates	SP-HIR-212- Figure 6
SVA Spacer Plate	SP-HIR-212- Figure 7
SVA Mounting to STH	SP-HIR-212- Figure 8

3.1.2 Mounting

Subsystem mounting interface is shown in Figures 1, 3, and 8.

3.1.3 Alignment & Reference Coordinate Frames

SSH and SVA axes A1, A2, A3 are shown in Figure 5

3.1.4 Mass Properties

The mass properties of the subsystems are specified in the ITS, SP-HIR-013U, paragraph 5.1 and the associated Subsystem Specification Documents, SP-HIR-031 and SP-HIR-050.

3.1.5 Venting

Venting of the aperture plate is via ∅2 holes along the +Y, +Z and -Z panel edges.

3.2 Electrical Grounding and Bonding

IRCF location of SSH/STH grounding stud is shown on Figure 6. This point is positioned coincident with the grounding strap interface as shown in Figure 6. Grounding of the Aperture plate and Hinge/Motor assemblies will be via this stud and also through the SSH Harness earth line to external connectors J211 and J212. Grounding of the HRM is via the Titanium support brackets to the STH and the harness earth line.

The SVA is grounded through its base plate, through the SVA spacer plate, to conductive foil mounted on the STH +Y panel as illustrated in Figure 5.

The dc resistance across each bond joint shall be less than 2.5mΩ.

3.3 Thermal

The thermal interfaces are defined in the Thermal Interfaces Requirements Document, SP-HIR-111 in paragraph 3.1.

REVISIONS				
ZONE	REV	DESCRIPTION	DATE	APVD
	B	UPDATED TO LMMS TITLEBLK, REMOVED NOTES 3 & 4.	01-29-00	

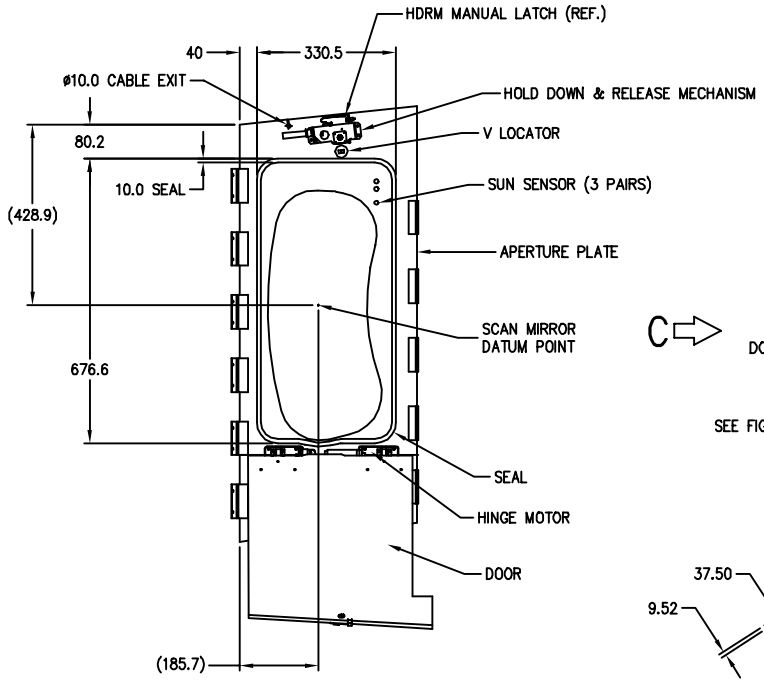

TRUE VIEW ON ARROW C

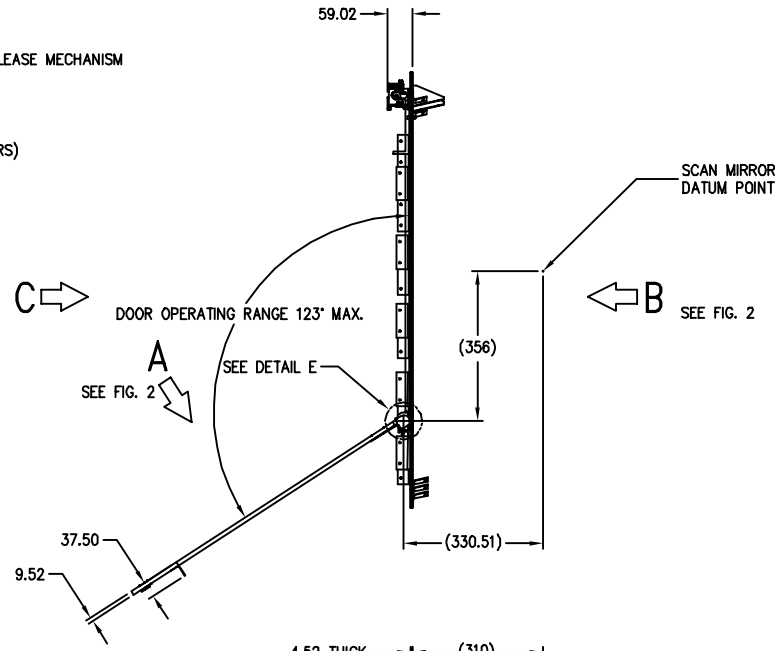

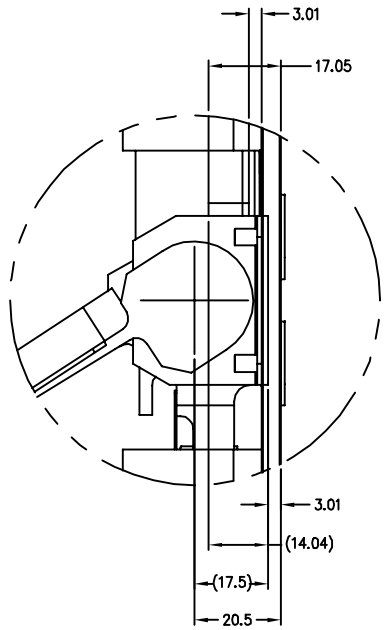

DETAIL E

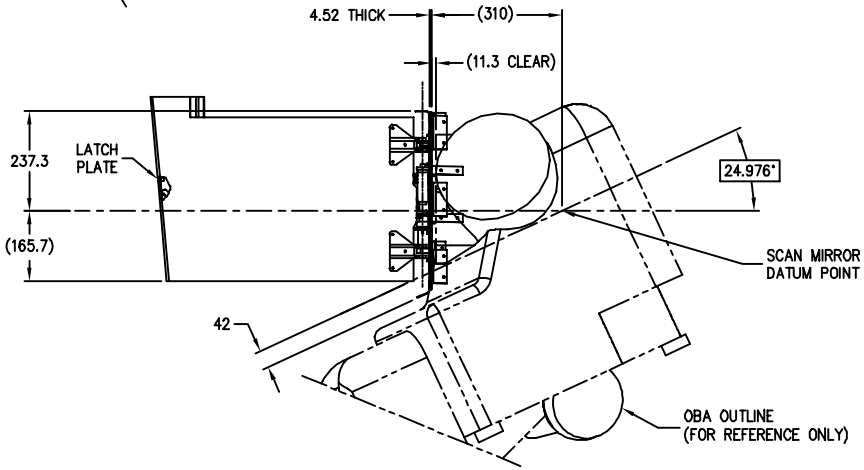

TRUE VIEW ON ARROWS D–D
(SEE FIG. 3)

NOTES:

1. DIMENSIONS ARE IN mm UNLESS OTHERWISE STATED
2. TOLERANCES ARE: LRCF TO IRCF ±0.5, FIXING HOLES ±0.1, UNLESS STATED
3. REMOVED NOTE
4. REMOVED NOTE

LOCKHEED MARTIN Missiles & Space
Advanced Technology Center Palo Alto, CA

TITLE
STH/SSH INTERFACE
APERTURE PLATE & DOOR

SIZE	FIG NO.	REV.
B	SP-HIR-212-FIG1	B

SCALE NONE | 99-02-01 | PAGE 1 OF 8

REVISIONS				
ZONE	REV	DESCRIPTION	DATE	APVD
	B	UPDATED TO LMMS TITLEBLK.	01-29-00	

TABLE 1
SUN SENSOR POSITION DATA

IDENT	*DESCRIPTION*	*IRCF POSITION*
C1	SUN SENSOR 1	1355.16, 1039.35, 1056.22
C2	SUN SENSOR 2	1350.80, 1021.88, 1056.22
C3	SUN SENSOR 3	1342.92, 990.27, 1056.22

TABLE 2
HOLE / INSERT DATA

IDENT	*DESCRIPTION*	*QTY*
A	REF. POINTS	6
B	ISO M4 STUDS	8
C	⌀A 10	3
D1–4	⌀A 4,3 / 4,4	4
D5	⌀A 31,0	1
D6,7	⌀A 10,0	2
E	⌀A 4,3/4,4	36

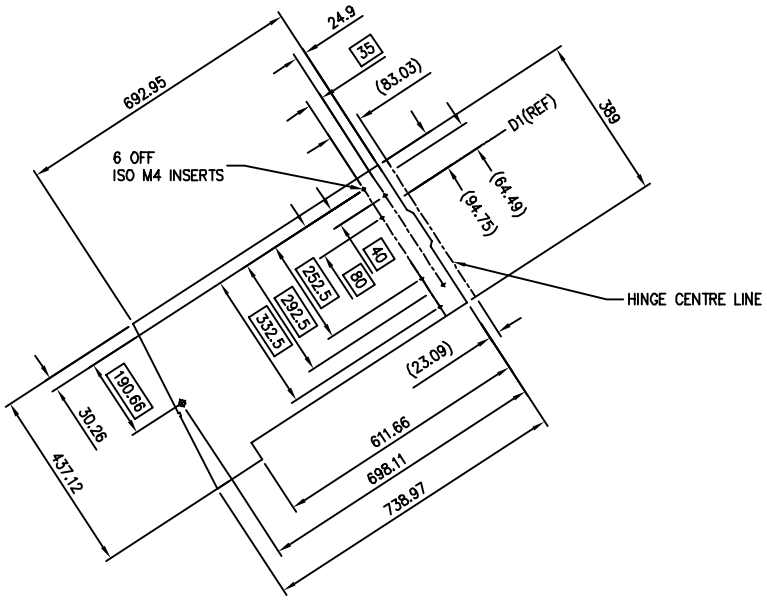

VIEW OF DOOR
ON ARROW A (FIG. 1)

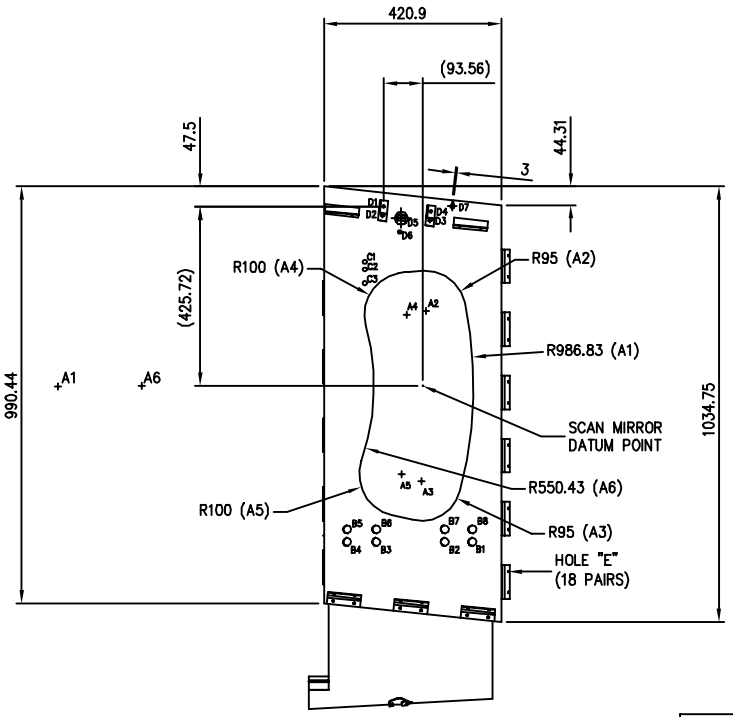

VIEW OF APERTURE PLATE
ON ARROW B (FIG 1)

NOTES:

1. DIMENSIONS ARE IN mm UNLESS OTHERWISE STATED
2. TOLERANCES ARE: IRCF TO LRCF ±0.5; FIXING HOLES ±0.1, UNLESS STATED
3. STRUCTURE CONSTRUCTION – CFRP SKINNED ALUMINIUM HONEYCOMB PANELS
4. COMPONENT MOUNTING INTERFACE:
   HINGE/APERTURE PLATE INTERFACE – ISO M4 ST. STEEL STUDS
   HINGE/DOOR LATCH INTERFACE – ISO M4 THREADED INSERTS
   LATCH INTERFACE – ISO M4 THREADED BRACKET

LOCKHEED MARTIN
Missiles & Space
Advanced Technology Center Palo Alto, CA

TITLE
STH/SSH INTERFACE
APERTURE PLATE & DOOR VIEWS

SIZE	FIG NO.	REV.
B	SP–HIR–212–FIG2	B

SCALE NONE | 99-02-01 | PAGE 2 OF 8

REVISIONS				
ZONE	REV	DESCRIPTION	DATE	APVD
	B	UPDATED TO LMMS TITLEBLK.	01-29-00	

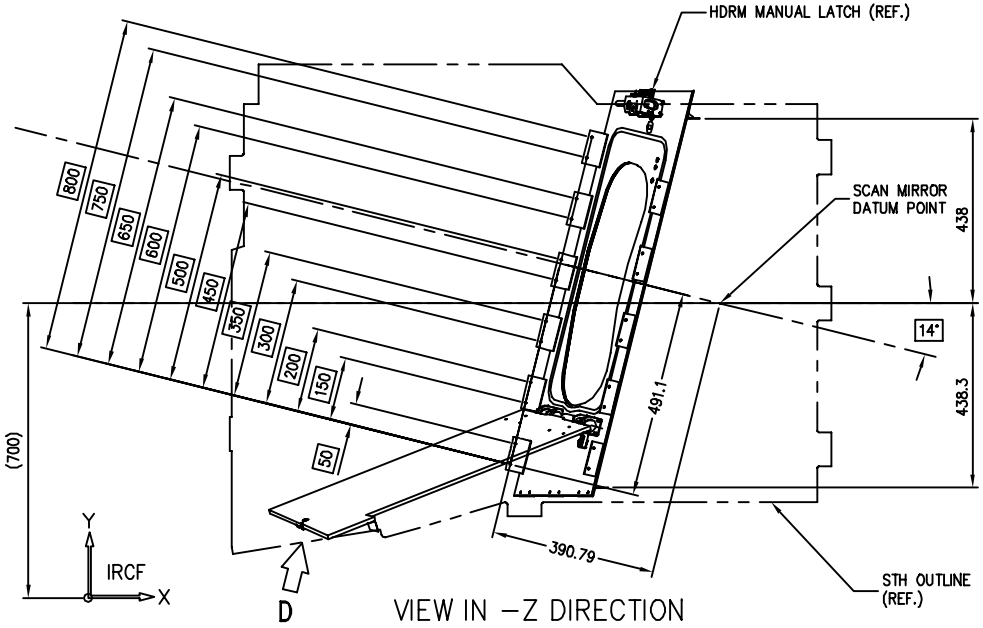

VIEW IN −Z DIRECTION

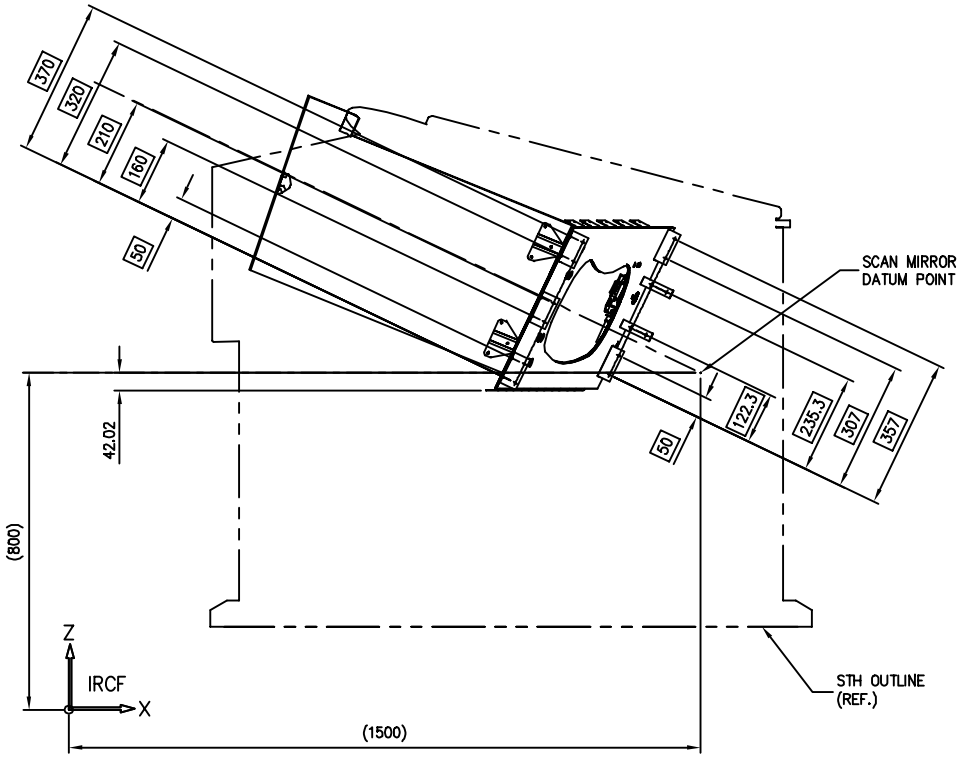

VIEW IN +Y DIRECTION

NOTES:

1. DIMENSIONS ARE IN mm UNLESS OTHERWISE STATED
2. TOLERANCES ARE: IRCF TO LRCF ±0.5; FIXING HOLES ±0.1, UNLESS STATED

LOCKHEED MARTIN Missiles & Space
Advanced Technology Center Palo Alto, CA

TITLE
STH/SSH INTERFACE
APERTURE PLATE & DOOR VIEWS

SIZE	FIG NO.	REV.
B	SP-HIR-212-FIG3	B

SCALE NONE | 99-02-01 | PAGE 3 OF 8

REVISIONS				
ZONE	REV	DESCRIPTION	DATE	APVD
	B	REMOVED NOTES 3 & 4, UPDATED TO LMMS TITLEBLK.	01-29-00	

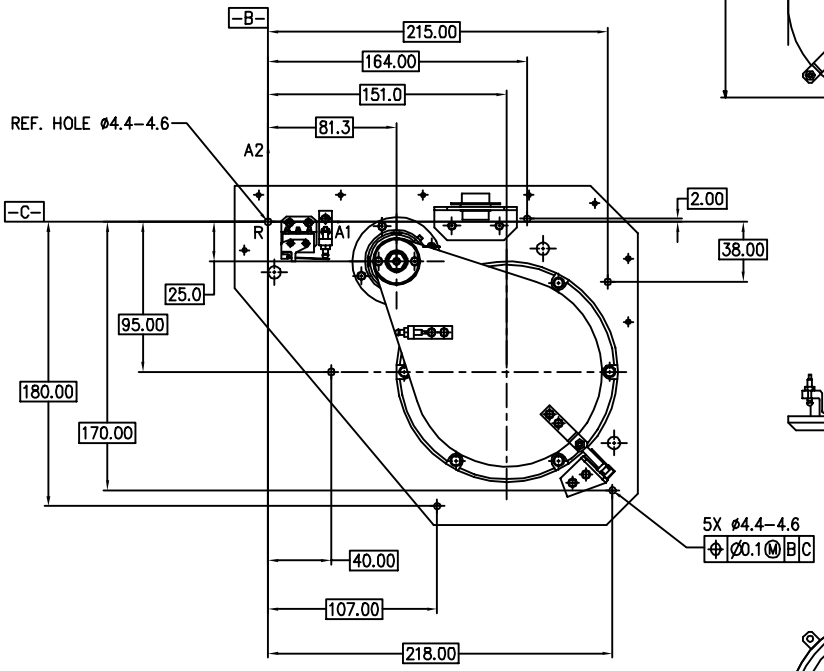

SVA ASSEMBLY (COVER IN CLOSED POSITION)
ALBEDO SHIELD AND ALBEDO SHIELD MOUNTING BRACKET OMITTED

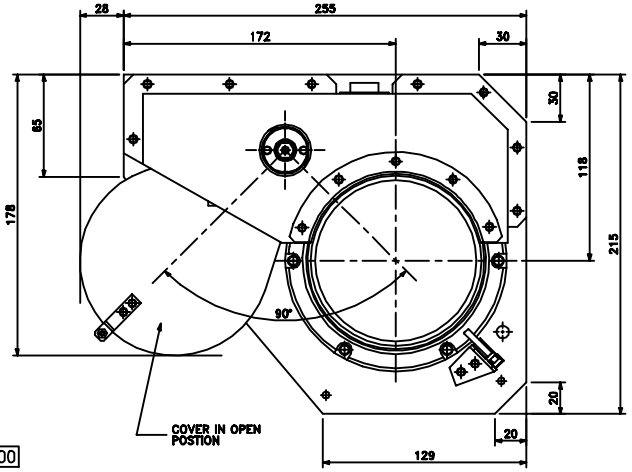

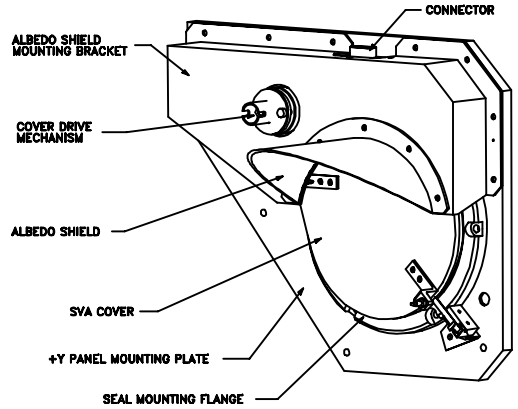

ISOMETRIC VIEW

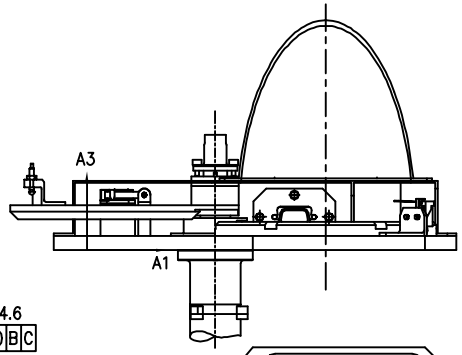

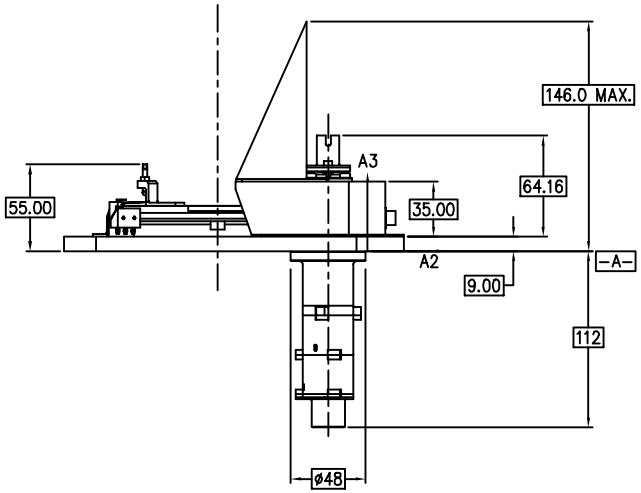

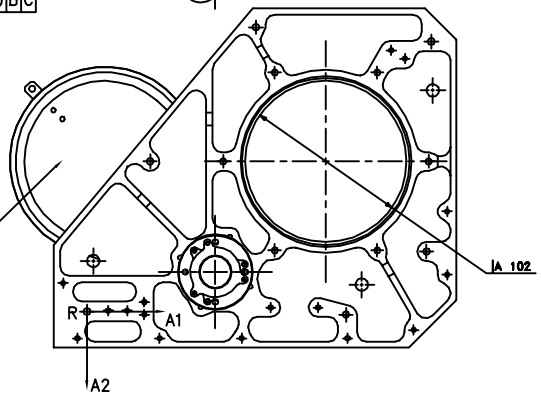

FINISH W/ EMISSIVITY > 0.9 (MATTE BLACK)
REQUIRED ON INNER (-Y) SIDE OF SVA COVER

NOTES:

1. DIMENSIONS ARE IN mm UNLESS OTHERWISE STATED
2. TOLERANCES ARE ±0.5 UNLESS STATED
3. REMOVED
4. REMOVED

LOCKHEED MARTIN
Missiles & Space
Advanced Technology Center Palo Alto, CA

TITLE
STH/SSH INTERFACE
SPACE VIEW APERTURE (SVA)

SIZE	FIG NO.	REV.
B	SP-HIR-212-FIG4	B

SCALE NONE | 99-20-01 | PAGE 4 OF 8

REVISIONS				
ZONE	REV	DESCRIPTION	DATE	APVD
	B	ADDED SVA GND PLANE & UPDATED TO LMMS TITLEBLK.	01-29-00	

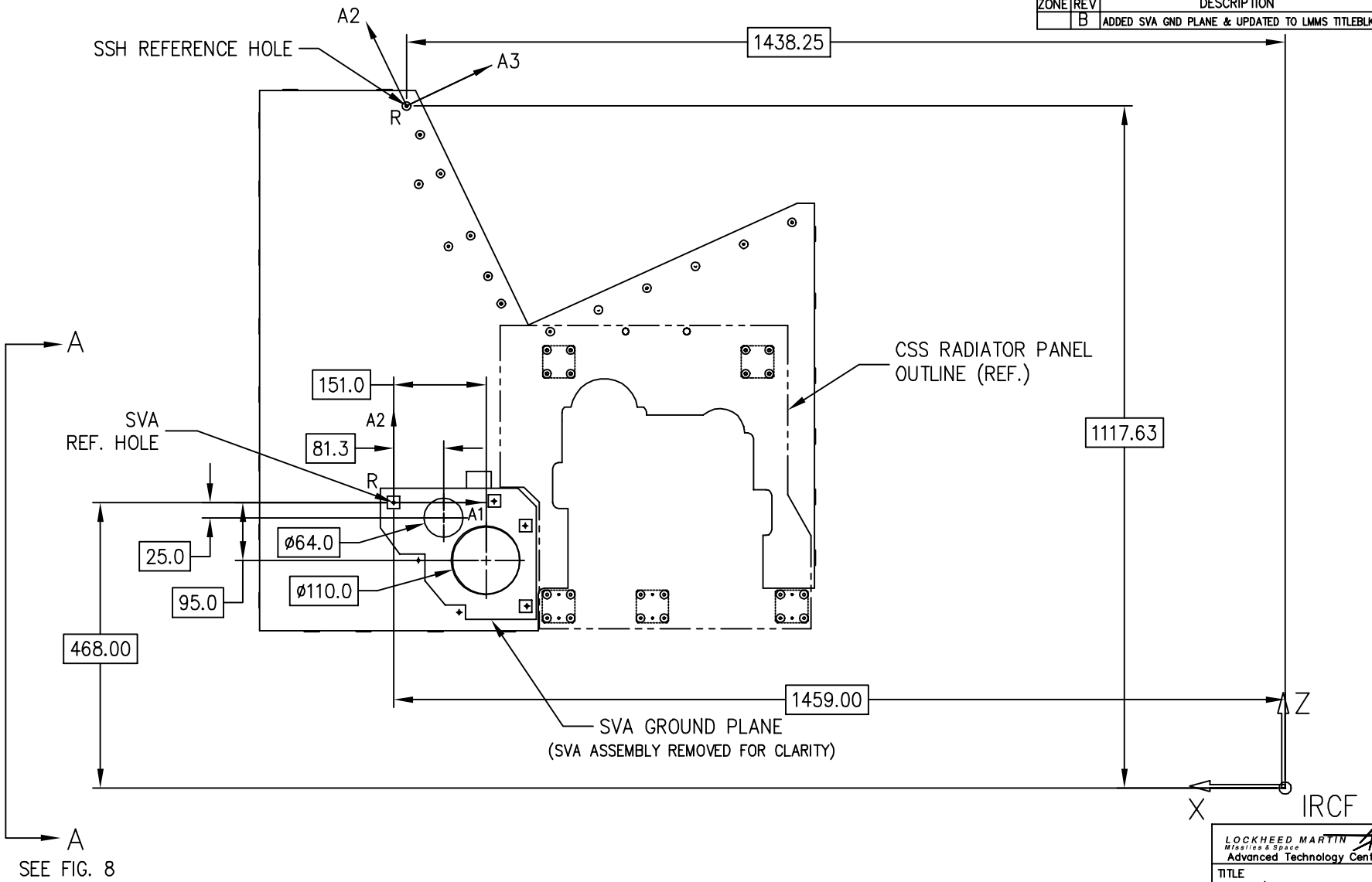

NOTES:

1. DIMENSIONS ARE IN mm UNLESS OTHERWISE STATED
2. TOLERANCES ARE ±0.5 UNLESS STATED

LOCKHEED MARTIN
Missiles & Space
Advanced Technology Center Palo Alto, CA

TITLE
STH/SSH INTERFACE
SVA & SSH I/F TO STH

SIZE	FIG NO.	REV.
B	SP-HIR-212-FIG5	B

SCALE NONE | 99-02-01 | PAGE 5 OF 8

REVISIONS				
ZONE	REV	DESCRIPTION	DATE	APVD
	B	UPDATED TO LMMS TITLEBLK.	01-29-00	

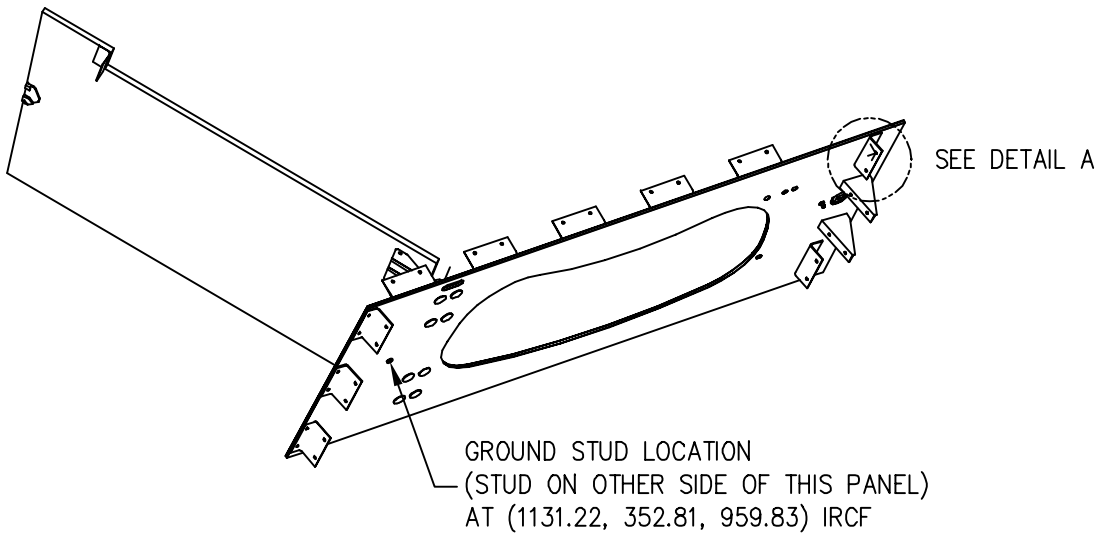

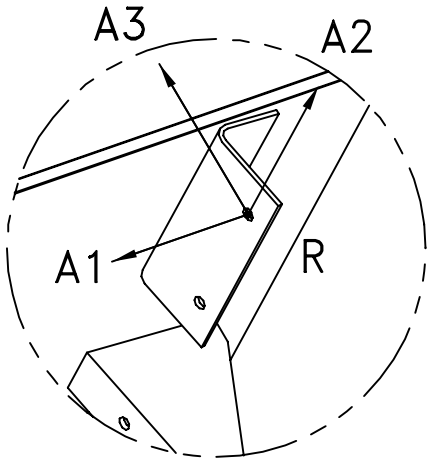

DETAIL A

NOTES:

1. DIMENSIONS ARE IN mm UNLESS OTHERWISE STATED
2. TOLERANCES ARE ±0.5 UNLESS STATED
3. A1/A2 PLANE IS IN THE PLANE OF THE APERTURE PLATE, WHERE A1 IS PARALLEL TO THE TOP EDGE OF THE PLATE.

LOCKHEED MARTIN
Missiles & Space
Advanced Technology Center Palo Alto, CA

TITLE
STH/SSH INTERFACE
SSH LRCF COORDINATES

SIZE	FIG NO.	REV.
B	SP-HIR-212-FIG6	B

SCALE NONE | 99-02-01 | PAGE 6 OF 8

REVISIONS				
ZONE	REV	DESCRIPTION	DATE	APVD
	B	ADDED FIGURE 7, REMOVED NOTE 1	01-29-00	

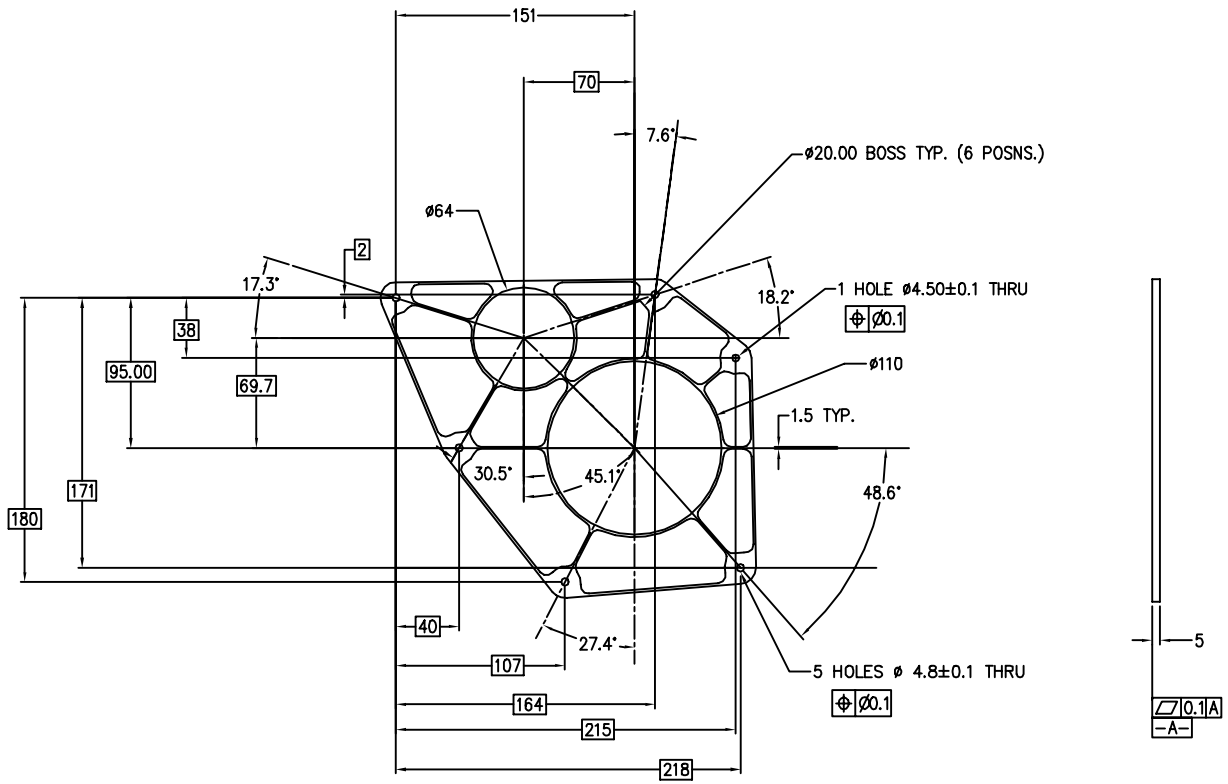

NOTES:

1. REMOVED
2. WEB WALL THICKNESS TO BE 1.5.
3. ALL FILLET REDII TO BE 5.0.

LOCKHEED MARTIN
Missiles & Space
Advanced Technology Center Palo Alto, CA

TITLE
SPACER PLATE, SVA

SIZE	FIG NO.	REV.
B	SP-HIR-212-FIG7	B

SCALE NONE | 01-29-00 | PAGE 7 OF 8

REVISIONS				
ZONE	REV	DESCRIPTION	DATE	APVD

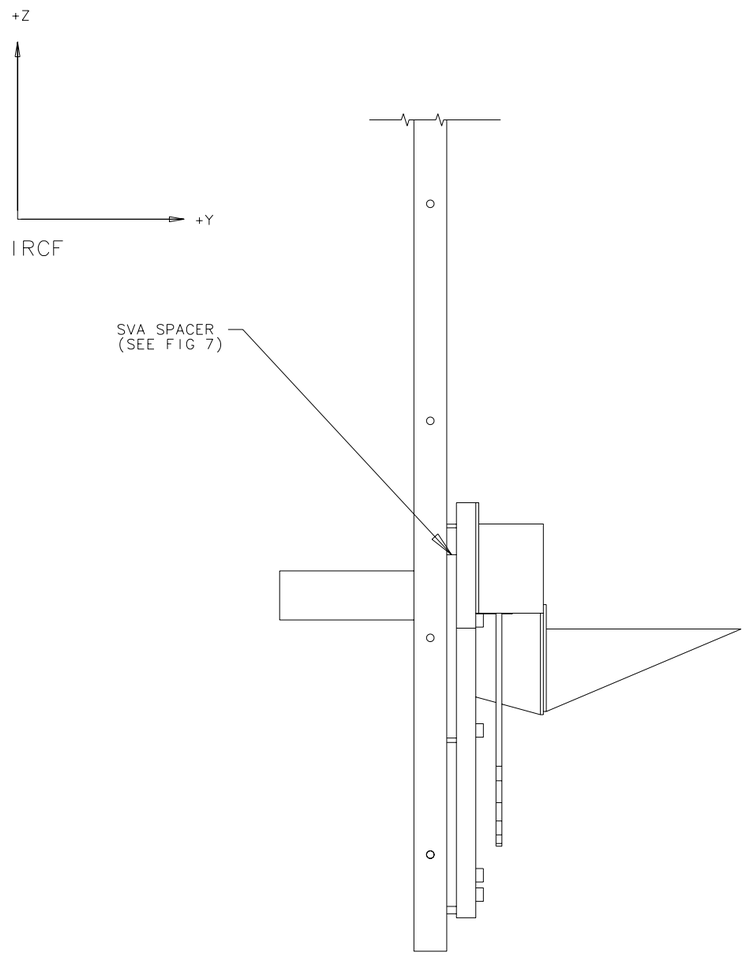

VIEW F-F

SCALE 1/1

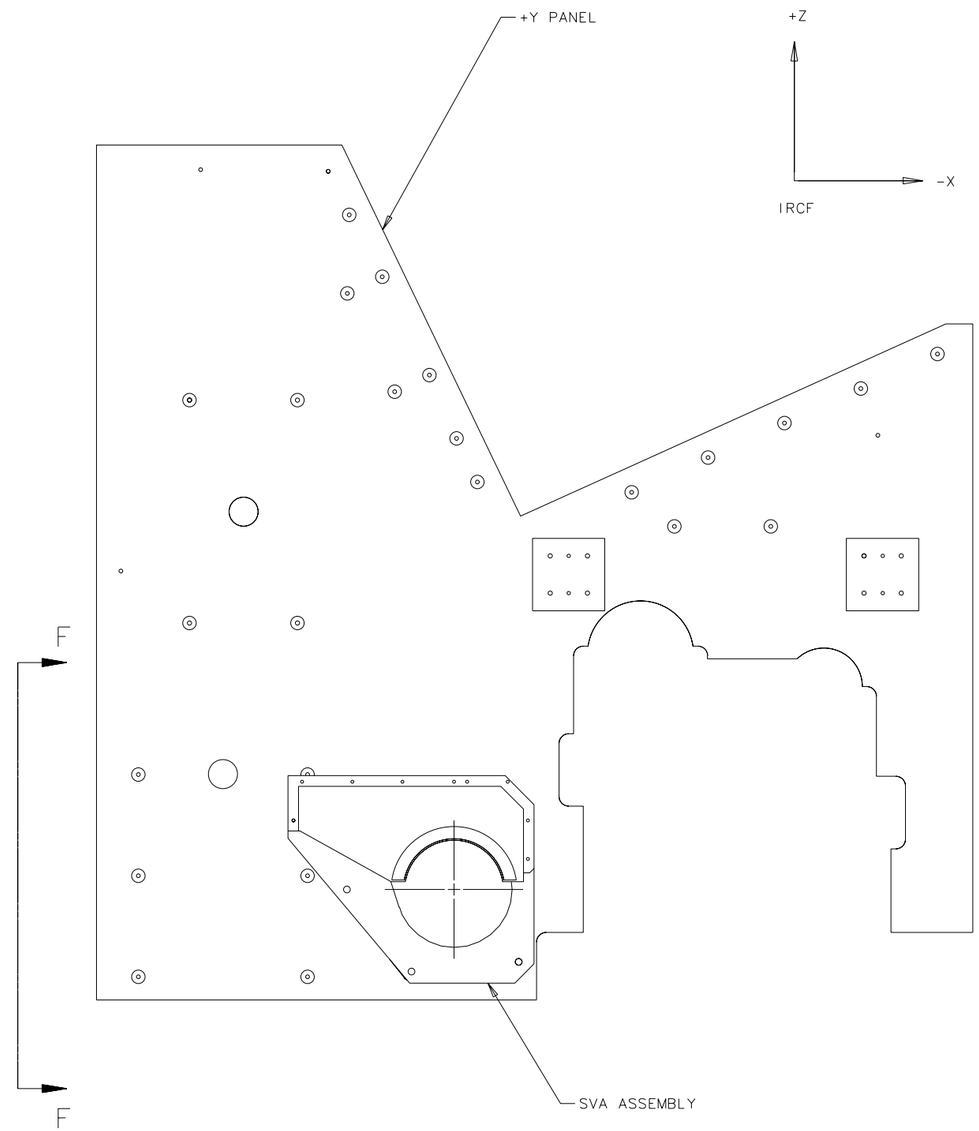

NOTES (UNLESS OTHERWISE SPECIFIED):

1. DIMENSIONS ARE MILLIMETERS.
2. TOLERANCES ARE +/- 0.5

INTERFACE CONTROL DRAWING

Lockheed Martin
Missiles and Space
Sunnyvale, CA USA
LOCKHEED MARTIN

+Y PANEL/
SVA SPACER INTERFACE

SIZE	CAGE CODE	DRAWING NO	REV
E	65113	SP-HIR-212-FIG8	–

SCALE 1/2 SH 8 OF 8

65113 DWG NO SP-HIR-212-FIG8 SH 1 REV –