HIRDLS

TC-MMS-454
(3164-SS091-TNO)
Issue 1

HIGH RESOLUTION DYNAMICS LIMB SOUNDER

Originator: N Crossland Date: 4 April, 2013

Subject/Title: **HIRDLS FM STH / SSH / SVA Venting**

Description/Summary/Contents:

This document details the venting provisions for the Flight Model (FM) HIRDLS Structure, Sunshield Subsystem, and Thermal Blankets.

Keywords: FM, Structure, STH, SSH, SVA, MLI, Venting

Purpose of thisDocument: FM STH venting compliance

Reviewed/Approved by: Date (yy-mm-dd):			

Matra Marconi Space
Anchorage Road
Portsmouth
Hampshire PO3 5PU
England

EOS

HIRDLS FLIGHT MODEL (FM)
STH / SSH / SVA
VENTING

Responsible Engineer: _____ Date: _____

Quality Assurance: _____ Date: _____

Project Manager: _____ Date: _____

© MATRA MARCONI SPACE UK LIMITED

THE COPYRIGHT IN THIS DOCUMENT IS THE PROPERTY OF MATRA MARCONI SPACE UK LIMITED. This document is supplied by Matra Marconi Space UK Limited on the express terms that it is to be treated as confidential and that it may not be copied, used or disclosed to others for any purpose except as expressly authorised under the terms of Contract No N2A 3R 0386.

Any person, other than the authorised holder, who finds or otherwise obtains possession of the document, should post it, together with his/her name and address, to the Registry, Matra Marconi Space UK Limited, Anchorage Road, Portsmouth, England, PO3 5PU. Postage will be refunded.

CONTENTS

1. SCOPE **4**

2. APPLICABLE DOCUMENTS **4**

3. VENTING REQUIREMENTS **5**

3.1 GENERAL 5
3.2 LAUNCH PRESSURE PROFILE 5
3.3 VENT AREA 5

4. VENT PROVISION **6**

4.1 PANEL VENTING 6
4.2 THERMAL BLANKET VENTING 6
4.3 SSH SUBSYSTEM VENTING 6
4.3.1 Panels *6*
4.3.2 Mechanisms *7*

5. CONCLUSIONS **7**

1. SCOPE

The purpose of this document is to detail the venting provisions for the HIRDLS FM STH, SSH, SVA, and Thermal Blankets at the point of delivery to the Instrument Integrator. The provisions for MLI venting may be reviewed by the Instrument Integrator at a later date to comply with specific Spacecraft level requirements which have not yet been fully defined.

The Project vent area requirements are not clear but analysis is performed to demonstrate that the provisions made are adequate in normal circumstances. A potential Spacecraft level MLI venting scheme is also analysed.

2. APPLICABLE DOCUMENTS

AD 1	GSFC 422-11-12-01 Revision B	General Interface Requirements Document (GIRD)
AD 2	D26477 February 2 1999	Interface Control Document for HIRDLS
AD 3	TC-MMS-371 Issue A	HIRDLS EM STH / SSH / SVA Venting
AD 4	TC-MMS-401 Issue 2	HIRDLS STH / SSH MLI Design Description
AD 5	SP-HIR-013 Revision T	Instrument Technical Specification

VENTING REQUIREMENTS

2.1 General

AD 1 Section 7.3.2 states :-

“The Spacecraft Contractor shall place the instrument such that the contamination products from the vents of one instrument will not directly impinge on another instrument’s contamination-sensitive surface nor directly enter another instrument’s aperture”.

AD 3 Figure 7.3.1 shows general vent directions for HIRDLS.

2.2 Launch Pressure Profile

AD 1 Section 10.5 defines a maximum atmospheric pressure decay rate of 1.0 kPa/sec.

2.3 Vent Area

There are no specific vent area requirements defined for the EOS Chemistry Project. It is normal practise for the launch vehicle authority to derive a minimum vent port area to unoccupied volume ratio from the launch pressure profile.

The venting analysis performed herein is evaluated against the following widely used ESA and U.S D.O.D. vent area criteria :-

$$\frac{A}{V} \geq 17.0 \times 10^{-6} cm^{-1}$$

The EOS Project Office have cited a ratio of 72.0×10^{-6} cm^{-1} (unconfirmed) which is also included in this assessment.

3. VENT PROVISION

3.1 Panel Venting

The largest STH structural features are the CFRP skinned honeycomb panels. Perforated honeycomb is used to allow a free flow of gases throughout the core and avoid enclosed cell volumes. Panel edges are sealed with either Kapton or Aluminium tape. Selected panel edges are perforated with 2mm diameter holes to allow venting in the desired directions.

Figure 1 shows the STH panel vent directions which are based on the guidelines provided in AD 2. Where possible, the primary vent direction is the instrument +Y axis. The +Z axis is also regarded as a safe vent direction to avoid contamination of adjacent instruments.

A further driver is to avoid venting into the Optical Bench cavity. To this end, vent holes (typically 30mm diameter) are provided in the panels to coincide with the vent paths from cavity mounted units which are required to vent through their baseplates in the direction of the instrument exterior.

Table 1 is an analysis of the venting provisions for each structure panel. It is based upon evacuation of the interior volume of the panel. The calculation basis is regarded as pessimistic as it ignores the volume occupied by the honeycomb ribbon material and any inserts.

As outlined in AD 3, the panel venting scheme was designed to the ESA guidelines for vent area to volume ratio, against which the margins are adequate (margin should be ≥ 1). However, in the cases of the baseplate and –Y panels the vent areas are insufficient against the recently cited EOS CHEM requirements. It is requested that this requirement be reviewed and formalised by the Project. If necessary, the hardware could be modified retrospectively to increase the number / size of vent holes.

3.2 Thermal Blanket Venting

The HIRDLS structure thermal blanket design is detailed in AD 4.

All blankets will be supplied with all edges perforated with 2mm diameter holes at a pitch of 20mm. The Instrument Integrator may choose to tape over the holes along selected edges to comply with specific Spacecraft level requirements which have not yet been fully defined. For analysis purposes, a potential MLI venting scheme based on the broad guidelines of AD 2 is considered herein. The scheme is illustrated in Figure 2 and the results of the analysis are presented in Table 2. The calculation basis is considered to be pessimistic as it assumes a 20mm thick air film entrapped by the blanket material. In all cases margins are adequate (≥ 1).

3.3 SSH Subsystem Venting

The venting provisions for the SSH subsystem comprising the Sunshield Door and Aperture Plate Assembly, and the Space View Aperture Mechanism Assembly are discussed below.

3.3.1 Panels

The venting provisions for the Sunshield Door and Aperture Plate panels are illustrated in Figure 3 and are based on the same general guidelines for the STH panels discussed in Section 4.1. The design margins are included in Table 1.

3.3.2 Mechanisms

The Sunshield Assembly comprises a motor, potentiometer, micro-switches and a HOP actuator, all of which are mounted on the aperture plate. These are space approved items with heritage and have adequate, and proven vent provisions incorporated at the design stage. The HOP actuator by its nature is a sealed device and hence, no internal contents are vented.

The SVA comprises a motor and micro-switches which are also space proven devices. To minimise any contamination, the MMS motor / gearhead design directs the vent path through the gearbox rather than through the motor head.

4. CONCLUSIONS

a) The STH panel venting provisions are compliant with ESA / U.S. D.O.D. vent area requirements.

b) The EOS Chemistry Project vent area requirement should be formalised before modification of the current STH vent design is considered.

c) The structure MLI is adequately vented and the design provides sufficient versatility to satisfy any vent direction requirements imposed at Spacecraft level.

d) The Sunshield Subsystem mechanisms incorporate proven venting methods.

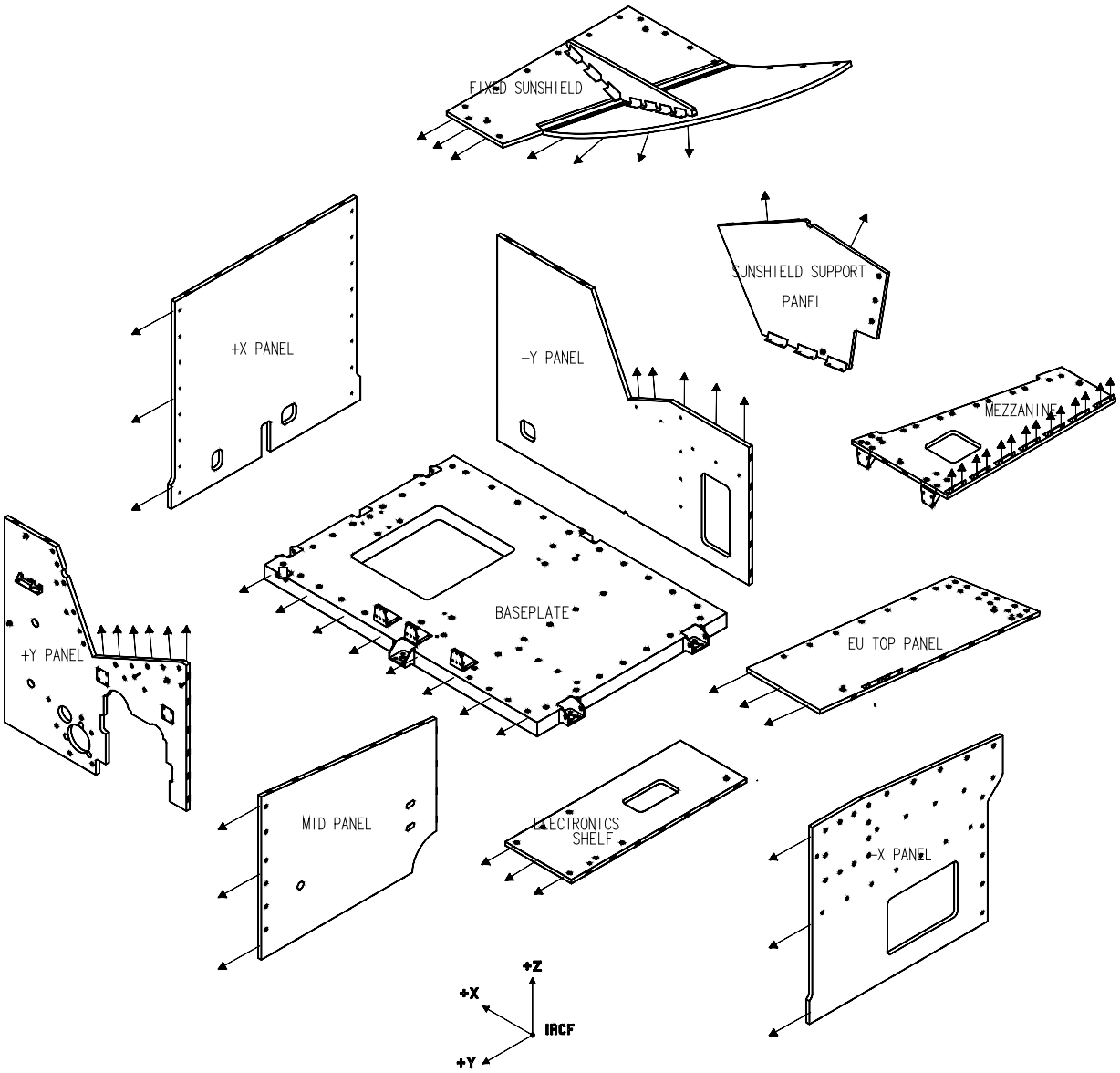

Figure 1 Panel Vent Directions

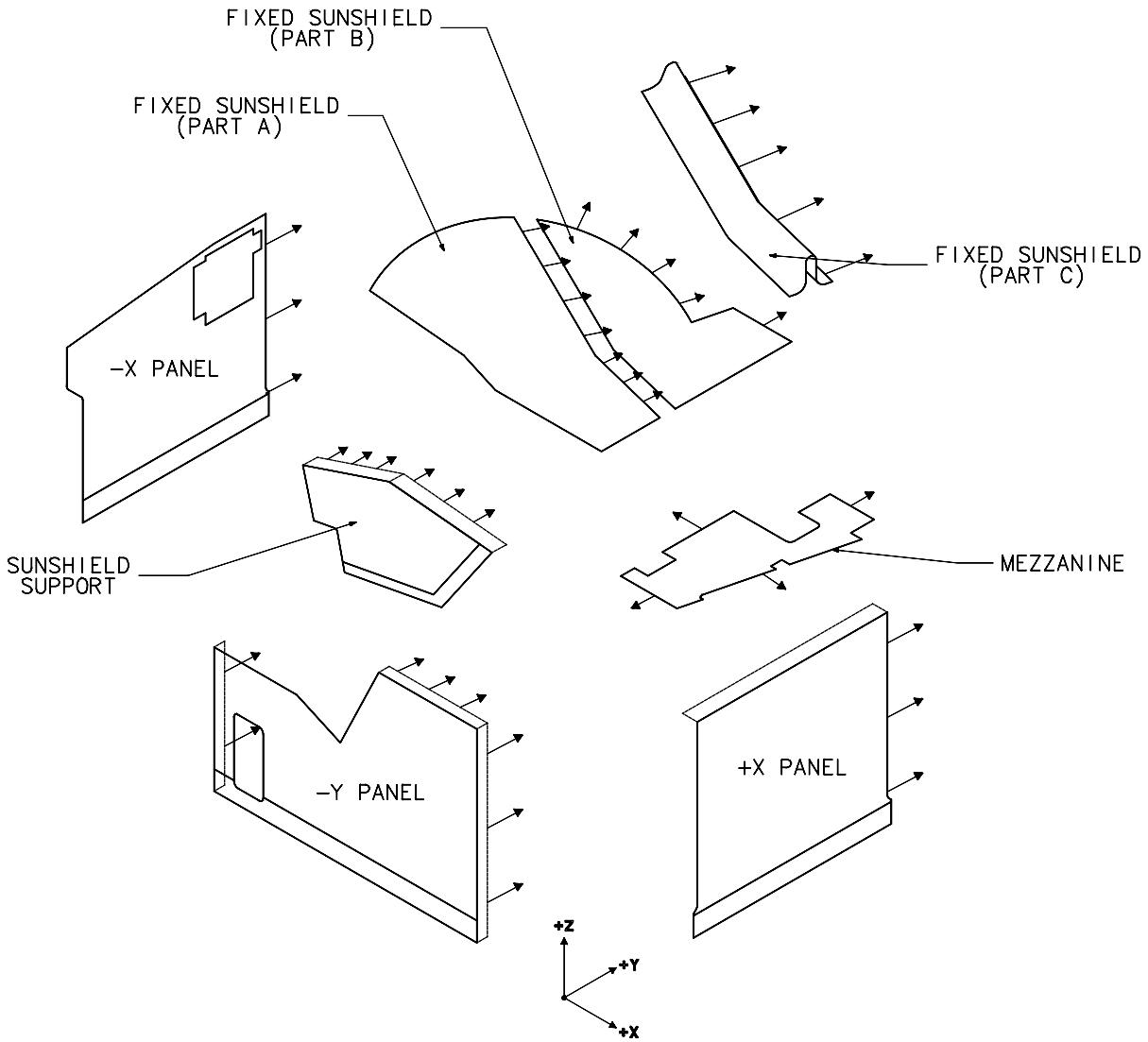

Figure 2 Thermal Blanket Vent Directions

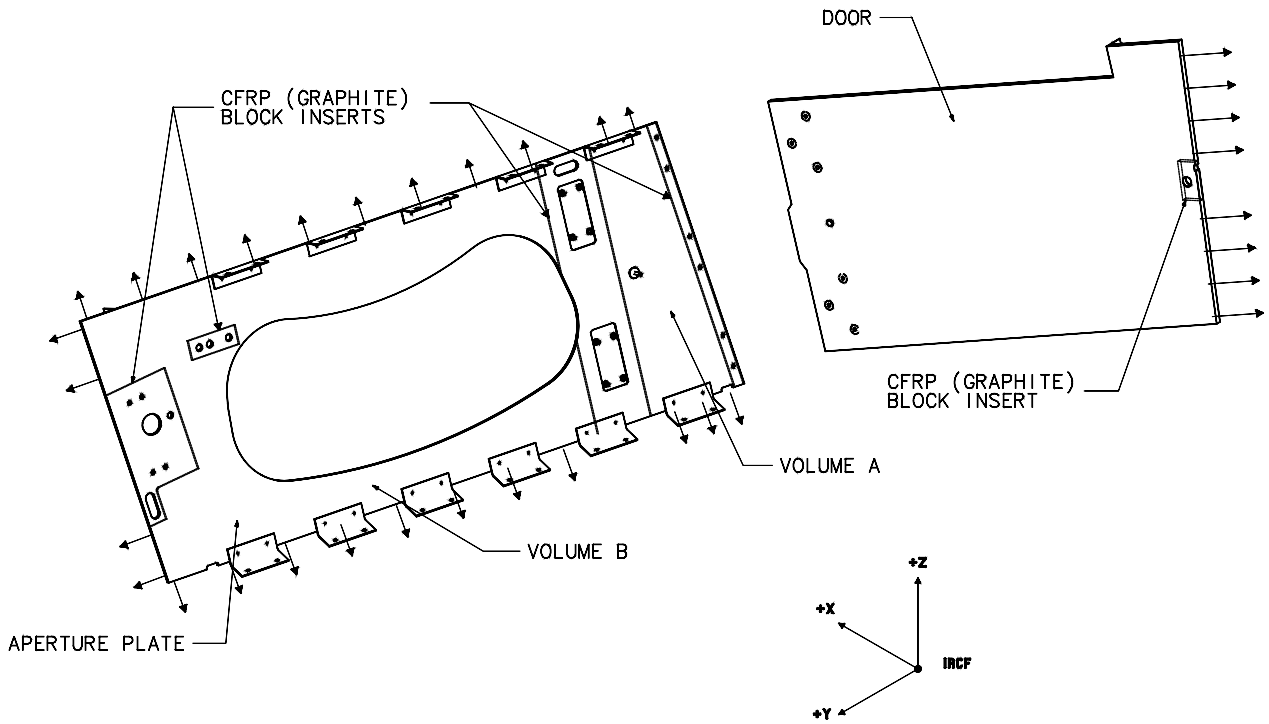

Figure 3 Sunshield Panel Vent Directions

HIRDLS STH Panel Venting Requirements

Nomenclature

A_{panel} = Surface area of panel
t_{panel} = Thickness of honeycomb
V = Unoccupied volume
l_v = Total length of vented edges
N_v = Number of vent holes
A = Vent area

Data

Vent hole pitch =	20	mm
Vent hole diameter =	2	mm
ESA / US D.O.D. Requirement :- A/V ≥	1.70E-05	cm^{-1}
EOS Chemistry Requirement :- A/V ≥	7.20E-05	cm^{-1}

Part	Panel	A_{panel} (m^2)	t_{panel} (mm)	V (m^3)	l_v (mm)	N_v	A (mm^2)	A/V (cm^{-1})	ESA / US D.O.D. Margin	EOS CHEM Margin
SA005	Sunshield Door	0.2843	8.816	0.0025	379.5	18	56.5	2.26E-04	>10	3.1
SA007	Aperture Plate (Volume A)	0.0512	3.816	0.0002	219.6	10	31.4	1.61E-03	>10	>10
	Aperture Plate (Volume B)	0.1690	3.816	0.0006	1734.1	86	270.2	4.19E-03	>10	>10
SX002	Baseplate	0.9803	61.408	0.0602	1255.0	62	194.8	3.24E-05	1.9	0.4
SX003	-X Outer Panel	0.6504	15.816	0.0103	843.3	42	131.9	1.28E-04	7.5	1.8
SX004	+X Outer Panel	0.7951	15.816	0.0126	885.7	44	138.2	1.10E-04	6.5	1.5
SX005	Mid Panel	0.5603	15.816	0.0089	704.2	35	110.0	1.24E-04	7.3	1.7
SX006	-Y Outer Panel	0.8466	15.816	0.0134	594.8	29	91.1	6.80E-05	4.0	0.9
SX007	+Y Outer Panel	0.4944	15.632	0.0077	488.4	24	75.4	9.76E-05	5.7	1.4
SX009	Mezzanine Panel	0.2750	15.816	0.0043	N/A(1)	N/A(1)	46.2	1.06E-04	6.2	1.5
SX010	Electronics Panel	0.2689	15.816	0.0043	329.8	16	50.3	1.18E-04	7.0	1.6
SX012	EU Top Panel	0.3886	15.816	0.0061	364.2	18	56.5	9.20E-05	5.4	1.3
SX013	Fixed Sunshield (Panel A)	0.4710	15.816	0.0074	688.1	34	106.8	1.43E-04	8.4	2.0
	Fixed Sunshield (Panel B)	0.3575	15.816	0.0057	279.8	13	40.8	7.22E-05	4.2	1.0
SX017	Sunshield Support Panel	0.2506	15.816	0.0040	368.7	18	56.5	1.43E-04	8.4	2.0
SX018	Stiffener Panel	0.0649	15.816	0.0010	1838.1	91	285.9	2.78E-03	>10	>10
			Total	0.1492						

Notes
(1) Mezzanine panel is vented from +Z face through 14 off ∅ 2.05 holes used for mid-panel cleat alignment

Table 1 Panel Venting

HIRDLS STH Thermal Blanket Venting Requirements

Nomenclature

A_{panel} = Surface area of blanket
V = Unoccupied volume
l_s = Total length of vented edges (MMS supplied)
l_d = Total length of vented edges (LMS desired)
N_s = Number of vent holes (MMS supplied)
N_d = Number of vent holes (LMS desired)
A_s = Vent area (MMS supplied)
A_d = Vent area (LMS desired)

Data

Thickness of blanket contained air film =	20	mm
Vent hole pitch =	20	mm
Vent hole diameter =	2	mm
ESA / US D.O.D. Requirement :- A/V ≥	1.70E-05	cm^{-1}
EOS Chemistry Requirement :- A/V ≥	7.20E-05	cm^{-1}

Venting (As Supplied)

Part	Blanket	A_{panel} (m^2)	V (m^3)	l_s (mm)	N_s	A_s (mm^2)	A/V (cm^{-1})	ESA / US D.O.D. Margin	EOS CHEM Margin
TH002	-X Outer Panel	0.6539	0.0131	4703.5	235	738.3	5.65E-04	>10	7.8
TH003	+X Outer Panel	0.8903	0.0178	3640.2	182	571.8	3.21E-04	>10	4.5
TH004	-Y Outer Panel	1.0215	0.0204	5113.6	255	801.1	3.92E-04	>10	5.4
TH008	Mezzanine Panel	0.2127	0.0043	2798.5	139	436.7	1.03E-03	>10	>10
TH006	Fixed Sunshield (4a)	0.4616	0.0092	3005.4	150	471.2	5.10E-04	>10	7.1
	Fixed Sunshield (4b)	0.2770	0.0055	2627.0	131	411.5	7.43E-04	>10	>10
	Fixed Sunshield (4c)	0.3948	0.0079	2782.9	139	436.7	5.53E-04	>10	7.7
TH007	Sunshield Support Panel	0.2507	0.0050	2036.0	101	317.3	6.33E-04	>10	8.8

Venting (S/C Requirements)

Part	Blanket	A_{panel} (m^2)	V (m^3)	l_d (mm)	N_d	A_d (mm^2)	A/V (cm^{-1})	ESA / US D.O.D. Margin	EOS CHEM Margin
TH002	-X Outer Panel	0.6539	0.0131	843.3	42	131.9	1.01E-04	5.9	1.4
TH003	+X Outer Panel	0.8903	0.0178	885.7	44	138.2	7.76E-05	4.6	1.1
TH004	-Y Outer Panel	1.0215	0.0204	1951.8	97	304.7	1.49E-04	8.8	2.1
TH008	Mezzanine Panel	0.2127	0.0043	2798.5	139	436.7	1.03E-03	>10	>10
TH006	Fixed Sunshield (4a)	0.4616	0.0092	1013.1	50	157.1	1.70E-04	>10	2.4
	Fixed Sunshield (4b)	0.2770	0.0055	946.0	47	147.7	2.67E-04	>10	3.7
	Fixed Sunshield (4c)	0.3948	0.0079	998.6	49	153.9	1.95E-04	>10	2.7
TH007	Sunshield Support Panel	0.2507	0.0050	739.8	36	113.1	2.26E-04	>10	3.1

Table 2 Thermal Blanket Venting

DISTRIBUTION LIST

INTERNAL	EXTERNAL
N Crossland	N Morris (RAL)
I Stewart	
A Stewart	
T Forward	

CHANGE RECORD

CHANGE NUMBER	CLASS	CHANGE DETAILS	ISSUE
3164-	-	First Issue	1