HIRDLS

HIGH RESOLUTION DYNAMICS LIMB SOUNDER

Originator: John Amos Date: 25th July 1997

Subject/Title: **STH AND SSH FAILURE MODES, EFFECTS, & CRITICALITY ANALYSIS**

Description/Summary/Contents:

The purpose of this TC is to analyse likely failure modes and effects of HIRDLS. Common failure effects are summarised, and a critical items list given. In addition, results from the FMECA will be used to highlight weak areas in the design so that, if necessary, precautions can be taken to remove suspect areas from the design.

Keywords: HIRDLS, Structure, Thermal, Sunshield, Reliability, FMECA

Purpose of this Document: STH/SSH FMECA

Reviewed/Approved by:			
Date (yy-mm-dd):			

Rutherford Appleton Laboratory
Chilton
Didcot
Oxfordshire
OX11 0QX
United Kingdom

Matra Marconi Space UK
Anchorage Road
Portsmouth
Hants PO3 5PU
United Kingdom

EOS

STH AND SSH

FAILURE MODES, EFFECTS AND CRITICALITY ANALYSIS

(PA-HIR-139)

Prepared by: _____ *Date:* _____

J. E. Amos

Approved by: _____ *Date:* _____

© MATRA MARCONI SPACE UK LIMITED

THE COPYRIGHT IN THIS DOCUMENT IS THE PROPERTY OF MATRA MARCONI SPACE UK LIMITED. This document is supplied by Matra Marconi Space UK Limited on the express terms that it is to be treated as confidential and that it may not be copied, used or disclosed to others for any purpose except as expressly authorised under the terms of Contract No N2A 3R 0386.

Any person, other than the authorised holder, who finds or otherwise obtains possession of the document, should post it, together with his/her name and address, to the Registry, Matra Marconi Space UK Limited, Anchorage Road, Portsmouth, England, PO3 5PU.
Postage will be refunded.

THIS PAGE INTENTIONALLY LEFT BLANK

TABLE OF CONTENTS

1. INTRODUCTION 7

2. APPLICABLE DOCUMENTS 7

3. ABBREVIATIONS 7

4. DEFINITIONS 9

5. APPLICABILITY 9

6. FUNCTIONAL DESCRIPTION 9

6.1 GENERAL 9

6.2 SUNSHIELD SUB-ASSEMBLY 10

6.3 SPACE VIEW APERTURE SHIELD SUB-ASSEMBLY 10

6.4 HEATERS 11

7. FAILURE MODES, EFFECTS, AND CRITICALITY ANALYSIS 14

7.1 CRITICALITY CODES 14

8. COMMON FAILURE EFFECTS SUMMARY LIST 15

9. CONCLUSIONS 16

10. APPENDIX - FMECA WORK SHEETS 19

TABLES

Table 1 - Criticality Codes and Definitions 11

Table 2 - Common Failure Effects Summary List 12

FIGURES

1. HIRDLS SUNSHIELD 9

2. HIRDLS SPACE VIEW APERTURE 9

3. HIRDLS SUNSHIELD RELIABILITY BLOCK DIAGRAM 10

4. HIRDLS SPACE VIEW APERTURE RELIABILITY BLOCK DIAGRAM 10

5. HIRDLS HEATER CONFIGURATION RELIABILITY BLOCK DIAGRAM 10

1. INTRODUCTION

This Failure Modes, Effects, and Criticality Analysis (FMECA), is generated in response to the requirements found in Goddard Space Flight Center, Earth Orbiting System, Performance Assurance Requirements for EOS General Instruments, GSFC 420-05-01. Detailed High Resolution Dynamics Limb Sounder, hereafter abbreviated HIRDLS, reliability requirements are also elaborated in, GSFC 424-11-13-01, Mission Assurance Requirements, for the HIRDLS EOS Chemistry Mission.

The type of analysis performed is to a narrative tabular method that records the failure modes and effects for the configurations under consideration, and supplies a criticality index of findings. The FMECA contained herein is restricted to singular failures, and does not include multiple or combinational failures at a particular instant in time because of the their low order of probability.

The main purpose of the FMECA is to thoroughly examine the present design to discover the likely failure modes and effects. The results from the FMECA will be used to recommend the removal of critical areas from the configurations, or take the necessary precautions to eliminate the susceptibility of the designs to unwanted failure effects.

2. APPLICABLE DOCUMENTS

SP-HIR-13P	HIRDLS Instrument Technical Specification
GSFC 420-05-01	Earth Orbiting System (EOS), performance Assurance Requirements, for EOS General Instruments.
GSFC 424-11-13-01	Mission Assurance Requirements, for the HIRDLS EOS Chemistry Mission
553942	Fordsat Quantitative Reliability Assessment Specification.
3164-SS004-ANR	HIRDLS Configuration and Thermal System, Reliability Prediction.

3. ABBREVIATIONS

CDR	Critical Design Review
EOS	Earth Orbiting System
FMECA	Failure Modes Effects, and Criticality Analysis
HDRM	Hold Down and Release Mechanism
HIRDLS	High Resolution Dynamics Limb Sounder
HOP	High Output Paraffin (actuator)
LM	Lockheed Martin
MMS	Matra Marconi Space UK
PDR	Preliminary Design Review
RAL	Rutherford Appleton Laboratory
SSH	Sunshield Sub-system
STH	Structure Thermal Sub-system
SVA	Space View Aperture

TLM	Telemetry

4. DEFINITIONS

Reliability - The ability of an item to perform a required function under stated conditions, for a stated period of time. (For HIRDLS mission time is taken as five years)

Failure- The termination of the ability of an item to perform its required function.

5. APPLICABILITY

This FMECA is for the HIRDLS configuration that comprises the moveable sunshield, space view aperture shield, structure, and thermal system that comprises part of the HIRDLS Instrument. The FMECA excludes 'free issue items' that are part of the HIRDLS Instrument.
Active elements in the design are taken into account, other items such as inert mechanical items are disregarded.

6. FUNCTIONAL DESCRIPTION

6.1 General

The HIRDLS Instrument is planned to be flown on one of NASA's, EOS A Series, polar orbiting satellites. Matra Marconi Space UK is responsible for the design and development of three important features of the HIRDLS Instrument, these being a moveable Sunshield, Space View Aperture Shield, and temperature stabilisation Heaters

HIRDLS is an infrared limb scanning radiometer designed to sound the upper troposphere, stratosphere, and megosphere. It will measure temperature, geopotential height gradients, concentrations of gasses, locations of polar stratospheric clouds, and cloud top heights. Profiles will be obtained over the entire globe including both poles, by day and night, with complete coverage being obtained over 12 hours.

The HIRDLS Sunshield Assembly is required to shield the HIRDLs light aperture to prevent direct sunlight from entering the instruments optics. The sunshield is a hinged flap that is held into a closed position during the satellite launch stage by a latch mechanism. The flap is released after the satellite has reached its required position in orbit. From this time onwards the sunshield is moved about its hinge point to shade the instruments aperture from the damaging effects of sunlight on its optical sensors, and to reduce solar gains into the instrument.

The HIRDLS Space View Aperture Shield has the function of the prevention of unwanted direct sunlight and solar reflections from damaging the instruments optics. The shield has the added function of the provision of a dust shield while HIRDLS is on the ground and in the launch stage. The shield is of a shape suitable for complete coverage of the space view aperture. There is no provision for any intermediate positions over the aperture and the cover shield is either fully closed, or fully open.

Temperature stabilisation heaters are provided at strategic positions on the HIRDLS instrument to allow correct operation of it vital parts at sub-zero temperatures experienced in space.

6.2 Sunshield Sub-Assembly

The sunshield is a hinged flap of rectangular dimensions. The flap is secured at the opposite end of the hinge line before deployment in space with a latching pin arrangement. Thus the sunshield is held firmly and securely to counteract vibration during the rocket launch phase. When the satellite is stabilised in space and HIRDLS is ready to be used the sunshield is unlatched. This operation is made by withdrawing two latch pins from the body of the sunshield flap. Latch pin movement is made with the use of a hold-down and release mechanism that uses a high output paraffin (HOP) actuator. Heat is applied to the paraffin wax within the actuator to make it expand, this in turn moves a plunger linearly that delatches the sunshield flap. Heat is generated within the HOP actuator by the application of electrical current to two resistive elements in parallel that give in reliability terms an active redundant arrangement. If any one out of the two heating elements became open circuit for any reason, then the other element is rated sufficient to allow heating to continue.

Sunshield angular movement, after delatching, is accomplished with the use of a deployment mechanism. This includes an electrical stepper motor linked to a drive reduction gearbox to give sufficient angular movement torque to the flap, at the desired speed. The motor and reduction gearbox are housed at the flap hinge line. The motor electric windings incorporate two sets of windings, one of which is held in a standby redundant mode to enhance the reliability of the motor. In the rare event of operational winding failure, i.e. open circuit, then the other dormant winding can be switched in for operation of the motor. A rotary potentiometer is included at the flap hinge line behind the motor to sense the angular position of the sunshield flap, and to provide a feedback signal to the drive electronics. Included in the deployment mechanism are four microswitches to confirm when; the door is closed and preloaded for launch; latch is released; door fully delpoyed; and door parked in the closed position. Around the light aperture are housed eight (four redundant) opto devices to sense the flap shadow and hence its position.

The sunshield will open and close 16 times per day, i.e. 32 operations, giving a maximum possible 58,400 reversals in a 5 year mission time. The deployment angular movement is specified to be 116°, within a time of 51 seconds maximum from a safe position to fully open.
However, from the reliability viewpoint the sunshield will be powered up during its mission time which is taken as five years.

6.3 Space View Aperture Shield Sub-Assembly

The Space View Aperture Shield is of a circular shape to completely cover and protect the input aperture. The cover is driven in an angular movement over the aperture with a brushed D.C torque motor, and includes position micro switches. The motor has redundant windings as described for the sunshield motor. When the cover is rotated to open the space aperture it is progressively lifted during its rotation to clear the opening. The shield has no intermediate positions, and is either completely closed or completely open. A labyrinth seal is provided under the shield to exclude dust particles of size greater than 0.05 mm diameter. The shield is designed to move from the open to closed positions in less than 10 seconds.

It is anticipated at this stage in the project that the space view aperture shield will operate a minimum of approximately 100 times, or 200 reversals on the ground and in space, during the 5 year mission life. The time specified to move from the closed position to fully open is 10 seconds.

6.4 Heaters

Heaters and temperature sensors are required to maintain the thermal stability of the equipment during the operational lifetime in order to achieve stringent pointing stability requirements for the instrument.

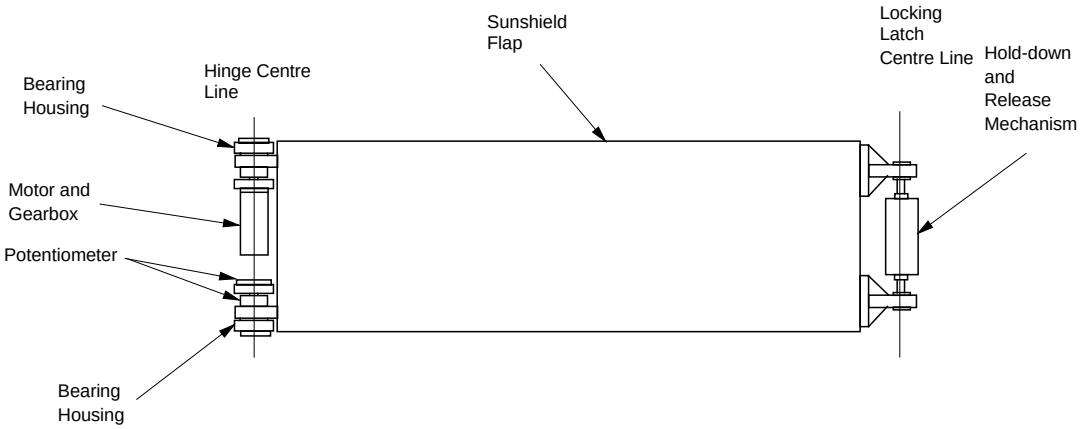

HIRDLS SUNSHIELD - FIGURE 1

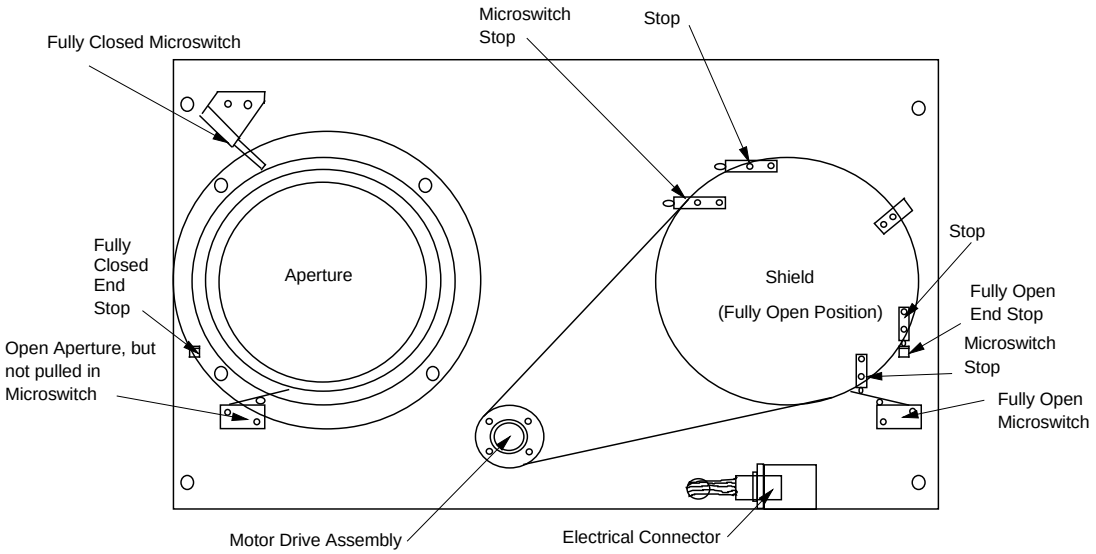

HIRDLS SPACE VIEW APERTURE - FIGURE 2

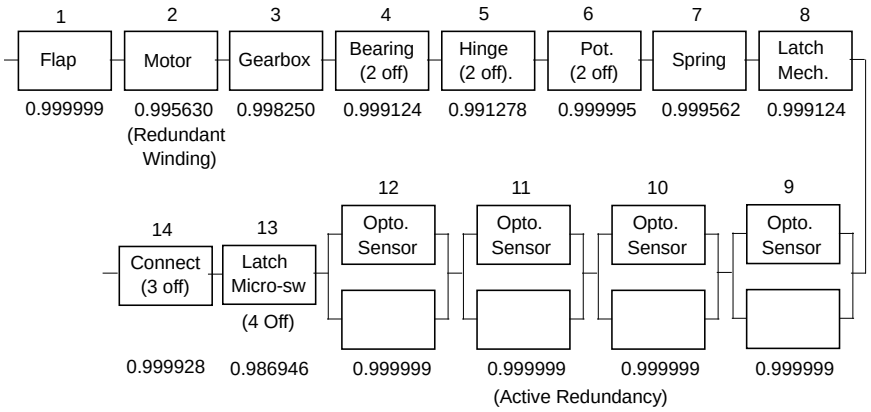

HIRDLS SUNSHIELD RELIABILTY BLOCK DIAGRAM - FIGURE 3

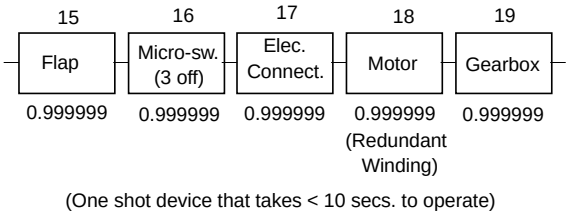

HIRDLS SPACE VIEW APERTURE RELIABILTY BLOCK DIAGRAM - FIGURE 4

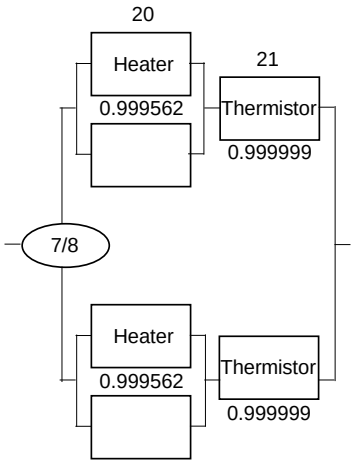

HIRDLS HEATER CONFIGURATION RELIABILTY BLOCK DIAGRAM - FIGURE 5

7. FAILURE MODES, EFFECTS, AND CRITICALITY ANALYSIS

This FMECA for the HIRDLS configuration covers parts of the instrument that MMS(UK) are responsible for, and covers functional level failures within the configuration that are likely to influence instrument performance. The loss or degradation of the various mechanical and electrical functions is recorded to publish information on the failure effects of these outputs on the instrument as a whole. Reliability block diagrams that indicate the level of analyses are given at Figures 3. 4, and 5. Each block description in the diagrams is investigated at an appropriate level to predict the outcome failure at the next logical assembly level, eventually leading to the failure influence at instrument level. The analyses therefore progresses upwards from a low hierarchical level to instrument level.

7.1 Criticality Codes

Criticality codes are assigned to each entry in the FMECA work sheets to indicate a judgement as to the importance of the failure effects on the assemblies studied. These are presented as qualitative judgements. Quantitative figures in predicted failure rate terms are also given in the work sheets.

The criticality codes used in the FMECA are taken from Goddard Space Flight Center, EOS, Performance Assurance Requirements, for EOS Instruments, document GSFC 420-05-01, and are detailed in Table 1 below.

Failure rates used to quantify the possible frequency of failure are taken from MMS(UK), HIRDLS Configuration and Thermal System, Reliability Prediction, 3164-SS004-ANR.

CRITICALITY CODE	FOR ASSEMBLY ANALYSIS LEVEL
1	A single failure that could result in loss of life or serious injury to personnel, or loss of a launch facility, the launch vehicle, or a primary mission objective. (For failure involving potential loss of life or serious injury to personnel, redundant designs, both of which if failure would result in a Criticality 1 failure, shall be considered.)
2	A single failure that could result in damage to a launch facility or launch vehicle, significant degradation of science products (as defined by the Project), or loss of a secondary mission objective,
3	Loss of redundancy or an effect less severe than that of Criticality 2 failure mode.

Table 1 - Criticality Codes and Definitions

8. COMMON FAILURE EFFECTS SUMMARY LIST

The FMECA Work Sheets result in the summarised descriptions as follows in Table 2, which gives an index of importance by the addition of common failure effect failure rates.

FMECA ITEM NO.	FAILURE EFFECT	FAILURE RATE ($\Sigma\lambda$)	REMARKS
1,2,3,4, 5,7,8,1 2, 3	Sunshield flap unable to be rotated	391.65	
2	Sunshield degraded operation	100	
2,12,16	Out gassing/optics contaminated	200 (Worst case)	(The failure rate of the HOP actuator is uncertain)
13,15,1 7,17	Space view aperture flap cannot be rotated or lets in light or dust	140.55	
16	Space view aperture flap slow to open	140	
16	Space view aperture flap intermittent operation	140	
18	Loss of heater pair	40	
19	Loss of ability to control heater temperature with possible over or under heating	0.168	

Note: λ is failure rate in FITS (failures in 10^9 hours)

Table 2 - Common Failure Effects Summary List

9. CRITICAL ITEMS

The items listed below are considered to be critical for the operation of the HIRDLS Instrument. The FMECA details all of these items as Criticality Category 2, and failure of these items would cause significant degradation of a science product. No Criticality Category 1 failure items are found. See Table 1 for criticality code descriptions.

Sunshield

a. Flap
b. Stepper Motor
c. Gearbox
d. Hinge Bearings
e. Hinges
f. Spring, latch
g. Latch Mechanism
h. HOP Actuator
i. Electrical Connectors

Space View Aperture

j. Flap
k. Electrical Connector
l. Motor
m. Gearbox

Heater Arrangement

None

9. CONCLUSIONS

The FMECA for the HIRDLS Configuration and Thermal System results in the main conclusion that no Criticality 1 failures are apparent in the design. This is a failure that could result in loss of life or serious injury to personnel, or loss of launch facility, the vehicle, or primary mission objective. The ‘primary mission objective ‘ is understood to be pertinent to the complete EOS satellite. The majority of postulated failures are discovered to fall into the area of Criticality 2, and could cause ‘significant degradation of science products’, in this case HIRDLS. Twelve failure types are found to be Criticality 3 which is loss of redundancy or minor degradation.

The sunshield flap mechanism is shown to have the most probable failure effects of all because of its complexity compared with the space view aperture flap, and heater arrangements. The most prominent failure, if it were to occur, is expected to be loss of sunshield flap rotation. This is caused by a variety of failure types, and all are most unlikely to happen during a mission of five years because of their low predicted failure rates.

Out-gassing from the Motors and HOP Actuator appear to be the next most prominent failure effect in statistical terms. This is a very remote possibility because expected failure rates for this occurrence are even lower than the sunshield failure effects. Ample precautions have been made to prevent contamination of the instrument by an out-gassing fault. Overheating of the motor is thought to be at most a very remote possibility, and the HOP actuator is believed to contain redundant ‘o’ ring seals to prevent paraffin loss.

Next in order of expected failure effects is the space field aperture assembly with the remotest possibility of non operation where it will not rotate, is slow in movement, or intermittent in operation. The space field aperture flap in reliability terms can be considered as a one shot device in that it takes only 10 seconds to operate. The probability of success in operation over this short period in statistical calculations approaches 1.

Finally, the heater arrangement poses the least expected area for concern, and is anticipated to be ultra reliable because of the redundancy concept included within its design.

10. APPENDIX - FMECA WORK SHEETS

FAILURE MODES, EFFECTS and CRITICALITY ANALYSIS for: HIRDLS Number: Issue: D
Equipment: HIRDLS Sub-Assembly: Sunshield System: EOS Operational Phase Mission Phase: In Orbit
Functional/Reliability Block Diagram: Figures 1 and 3

(a) No.	(b) Item	(c) Block	(d) Function	(e) Assumed Failure Mode	(f) Failure Probability (Failure Rate)	(g) Resulting Performance of, and Effects on Assembly	(h) Observable Symptoms	(i) Prevention or Compensation Methods	(j) Criticality	(k) Recommendations and Remarks
1	Sunshield Flap (1 off)	1	To prevent sunlight from entering the instruments optical system	Structural damage such as deformation, cracking, fracture.	Infinitely low	Sunshield flap unable to be rotated	Instrument failure or degradation	Substantial design margins	2	
2	Stepper Motor (1 off)	2	To provide rotational torque to give an angular movement to sunshield flap at required speed	i Ceases to rotate	100 (all cases)	Sunshield flap unable to be rotated	TLM from position potentiometers show an abnormal indication	Motor has standby redundant winding	2	Motor has an excellent space flight reliability heritage.
				ii Slow rotation		Degraded operation	Ditto	Ditto		
				iii Intermittent rotation		Ditto	Ditto	Ditto		
				iv Overheats		Out gassing	Instrument degradation	Ditto		
3	Motor Gearbox (1 off)	3	To increase velocity ratio of motor rotation, and supply sufficient torque to drive sunshield	Gearbox seizes up and does nor rotate, or gives intermittent rotation	40	Sunshield flap unable to be rotated or intermittent rotation	TLM from position potentiometers show an abnormal indication	Substantial design margins	2	Gearbox has an excellent space flight reliability heritage.
4	Hinge Bearing (2 off)	4	To provide a low friction pivot for the sunshield.	Bearing seized-up	20 (10 each)	As Item 3	As Item 3	Dry lubrication	2	
5	Hinge (2 off)	5	To provide a	Hinge seized-up	200	As Item 3	As Item 3	Substantial	2	

FAILURE MODES, EFFECTS and CRITICALITY ANALYSIS for: HIRDLS Number: Issue: D
Equipment: HIRDLS Sub-Assembly: Sunshield System: EOS Operational Phase Mission Phase: In Orbit
Functional/Reliability Block Diagram: Figures 1 and 3

(a) No.	(b) Item	(c) Block	(d) Function	(e) Assumed Failure Mode	(f) Failure Probability (Failure Rate)	(g) Resulting Performance of, and Effects on Assembly	(h) Observable Symptoms	(i) Prevention or Compensation Methods	(j) Criticality	(k) Recommendations and Remarks
			pivot for the sunshield flap		(100 each)			design margins		
6	Potentiometer (1 off)	6	To provide a TLM signal that represents sunshield angular rotation	Open or short circuit	0.108 (0.054 each)	No effect	No sunshield flap TLM	Other potentiometer	3	
7	Spring (1 off)	7	To provide contact with latch pin pusher, and compress HOP shaft back to unactivated position	Loss of compression	10	Sunshield flap cannot be rotated	TLM indicates that the flap cannot be unlatched	None	2	
8	Latch mechanism (1 off)	8	To hold flap in a safe position during launch	Sunshield flap cannot be unlatched	20	Sunshield flap cannot be rotated	TLM indicates that the flap cannot be unlatched	HOP actuator has a redundant heater	2	See also Item 13
9	Opto sensor (4 pairs)	9-12	To sense sunshield shadow	Open or short circuit	32 (4 each)	No effect	None	Redundant opto sensors provided	3	
10	Microswitch (4 off)	13	To confirm that: i. Door is closed & preloaded for launch ii. Latch released iii. Door fully deployed iv. Door parked in closed position	No or spurious output electrical signal to TLM	300 (75 each)	None , but causes uncertainty in operational monitoring	Adverse TLM signal.	None	3	(Door is not preloaded and latched)

FAILURE MODES, EFFECTS and CRITICALITY ANALYSIS for: HIRDLS Number: Issue: D
Equipment: HIRDLS Sub-Assembly: Sunshield System: EOS Operational Phase Mission Phase: In Orbit
Functional/Reliability Block Diagram: Figures 1 and 3

(a) No.	(b) Item	(c) Block	(d) Function	(e) Assumed Failure Mode	(f) Failure Probability (Failure Rate)	(g) Resulting Performance of, and Effects on Assembly	(h) Observable Symptoms	(i) Prevention or Compensation Methods	(j) Criticality	(k) Recommendations and Remarks
11	Electrical Connector (3 off)	14	To connect power to motor, HOP, and TLM sensors	Complete connector disconnected. Short circuit or open circuit between pins or shell	1.65 (0.55 each)	Sunshield flap cannot be rotated (Worst case)	Adverse TLM	Redundant power inputs/outputs for motor, HOP, and TLM	2 or 3	
12	High Output Paraffin (HOP) Actuator (1 off)	8	To push out latch pins and to return latch pins via spring	i. Heater will not warm HDRM will not delatch ii. HOP actuator becomes damaged (I.e bent etc.) HDRM will not latch/delatch iii. HOP Actuator leaks paraffin wax on to HDRM	TBA TBA TBA	Sunshield flap cannot be rotated Ditto Instrument optics possibly contaminated	Adverse microswitch TLM indication Ditto Instrument performance degradation	Redundant heater in HOP Actuator None Redundant seals in actuator	3 2 2	.
13	Space View Aperture Flap (1 off)	15	To prevent unwanted light and dust from entering the instrument optics	Structural damage such as deformation, cracking, fracture.	Infinitely low	Space View Aperture flap cannot be opened or lets in light or dust to optics	Adverse TLM warning	Substantial design margins	2	
14	Microswitch (3 off)	16	To send a TLM signal that indicates; flap fully closed, flap fully open, and flap not pulled down in closed position	No or spurious output electrical signal to TLM	225 (75 each)	None if all else is well	Adverse TLM warning	None	3	
15	Electrical	17	To provide	Complete connector	0.55	Space View	Adverse TLM	None	2	

FAILURE MODES, EFFECTS and CRITICALITY ANALYSIS for: HIRDLS Number: Issue: D
Equipment: HIRDLS Sub-Assembly: Sunshield System: EOS Operational Phase Mission Phase: In Orbit
Functional/Reliability Block Diagram: Figures 1 and 3

(a) No.	(b) Item	(c) Block	(d) Function	(e) Assumed Failure Mode	(f) Failure Probability (Failure Rate)	(g) Resulting Performance of, and Effects on Assembly	(h) Observable Symptoms	(i) Prevention or Compensation Methods	(j) Criticality	(k) Recommendations and Remarks
	Connector (1 off)		power supply to motor and microswitches	disconnected. Short circuit or open circuit between pins or shell		Aperture flap cannot be opened or lets in light or dust to optics	warning			
16	Motor (1 off)	18	To lift and rotate space view flap	i Ceases to rotate	100 (all cases)	Space view flap will not open/close	Adverse TLM warning	Redundant winding	2	
				ii Slow rotation		Space view aperture flap slow to open	Adverse TLM warning	Redundant winding	3	
				iii Intermittent rotation		Space view aperture flap intermittent in operation	Adverse TLM warning	Redundant winding	2	
				iv Overheats		Motor out gassing	Possible contamination of instrument optics	None	2	
17	Motor Gearbox	19	To produce the correct torque and speed for space view	i Ceases to rotate	40 (All cases)	Space view flap will not open/close	Adverse TLM warning	None	2	

FAILURE MODES, EFFECTS and CRITICALITY ANALYSIS for: HIRDLS Number: Issue: D
Equipment: HIRDLS Sub-Assembly: Sunshield System: EOS Operational Phase Mission Phase: In Orbit
Functional/Reliability Block Diagram: Figures 1 and 3

(a) No.	(b) Item	(c) Block	(d) Function	(e) Assumed Failure Mode	(f) Failure Probability (Failure Rate)	(g) Resulting Performance of, and Effects on Assembly	(h) Observable Symptoms	(i) Prevention or Compensation Methods	(j) Criticality	(k) Recommendations and Remarks
			aperture flap rotation	ii Slow rotation		Space view aperture flap slow to open	Adverse TLM warning	None	3	
				iii Intermittent rotation		Space view aperture flap intermittent in operation	Adverse TLM warning	None	2	
18	Heater (8 pairs)	20	To stabilise the operational temperature of the HIRDLS instrument	Open circuit	80 (10 each)	None	None	Redundant heater	3	
				Short circuit		Loss of heater pair	Marginal loss of temperature stabilisation	Any pair out of eight can fail	3	
19	Thermistor (8 off)	21	To sense heater temperature	Open circuit or short circuit	0.168 (0.021 each)	Loss of ability to control heater temperature with possible over or under heating	Marginal loss of temperature stabilisation	Any one out of eight can fail	3	

DOCUMENT CHANGE DETAILS

ISSUE	CHANGE AUTHORITY	CLASS	RELEVANT INFORMATION/INSTRUCTIONS
D			Document re-written to concur with design changes

DISTRIBUTION LIST

INTERNAL	EXTERNAL
J. M. Harvey M. E. Humphries (Bristol) T.J. Forward R. Moss P. Pearson J. E. Amos	N. Morris (RAL)