HIRDLS

FM SPACE VIEW APERTURE ASSEMBLY DESIGN CERTIFICATION DATA PACK

TC-MMS-474

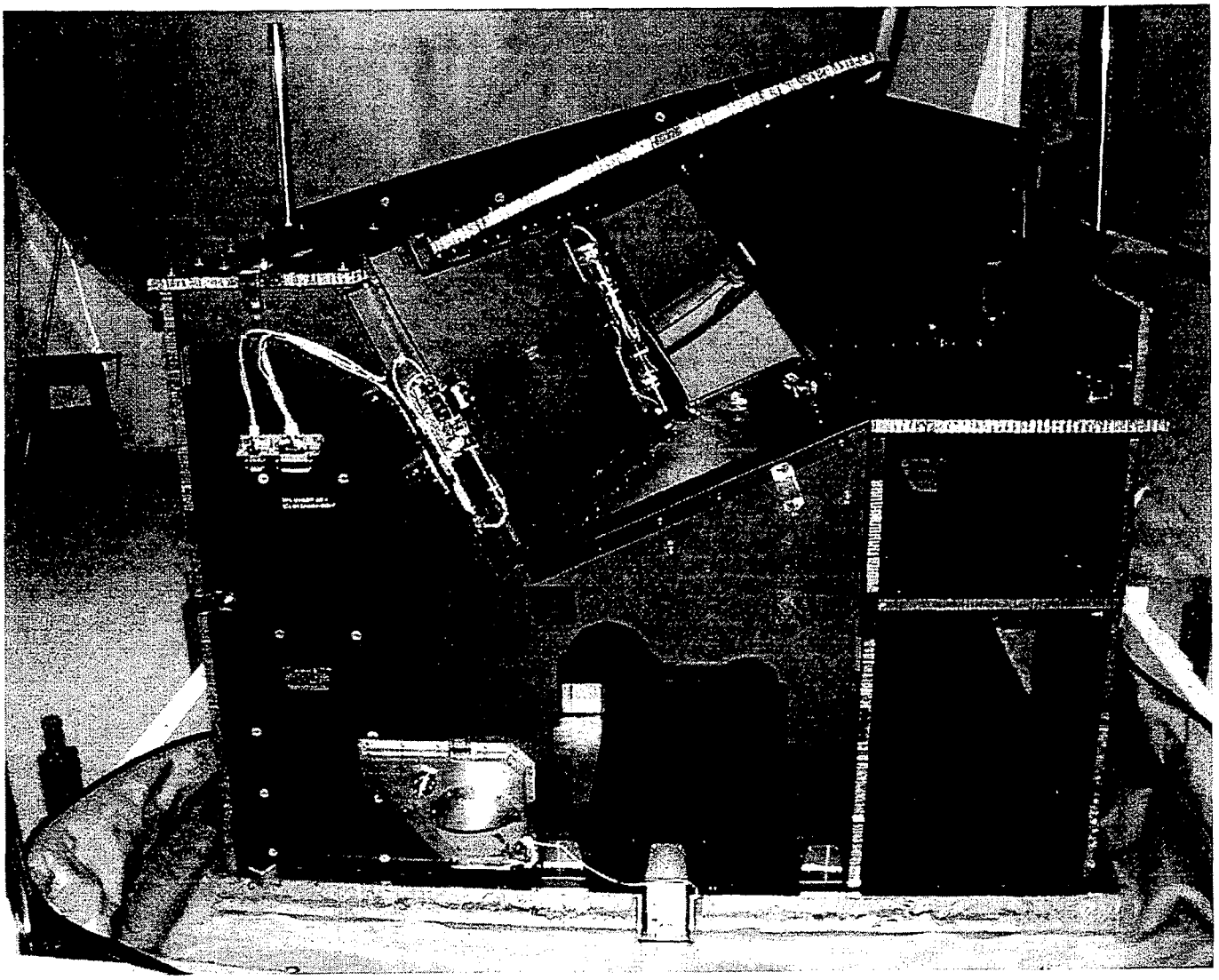

SECURITY CLASSIFICATION: U/C			SHEET 1 OF 1
MATRA MARCONI SPACE UK ENGINEERING CHANGE ORDER	MODEL EMBODIMENT: FM	PROJECT IDENTIFIER: 3164	ECO NUMBER

CLASS: I / II (II)	END ITEM TITLE/IDENTIFIER: HIRDLS STRUCTURE/THERMAL SUBSYSTEM

ECO ORIGINATOR:	RESPONSIBLE ENGINEER:	CHANGE CATEGORY			
NAME: N CROSSLAND DATE: 11/2/00 NC	NAME: N CROSSLAND DATE: 11/2/00 NC	1.	2.	3.	4.

REASON FOR CHANGE	RELATED DOCUMENTS & ECO'S
FIRST ISSUE	

DOC TYPE	DOCUMENT NUMBER	TITLE OF DOCUMENT / DETAILS OF CHANGE	ISSUE FROM	ISSUE TO	USED-ON	DIST 'N
	3164-SU009-COD (TC-MMS-474)	FM SPACE VIEW APERTURE ASSEMBLY DESIGN CERTIFICATION PACK	–	1	SJ001-02-F	

SPECIAL INSTRUCTIONS

DISCIPLINE NAME DATE			
DISCIPLINE NAME DATE			

	NOT INCORPORATE	INCORPORATE EO	INCORPORATED BY:
CCB CHAIRMAN	NAME: DATE:	NAME: IK STEWART DATE: 14/2/00	NAME: N CROSSLAND DATE: 11/2/00
QUALITY ASSURANCE	NAME: DATE:	D.G. Brewster NAME: D.G. BREWSTER DATE: 14/2/00	CONFIG RELEASE NAME: DATE:

SECURITY CLASSIFICATION: U/C	© MATRA MARCONI SPACE UK LTD

HIRDLS

TC-MMS-474
(3164-SV009-COD)
Issue 1

HIGH RESOLUTION DYNAMICS LIMB SOUNDER

Originator: N Crossland

Date: 3 January, 2000

Subject/Title: **FM Space View Aperture Assembly Design Certification Data Pack**

Description/Summary/Contents:

The purpose of this package is to demonstrate :-

1) The completed design meets all specified requirements (subject to any specifically stated exclusions),

2) The completed design meets all product liability requirements,

3) The design process, including results of the design verification, has been adequately documented.

Keywords: FM, Space View Aperture, Design Certification

Purpose of this Document: Design Certification Documentation

Reviewed/Approved by:	IK STEWART		
Date (yy-mm-dd):	00-02-14		

Matra Marconi Space
Anchorage Road
Portsmouth
Hampshire PO3 5PU
England

EOS

FM SPACE VIEW APERTURE (SVA) ASSEMBLY DESIGN CERTIFICATION DATA PACK

TC-MMS-474

Responsible Engineer: N Crossland Date: 11 Feb 2000

Quality Assurance: D. G. Brewster Date: 14/2/00

Project Manager: [illegible] Date: 14/2/00

© MATRA MARCONI SPACE UK LIMITED

THE COPYRIGHT IN THIS DOCUMENT IS THE PROPERTY OF MATRA MARCONI SPACE UK LIMITED. This document is supplied by Matra Marconi Space UK Limited on the express terms that it is to be treated as confidential and that it may not be copied, used or disclosed to others for any purpose except as expressly authorised under the terms of Contract No N2A 3R 0386.

Any person, other than the authorised holder, who finds or otherwise obtains possession of the document, should post it, together with his/her name and address, to the Registry, Matra Marconi Space UK Limited, Anchorage Road, Portsmouth, England, PO3 5PU. Postage will be refunded.

CONTENTS

SECTION

1 Certificate of Conformity

2 Design Certificate (3164-SV002-COD)

3 Functional Configuration Item Data List (CIDL)

4 Statement of Compliance against the STH Subsystem Requirements Specification SP-HIR-050D

5 List of all qualification Test Procedures and associated Test Reports

6 Record of design process (A collated list of Engineering Design Files)

7 List of all Theoretical Analyses

8 Evidence of Interface Control

9 Safety Assessment

10 Evidence of compliance with design review procedures and that all outstanding actions have been completed

SCOPE

The purpose of this package is to demonstrate the following :-

1) The completed design meets all specified requirements (subject to any specifically stated exclusions),

2) The completed design meets all product liability requirements,

3) The design process, including results of the design verification, has been adequately documented.

The Space View Aperture (SVA) is essentially a hole in the STH +Y panel to allow the instrument to have a view to space as its cold reference. The SVA assembly comprises, a movable cover for the hole with associated opening mechanism, and a fixed cover to shield the instrument from stray light and Earth albedo once the movable cover is in the fully open position. Sensors are provided to indicate the status of the cover, i.e. fully open or fully closed.

DISTRIBUTION LIST

INTERNAL	EXTERNAL
I K Stewart	N Morris (RAL)
N Crossland	

CHANGE RECORD

CHANGE NUMBER	CLASS	CHANGE DETAILS	ISSUE
3164-	-	First Issue	1

MATRA MARCONI SPACE UK LIMITED

To:N Morris

Rutherford Appleton Laboratories

Space Science Department

Chilton, Didcot, OXON

OX11 0QX

ANCHORAGE ROAD,
PORTSMOUTH, HAMPSHIRE,
ENGLAND PO3 5PU
Telex: 86666 Fax: (023) 9270 8282
Telephone: Portsmouth (023) 9270 5331

CERTIFICATE OF CONFORMITY

UK Defence Contractor List No. 55700/1/04

SERIAL No: 35965

DAMAGE AND SHORTAGE:
Claims for damage or shortage will not be entertained unless made in writing to ourselves within 3 days of receipt of goods.

NON DELIVERY:
Carriers and ourselves to be advised in writing as follows:
i. Within 3 days from date of dispatch by POST
ii. Within 23 days from date of dispatch by ROAD
iii. Within 14 days from date of dispatch by RAIL

DATE OF DESPATCH	CONTRACT No.	SUBCONTRACT OR ORDER No.	WORKS ORDER No.	MEANS OF DESPATCH	DRN No.
1-02-00	N2A 3R 0386			MMS Transport	

ITEM	FULL DESCRIPTION AND SERIAL No.	DRAWING AND/OR SPEC No.	ISS No.	QTY	BATCH No.	REMARKS
1	Space View Aperture (SVA) Assembly Serial No. FM001	HR2L040	05	1	0182080	Flight hardware delivered to Customer

CERTIFICATION

Certified that the whole of the supplies detailed hereon, unless otherwise stated above, conform in all respects to the specifications, *drawing and contract/order relative thereto.*

(Signed) D. G. Brewster Quality Manager D.G. BREWSTER Date 9/2/00

* ** ***

For and on behalf of MATRA MARCONI SPACE UK LIMITED

NOTES

* This certificate must be signed to be valid

** Delete as appropriate

*** Insert title as appropriate

Security Classification:	UNCLASSIFIED	Sheet 1 of 2 Sheets
MATRA MARCONI SPACE	**DESIGN CERTIFICATE**	Issue: 1 Status: FINAL Cert No: 3164-SV009-COD

ISSUING DIRECTORATE:	Address:
SCIENCE AND RADAR	MATRA-MARCONI SPACE UK LTD ANCHORAGE ROAD PORTSMOUTH PO3 5PU

1. PRODUCT	Part No
FM SPACE VIEW APERTURE ASSEMBLY	HR2L040 ISSUE: 5

2. PURPOSE (Subject to the exceptions and limitations stated below)

Provides a cold reference for the HIRDLS instrument optics and prevents direct sunlight, unwanted solar reflections and earth albedo entering the instrument optics. The SVA comprises a cover and associated opening mechanism, and position sensors.

Matra Marconi Space cannot accept responsibility for satisfactory operation of the product to which this certificate applies outside the scope of this Certificate, without prior written agreement of Matra Marconi Space

3. CUSTOMER REQUIREMENTS

SP-HIR-050 ISSUE: D
SP-HIR-200 ISSUE: G

4. OTHER REQUIREMENTS

NONE

5. REQUIREMENTS RELAXATIONS

NONE

6. DESIGN STANDARD

(SEE SECTION 3)

7. COMPLIANCE WITH CUSTOMER REQUIREMENTS

(SEE SECTION 4)

8. COMPLIANCE WITH LEGISLATIVE REQUIREMENTS

a. **Safety:** (SEE SECTION 9)

b. **Other:** NONE

9. DESIGN RECORDS

SEE SECTIONS 6, 8 AND 10

10. EXCEPTIONS

FOR EASE OF REMOVAL DURING INTEGRATION, THE ALBEDO SHIELD FIXINGS HAVE NOT BEEN LOCKED TO THE SVA BASEPLATE. FIXNGS TO BE LOCKED BY, AND UNDER THE CONTROL OF, THE INSTRUMENT INTEGRATOR PRIOR TO FLIGHT.

11. LIMITATIONS

THE SVA IS A LIMITED LIFE ITEM AND HAS BEEN DESIGNED FOR 110 OPERATIONS INCLUDING A MAXIMUM OF 30 OPERATIONS UNDER VACUUM CONDITIONS (INCLUDES IN-ORBIT). IT IS NOT GUARANTEED TO MEET IT'S PERFORMANCE REQUIREMENTS THEREAFTER.

12. SUPPORTING CERTIFICATES

NONE

Security Classification:	UNCLASSIFIED	Sheet 2 of 2 Sheets
MATRA MARCONI SPACE	**DESIGN CERTIFICATE**	Issue: 1 Status: FINAL Cert No: 3164-SV009-COD

ISSUING DIRECTORATE:	Address:
SCIENCE AND RADAR	MATRA MARCONI SPACE UK LTD ANCHORAGE ROAD PORTSMOUTH PO3 5PU

1. PRODUCT	Part No
FM SPACE VIEW APERTURE ASSEMBLY	HR2L040 ISSUE: 5

13. HAZARDOUS CONTENT	Detailed in
Check one ☐ Yes ☒ No	

14. CERTIFICATION - Approvals signatures

a. The design Standard of the product to which this certificate applies, is defined in Paragraph 6, and complies with the Design Requirements defined in Paragraphs 3 to 5, subject to the exceptions stated in Paragraph 10.

Signed: N Crossland — N CROSSLAND — 11 Feb 2000
Responsible Engineer — Name — Date

Signed: [signature] — I K STEWART — 14/2/00
Project Manager — Name — Date

b. Every reasonable precaution has been taken to ensure the safety of the product and all reasonable steps have been taken to identify any potential hazards as reported in Paragraph 8(a).

Signed: [signature] — 14/2/00
Directorate Engineering Manager — Date

c. To the best of our knowledge and belief, all the information given in this Certificate and its supporting documentation, is correct.

Signed: [signature] — 14/2/00
For Directorate of Technical & Quality; Matra Marconi Space — Date

15. ACCEPTANCE	DRB Reference
	HRDLS - PA - 019

Accepted on behalf of: Rutherford Appleton Laboratory

Signed: N. Morris — N. MORRIS — 16/02/00
Name — Date

Position:

MATRA MARCONI (SPACE) LTD.
ANCHORAGE ROAD
PORTSMOUTH HAMPSHIRE

HIRDLS

F U N C T I O N A L
C O N F I G U R A T I O N I T E M D A T A L I S T

F O R

SPACE VIEW ALBEDO ASSEMBLY - FM

3164-SV010-LIE
TC-MMS-480

SECTION 1 CONTROL DOCUMENTATION

TITLE	NUMBER	AS DESIGN
SPACE VIEW ALBEDO ASSEMBLY	HR2L040	2
SUNSHIELD SUBSYSTEM SPECIFICATION	3164-SA001-SPY	D
SPACE VIEW APERTURE ASSY (FM) DRG TR	3164-SV001-21-F	2
SPACE VIEW ALBEDO ASSEMBLY ICD	3164-SV001-25-0	1

DATA LIST STATUS LOG — THIS LIST COMPRISES THE FOLLOWING SECTIONS AT ISSUE SHOWN

ISSUE	1	N/A	1	1	1	N/A	TOTALS
SECTION	1	2	3	4	5	6	5
SHEETS	1	N/A	2	1	1	N/A	

CONFIGURATION CONTROL							
PRODUCT ASSURANCE							
PROJECT MANAGER							
CUSTOMER							
ISSUE	1						
CCB DATE	9·2·00						

PROJECT HIRDLS : SHEET 1 OF 5 : NUMBER 3164-SV010-LIE

Issue : 1

Section : 3

Parent Item : HR2L040 Parent ECL : 05
Description : SPACE VIEW ALBEDO ASSEMBLY ECO : 3164-00324

Level	Component No / Description	Engineering ECL From	To	Using ECO	Reason for Change
1	HR2L004 MOTOR ASSEMBLY	01		HRAB0001	INITIAL ISSUE
.2	GM1S422 MOTOR HOUSING	02		GMAA0161	PO-CP-MMB-GM0036/023
.2	GM1S252 END BEARING CAP	01		GMAA0097	INITIAL ISSUE
.2	GM1S253 MOTOR SHAFT	02		GMAA0145	PO-CP-MMB-GM-0036/19
.2	GM1S254 BEARING RETAINER	01		GMAA0097	INITIAL ISSUE
.2	GM1S255 SPACER	01		GMAA0097	INITIAL ISSUE
.2	GM1S256 BEARING RETAINER	01		GMAA0097	INITIAL ISSUE
.2	GM1S257 MOTOR HOUSING	02		GMAA0116	PO-CP-MMB-GM-0036/07
.2	GM1S258 SPECIAL WASHER	01		GMAA0097	INITIAL ISSUE
.2	GM1S451 SHIM PACK .002" MOTOR ASSEMBLY	01		GMAA0153	INTIAL ISSUE
.2	HR2L005 DUST CAP (MOTOR)	01		HRAB0001	INITIAL ISSUE
1	HR2L008 +Y PANEL MOUNTING PANEL	04		3164-00252	UPDATE FOR FLIGHT
1	HR2L034 COVER (PAINTING DRG)	02		3164-00266	REFLECTIVE CHANGE
.2	HR2L009 COVER	03		3164-00252	UPDATE FOR FLIGHT
1	HR2L010 MOUNTING BRACKET (MICROSWITCH)	01		HRAB0002	INITIAL ISSUE
1	HR2L011 MOUNTING BRACKET	01		HRAB0002	INITIAL ISSUE
1	HR2L012 MOUNTING BRACKET	01		HRAB0002	INITIAL ISSUE
1	HR2L013 MOUNTING BRACKET	01		HRAB0003	INITIAL ISSUE
1	HR2L014 SCREW STOP	02		3164-00252	UPDATE FOR FLIGHT
1	HR2L015 MOUNTING BRACKET	01		HRAB0003	INITIAL ISSUE
1	HR2L016 MOUNTING FLANGE	03		3164-00252	UPDATE FOR FLIGHT
1	HR2L017 INTERFACE	1		HRAB0004	INITIAL ISSUE (BRISTOL FOURMAN ITEM)

Issue : 1

Section : 3

Parent Item : HR2L040 Parent ECL : 05
Description : SPACE VIEW ALBEDO ASSEMBLY ECO : 3164-00324

Level	Component No / Description	Engineering ECL From	To	Using ECO	Reason for Change
1	HR2L018 SCREW SPECIAL	1		HRAB0004	INITIAL ISSUE (BRISTOL FOURMAN ITEM)
1	HR2L019 STOP	1		HRAB0004	INITIAL ISSUE (BRISTOL FOURMAN ITEM)
1	HR2L021 SLEEVE	1		HRAB0005	INITIAL ISSUE (BRISTOL FOURMAN ITEM)
1	HR2L022 SPIGOT	1		HRAB0005	INITIAL ISSUE (BRISTOL FOURMAN ITEM)
1	HR2L023 HOUSING	3		HRAB0020	MOD TO INCLUDE COVER STOP (BRISTOL FOURMAN ITEM)
1	HR2L024 GUIDE	2		3164-00252	UPDATE FOR FLIGHT
1	3164-SV007-20 COVER STOP	01		3164-00255	FIRST ISSUE
1	HR2L056 TORSION SPRING	01		HRAA0048	INITIAL ISSUE
1	HR2L057 HOUSING TORSION SPRING	02		3164-00252	UPDATE FOR FLIGHT
1	3164-SV006-20 SPRING SUPPORT HOUSING	02		3164-00295	REMOVE POSSIBLE FOULING
1	HR2L058 STOP SPRING	02		3164-00321	COVER NOT HELD CLOSED
1	HR2L025 BRACKET (CONNECTOR)	03		3164-00252	UPDATE FOR FLIGHT
1	HR2L035 MOUNTING BRACKET	03		3164-00252	UPDATE FOR FLIGHT
1	HR2L036 ALBEDO SHIELD	02		HRAB0015	MATERIAL SPEC ADDED
1	HR2L027 SHIM	1		HRAB0011	INITIAL ISSUE (BRISTOL FOURMAN ITEM)
1	HR2L028 SPECIAL BUSH	01		HRAB0019	INITIAL ISSUE
1	HR2L029 SHIM PACK (SPECIAL BUSH)	01		HRAB0019	INITIAL ISSUE
1	GM1S424 ADAPTOR PLATE	01		GMAA0142	PO-CP-MMB-GM-0036/17
1	HR2L031 BOLT SPECIAL	1		HRAB0022	FIRST ISSUE
1	HR2L032 WASHER BRACKET SPECIAL	1		HRAB0022	FIRST ISSUE
1	HR2L033 SPACER	1		HRAB0022	FIRST ISSUE

Issue : 1
Section : 4 TOOL PROCESSING DOCUMENTATION

Parent Item : HR2L040
Description : SPACE VIEW ALBEDO ASSEMBLY

Parent ECL : 05
ECO : 3164-00324

List No.	MMS Document Number	External Document Number	Design Issue	Document Title
1	TAA2123		1	SEAL LOCATION TOOL
2	TAA2124		1	ASSEMBLY FIXTURE (VIBRATION)
3	TAA2125		1	LATCH RETAINER ASSEMBLY
4	TAA2126		1	LOCATION PLUG (ALBEDO SHIELD)
5	TAA2127		1	SVA ASSEMBLY FIXTURE
6	TAA2128		1	THERMAL VAC AND ASSEMBLY FIXTURE

Issue : 1

Section : 5 DESIGN REVIEW DOCUMENTATION

Parent Item : HR2L040 Parent ECL :04
Description : SPACE VIEW ALBEDO ASSEMBLY ECO :3164-00324

List No.	MMS Document Number	Ext Document Number	Design Issue	Document Title
1	3164-11005-LIZ	PA-MMS-317	1	MISSION ASSURANCE REQUIREMENTS COMPLIANCE MATRIX
2	3164-11005-TNO	PA-MMS-096	1	PA REQUIREMENTS COMPLIANCE MATRIX
3	3164-11007-TNO	PA-MMS-453	1	STH, SSH AND SVA RISK REGISTER
4	3164-12001-PLC	SP-MMS-073	A	CADM PLAN
5	3164-18002-LIM	PL-MMS-211	2	DECLARED MATERIALS LIST
6	3164-18003-LIS	PL-MMS-212	2	DECLARED PROCESSES LIST
7	3164-SA010-SME	SW-MMS-358	A	INSTRUMENT FIELD OF VIEW
8	3164-SA028-TPF	TP-MMS-451	3	SPACE VIEW APERTURE ASSEMBLY FM TEST PROCEDURE
9	3164-SS001-DAI	DW-MMS-449	1	FM STH SUBSYSTEM ASSEMBLY INSTRUCTION
10	3164-SS003-ANA	PA-MMS-210	E	STH AND SSH FMECA
11	3164-SS004-ANR	PA-MMS-209	E	STH AND SSH RELIABILITY PREDICTION
12	3164-SS055-PLT	TP-MMS-248	C	STH, SSH AND SVA DESIGN DEVELOPMENT AND TEST PLAN
13	3164-SS067-RPZ	TC-MMS-381	A	INSTRUMENT THERMAL ANALYSIS REPORT
14	3164-SS069-ANH	PA-MMS-386	A	HAZARD ANALYSIS REPORT MMS SUPPLIED SUBSYSTEMS
15	3164-SS070-PLP	PA-MMS-387	A	MMS SUBSYSTEMS CLEANLINESS AND CONTAMINATION CONTROL PLAN
16	3164-SS073-TNO	TC-MMS-399	1	INSTRUMENT FM CONFIGURATION AND INTEGRATION PLAN
17	3164-SS075-ANZ	TC-MMS-206	H	STH AND SSH SUBSYSTEM MASS ESTIMATE
18	3164-SS090-MAI	SP-MMS-455	2	FM STRUCTURE/THERMAL SUBSYSTEM ASSEMBLY AND DISASSEMBLY HANDBOOK
19	3164-SS091-TNO	TC-MMS-454	1	FM STH/SSH/SVA VENTING
20	3164-SV001-DAI	DW-MMS-389	2	SVA ASSEMBLY PROCEDURE
21	3164-SV004-DPE	TC-MMS-438	A	EM SPACE VIEW APERTURE ASSEMBLY END ITEM DATA PACKAGE
22	3164-SV012-TRF	TR-MMS-485	1	FM SVA VIBRATION TEST REPORT
23	3164-SV013-TRF	TR-MMS-486	1	FM SVA THERMAL VACUUM & FUNCTIONAL TEST REPORT
24	SP-MMS-355	SP-MMS-355	1	PROCUREMENT SPEC SVA GEARHEAD DRIVE
25	SP-MMS-356	SP-MMS-356	1	PROCUREMENT SPEC FOR FRAMELESS BRUSHED DC MOTOR
26	SP-MMS-357	SP-MMS-357	1	PROCUREMENT SPEC FOR POTENTIOMETER
27	TC-MMS-384	TC-MMS-384	1	SSH AND SVA DESIGN ANALYSIS REPORT

A PROJECT GUIDE

STRUCTURE THERMAL SUBSYSTEM (STH) & SUNSHIELD SUBSYSTEM (SSH / SVA)

VERIFICATION REFERENCE SUMMARY

Compiled: 20 JAN 2000

Project Manager: I K Stewart Date: 20 January, 2000

© MATRA MARCONI SPACE UK LIMITED

THE COPYRIGHT IN THIS DOCUMENT IS THE PROPERTY OF MATRA MARCONI SPACE UK LIMITED. This document is supplied by Matra Marconi Space UK Limited on the express terms that it is to be treated as confidential and that it may not be copied, used or disclosed to others for any purpose except as expressly authorised under the terms of Contract No N2A 3R 0386.

Any person, other than the authorised holder, who finds or otherwise obtains possession of the document, should post it, together with his/her name and address, to the Registry, Matra Marconi Space UK Limited, Anchorage Road, Portsmouth, England, PO3 5PU.
Postage will be refunded.

CONTENTS

SUMMARY 2

SP-HIR-031E VERIFICATION CROSS REFERENCE MATRIX.....3

SP-HIR-050D VERIFICATION CROSS REFERENCE MATRIX 13

STH / SSH / SVA Test Summary Matrix.....23

SUMMARY

The STH requirements document is SP-HIR-031 Issue E.
The SSH / SVA requirements document is SP-HIR-050 Issue D

Document sources are either from EIDP or from reports filed with Rutherford Appleton Laboratory.
Documents listed and their issue are for guidance only. The issue number relevant to the Structure build should always be checked with the EIDP that accompanies the particular structure.

End Item Data Packs Summary		
Engineering Model EM / Qualification		
STH EIDP	**SSH EIDP**	**SVA EIDP**
TC-MMS-442	TC-MMS-420	TC-MMS-438
These packs were delivered in May 1999 to RAL / LMMS / NASA(GSFC). Due to their nature with assembly records they are only available in paper format.		
Flight Model FM / Acceptance		
SVA EIDP	**SVA EIDP**	**SVA EIDP**
TC-MMS-463	TC-MMS-464	TC-MMS-465
MLI EIDP		
TC-MMS-466		
These packs will be made available end Jan 00 for review.		

SP-HIR-031E VERIFICATION CROSS REFERENCE MATRIX

EM / Qualification (Reviewed in Feb 1999) Reference Table Follows:

SECTION	SP-HIR-031E REQUIREMENT	EM (Qualification)		Compliant	Document or Drawing		
					Ref.	Title/Comments	Comment
3.	Requirements	-		-	-	-	-
3.1	Mechanical	I		✓	DW-MMS-254D DW-MMS-265E	Structure/Thermal Subsystem ICD drawing Instrument Footprint drawing	Reviewed 99
3.1.1	Physical Characteristics	-		-	-	-	-
3.1.1.1	Mass Limits	I		✓	TC-MMS-206F	STH/SSH Subsystem Mass Report	Reviewed 99
3.1.1.2	Dimensional Limits	I		✓	DW-MMS-254D DW-MMS-265E	Structure/Thermal Subsystem ICD drawing Instrument Footprint drawing Mechanical Interfaces compliant with Draft #2 of D26477	Reviewed 99
3.1.1.3	Centre of Gravity	I		✓	DW-MMS-254D	Structure/Thermal Subsystem ICD drawing . Moments of Inertia extracted from Nastran model	Reviewed 99
3.1.1.4	Moments of Inertia	A		✓	DW-MMS-254D	Structure/Thermal Subsystem ICD drawing . Moments of Inertia extracted from Nastran model	Reviewed 99
3.1.1.5	Venting Provisions	I		✓	TC-MMS-371A	HIRDLS EM STH/SSH/SVA Venting	Reviewed 99
3.1.1.6	Cleanliness	I/T			PA-MMS-387A	MMS Subsystems Cleanliness and Contamination Control Plan	Reviewed 99
3.1.2	Mechanical Interfaces	I		✓	DW-MMS-254D TC-MMS-330A TC-MMS-339A	Structure/Thermal Subsystem ICD drawing HIRDLS STH/Unit Interface Definition EM STH Structural Analysis Summary	Reviewed 99
3.1.3	Mechanical Performance	A/T		✓	TC-MMS-339A	EM STH Structural Analysis Summary	Reviewed 99

SECTION	SP-HIR-031E REQUIREMENT	EM (Qualification)		Compliant	Document or Drawing		
					Ref.	Title/Comments	Comment
3.1.3.1	Alignment	I/T		×	DW-MMS-254D	Structure/Thermal Subsystem ICD drawing. EM non compliant on alignment and orthogonality. IAC rotated 45° ± 0,1° to IRCF as per TRW requirement and IAC surface orthogonality 90° ± 15 arc seconds. To be reviewed for the flight model.	Reviewed 99
3.1.3..2	Stability					Requirement TBD	
3.1.4	Mechanical Design	-		-	-	-	-
3.1.4.1	Material Properties and Allowables	I		✓	PL-MMS-211 PL-MMS-212 TC-MMS-339A	Declared Materials List Declared Processes List EM STH Structural Analysis Summary	Reviewed 99
3.1.4.2	Load Distribution	A		✓	TC-MMS-339A	EM STH Structural Analysis Summary	Reviewed 99
3.1.4.3	Strength Requirements	A		✓	TC-MMS-339A	EM STH Structural Analysis Summary	Reviewed 99
3.1.4.4	Stiffness Requirements	A		✓	TC-MMS-339A TR-MMS-423	EM STH Structural Analysis Summary EM STH Vibration Test Report	Reviewed 99
3.1.4.5	Thermal Stresses	A		×	TC-MMS-339A	EM STH Structural Analysis Summary. Compliance statement included in analysis document. Thermoelastic analysis not evaluated and is to be reviewed post instrument temperature field definition.	Reviewed 99
3.1.4.6	Lifting Points	I		✓	DW-MMS-254D DW-MMS-265E	Structure/Thermal Subsystem ICD drawing Instrument Footprint drawing	Reviewed 99
3.1.4.7	Integration Requirements	I		✓	SP-MMS-396A	EM Structure Assembly and Disassembly Manual	Reviewed 99
3.2	Thermal			✓	TC-MMS-381A	HIRDLS Instrument Thermal Analysis Report	Reviewed 99
3.2.1	Thermal Interfaces			✓	TC-MMS-381A	HIRDLS Instrument Thermal Analysis Report Thermal ICD to be produced for the flight model.	Reviewed 99
3.2.2	Thermal Performance			✓	TC-MMS-381A	HIRDLS Instrument Thermal Analysis Report	Reviewed 99
3.2.2.1	Multilayer Insulation			✓	TC-MMS-401A	Multilayer Insulation Design Description	Reviewed 99
3.2.2.1.1	MLI Mechanical Requirements			✓	TC-MMS-401A	Multilayer Insulation Design Description	Reviewed 99
3.2.2.2	Heat Leakage to the Spacecraft			✓	TC-MMS-381A	HIRDLS Instrument Thermal Analysis Report	Reviewed 99
3.2.2.3	Solar Exclusion Performance			✓	DW-MMS-254D	Structure/Thermal Subsystem ICD drawing	Reviewed 99
3.2.3	Thermal Design	-		-	-	-	-
3.2.3.1	Thermal Design Margins			✓	TC-MMS-381A	HIRDLS Instrument Thermal Analysis Report	Reviewed 99

SECTION	SP-HIR-031E REQUIREMENT	EM (Qualification)		Compliant	Document or Drawing		
					Ref.	Title/Comments	Comment
3.2.3.2	Thermal Control Techniques					No requirements for the EM model. Flight model to be reviewed.	
3.2.3.3	Thermal Design Techniques			✓	TC-MMS-381A TC-MMS-401A	HIRDLS Instrument Thermal Analysis Report Multilayer Insulation Design Description	Reviewed 99
3.2.3.4	Thermal Dissipations			✓	DW-MMS-254D	Structure/Thermal Subsystem ICD drawing	Reviewed 99
3.2.3.5	Control of Thermal Finishes			✓	TC-MMS-381A TC-MMS-401A	HIRDLS Instrument Thermal Analysis Report Multilayer Insulation Design Description	Reviewed 99
3.3	Electrical	-		-	-	-	-
3.3.1	Electrical Interfaces	I/T		✓	DW-MMS-254D	Structure/Thermal Subsystem ICD drawing	Reviewed 99
3.3.1.1	Power Consumption					EM model has no power requirements. However, will be revisited if heaters are required for the flight model.	
3.3.1.2	Heaters					No heaters required for EM model. However, will be revisited if heaters are required for the flight model.	
3.3.1.3	Connectors					No connectors required on the EM model. Requirement will be revisited if heaters are required for the flight model.	
3.3.1.4	Parts Stress					Not applicable to the STH subsystem	
3.3.1.5	Grounding and Bonding	A/T		✓	DW-MMS-254D TC-MMS-401A	Structure/Thermal Subsystem ICD drawing Multilayer Insulation Design Description	Reviewed 99
3.3.2	Electromagnetic Compatibility (EMC)					Not applicable to the STH subsystem	
3.3.2.1	Magnetic Requirements					Not applicable to the STH subsystem	
3.3.3	Electrostatic Discharge	I/T		✓	DW-MMS-254D TC-MMS-401A	Structure/Thermal Subsystem ICD drawing Multilayer Insulation Design Description	Reviewed 99
3.4	Environmental Conditions	-		-	-	-	-
3.4.1	Ground Operation Environment	A		✓	TC-MMS-339A	EM STH Structural Analysis Summary. Dynamic requirements enveloped by design limit loads.	Reviewed 99
3.4.1.1	Linear Acceleration	A		✓	TC-MMS-339A	EM STH Structural Analysis Summary. Dynamic requirements enveloped by design limit loads.	Reviewed 99
3.4.1.2	Climatic Conditions	I		✓	PA-MMS-387A	MMS Subsystems Cleanliness and Contamination Control Plan	Reviewed 99
3.4.1.3	Vibration During Transport					Not applicable. Refer to RAL transit container requirements.	

SECTION	SP-HIR-031E REQUIREMENT	EM (Qualification)		Compliant	Document or Drawing		
					Ref.	Title/Comments	Comment
3.4.2	Launch/Ascent Phase	A/T		✓	TC-MMS-371A TC-MMS-401A TC-MMS-339A	HIRDLS EM STH/SSH/SVA Venting Multilayer Insulation Design Description EM STH Structural Analysis Summary. Dynamic requirements enveloped by design limit loads.	Reviewed 99
3.4.2.1	Pressure Profile (Depressurisation)	A		✓	TC-MMS-371A TC-MMS-401A	HIRDLS EM STH/SSH/SVA Venting Multilayer Insulation Design Description	Reviewed 99
3.4.3	Orbit Phase	A		✓	TC-MMS-371A TC-MMS-381A TC-MMS-401A PL-MMS-211 TC-MMS-339A	HIRDLS EM STH/SSH/SVA Venting HIRDLS Instrument Thermal Analysis Report Multilayer Insulation Design Description Declared Materials List EM STH Structural Analysis Summary. Dynamic requirements enveloped by design limit loads.	Reviewed 99
3.4.4	Nominal Mission and Storage	A		✓	PL-MMS-211 PL-MMS-212	Declared Materials List Declared Processes List	Reviewed 99
3.5	Operability	-		-	-	-	-
3.5.1	Reliability	A		✓	PA-MMS-209A	STH and SSH Reliability Prediction	Reviewed 99
3.5.2	Single Point Failures	I		✓	PA-MMS-210A	STH and SSH Failure Modes, Effects and Criticality Analysis.	Reviewed 99
3.5.3	Transportability	I/D		✓	DW-MMS-254D	Structure/Thermal Subsystem ICD drawing	Reviewed 99
3.5.4	Maintainability	I		✓	DW-MMS-254D	Structure/Thermal Subsystem ICD drawing	Reviewed 99
3.5.5	Spares	I		✓	DW-MMS-254D	Structure/Thermal Subsystem ICD drawing. Spares requirements will be defined for the flight model.	Reviewed 99
3.5.6	Safety	A/I		✓	PA-MMS-386A	Hazard Analysis Report for MMS Supplied Subsystems.	Reviewed 99
3.5.6.1	Fire (Flammability) Control	A		✓	PA-MMS-386A	Hazard Analysis Report for MMS Supplied Subsystems.	Reviewed 99
3.5.6.2	Hazard Control	I		✓	PL-MMS-211 PL-MMS-212	Declared Materials List Declared Processes List	Reviewed 99
3.5.6.3	Hazard Labelling	I		✓	PA-MMS-386A	Hazard Analysis Report for MMS Supplied Subsystems.	Reviewed 99
3.6	Design and Construction	-		-	-	-	-
3.6.1	Documents and Standards	I		✓	PM-HIR-004E	Configuration Management Plan for the HIRDLS Instrument Programme.	Reviewed 99
3.6.1.1	Engineering Standards	I		✓	PL-MMS-212	Declared Processes List	Reviewed 99
3.6.1.2	Selection of Specifications and Standards	I		✓	PA-MMS-317	Mission Assurance Requirements Compliance Matrix	Reviewed 99

SECTION	SP-HIR-031E REQUIREMENT	EM (Qualification)		Compliant	Document or Drawing		
					Ref.	Title/Comments	Comment
3.6.2	Parts, Materials and Processes	-		-	-	-	-
3.6.2.1	Parts	I		✓	TC-MMS-383B	STH/SSH/SVA Declared Parts List	Reviewed 99
3.6.2.2	Materials	I		✓	PL-MMS-211	Declared Materials List	Reviewed 99
3.6.2.3	Processes	I		✓	PL-MMS-212	Declared Processes List	Reviewed 99
3.6.3	Standard and Commercial Parts	I		✓		No EEE, Hi-Rel, Commercial or Non-Standard parts are used in the construction of the EM STH Subsystem . However, the requirements may be revisited for the Flight model .	
3.6.4	Moisture and Fungus Resistance	I		✓	PL-MMS-211	Declared Materials List	Reviewed 99
3.6.5	Corrosion Prevention and Control	I		✓	PL-MMS-211	Declared Materials List	Reviewed 99
3.6.5.1	Corrosion Resistance	I		✓	PL-MMS-211	Declared Materials List	Reviewed 99
3.6.5.2	Dissimilar Metals	I		✓	PL-MMS-211	Declared Materials List	Reviewed 99
3.6.5.3	Corrosive Fumes	D		✓	PL-MMS-211	Declared Materials List	Reviewed 99
3.6.5.4	Protective Treatment	D		✓	PL-MMS-211	Declared Materials List	Reviewed 99
3.6.5.5	Coatings and Adhesives	D		✓	PL-MMS-211 TC-MMS-339A	Declared Materials List EM STH Structural Analysis Summary.	Reviewed 99
3.6.5.6	Finish	D		✓	PL-MMS-211	Declared Materials List	Reviewed 99
3.6.6	Interchangeability and Replaceability	I		×		Not applicable to STH.	
3.6.7	Workmanship	I		✓	-	Inspections detailed in Manufacturing History Record Cards	Reviewed 99
3.6.8	Identification and Marking	I		✓	DW-MMS-254D PL-MMS-211	Structure/Thermal Subsystem ICD drawing Declared Materials List	Reviewed 99

Notes:- **Design / Qualification Verification covered fully in EM QUALIFICATION End Item Data Packs – TC-MMS-442 for STH Qualification Reports**

SP-HIR-031E VERIFICATION CROSS REFERENCE MATRIX

FM / Acceptance (Reviewed in Feb 1999) Reference Table Follows:

SECTION	SP-HIR-031E REQUIREMENT		FM (Acceptance)	Compliant Also see EM (Qual)	Document or Drawing		
					Ref.	Title/Comments	Comment
3.	Requirements		-	-	-	-	-
3.1	Mechanical		I	✓	DW-MMS-254(1) DW-MMS-265(1)	Structure/Thermal Subsystem ICD drawing Instrument Footprint drawing	
3.1.1	Physical Characteristics		-	-	-	-	-
3.1.1.1	Mass Limits		I	✓	TC-MMS-206H DW-MMS-254(1)	STH/SSH Subsystem Mass Report STH ICD Drawing	
3.1.1.2	Dimensional Limits		I	✓	DW-MMS-254(1) DW-MMS-265(1)	Structure/Thermal Subsystem ICD drawing Instrument Footprint drawing	
3.1.1.3	Centre of Gravity		I	✓	DW-MMS-254(1)	Structure/Thermal Subsystem ICD drawing	
3.1.1.4	Moments of Inertia		A	✓	DW-MMS-254(1)	Structure/Thermal Subsystem ICD drawing . Moments of Inertia extracted from Nastran model	
3.1.1.5	Venting Provisions		I/A	✓	TC-MMS-454(1)	HIRDLS FM STH/SSH/SVA Venting	
3.1.1.6	Cleanliness		I/T	✓	PA-MMS-387A TC-MMS-470(1)	MMS Subsystems Cleanliness and Contamination Control Plan Bakeout	Reviewed 99
3.1.2	Mechanical Interfaces		I	✓	DW-MMS-254(1) TC-MMS-339A	Structure/Thermal Subsystem ICD drawing EM STH Structural Analysis Summary	Reviewed 99
3.1.3	Mechanical Performance		A/T	✓	TC-MMS-339A	EM STH Structural Analysis Summary	Reviewed 99
3.1.3.1	Alignment		I/T	✓	DW-MMS-254(1)	Structure/Thermal Subsystem ICD drawing.	
3.1.3.2	Stability					Not Applicable	

SECTION	SP-HIR-031E REQUIREMENT		FM (Acceptance)	Compliant Also see EM (Qual)	Document or Drawing Ref.	Title/Comments	Comment
3.1.4	Mechanical Design		-	-	-	-	-
3.1.4.1	Material Properties and Allowables		I	✓	PL-MMS-211(2) PL-MMS-212(2) TC-MMS-339A	Declared Materials List Declared Processes List EM STH Structural Analysis Summary	Reviewed 99
3.1.4.2	Load Distribution		A	✓	TC-MMS-339A	EM STH Structural Analysis Summary	Reviewed 99
3.1.4.3	Strength Requirements		A	✓	TC-MMS-339A	EM STH Structural Analysis Summary	Reviewed 99
3.1.4.4	Stiffness Requirements		A	✓	TC-MMS-339A TR-MMS-461	EM STH Structural Analysis Summary FM STH Vibration Test	Reviewed 99
3.1.4.5	Thermal Stresses		A	Awaiting LMMS Temps	TC-MMS-339A	EM STH Structural Analysis Summary. Thermoelastic analysis not fully evaluated but minimised by design (balanced skins/Ti Feet). 80 degree delta examined.	Reviewed 99 LMMS analysis TBD
3.1.4.6	Lifting Points		I	✓	DW-MMS-254(1) DW-MMS-265(1)	Structure/Thermal Subsystem ICD drawing Instrument Footprint drawing	
3.1.4.7	Integration Requirements		I	✓	SP-MMS-455(2)	FM Structure Assembly and Disassembly Manual	
3.2	Thermal		A	✓	TC-MMS-381A	HIRDLS Instrument Thermal Analysis Report	Reviewed 99
3.2.1	Thermal Interfaces		I	✓	TC-MMS-381A DW-MMS-213	HIRDLS Instrument Thermal Analysis Report Thermal ICD 3164-TH001.	Reviewed 99
3.2.2	Thermal Performance		A	✓	TC-MMS-381A	HIRDLS Instrument Thermal Analysis Report	Reviewed 99
3.2.2.1	Multilayer Insulation		I	✓	TC-MMS-401(2)	Multilayer Insulation Design Description	
3.2.2.1.1	MLI Mechanical Requirements		I	✓	TC-MMS-401(2) DW-MMS-213	Multilayer Insulation Design Description Thermal ICD 3164-TH001 / TH005	
3.2.2.2	Heat Leakage to the Spacecraft		A	✓	TC-MMS-381A	HIRDLS Instrument Thermal Analysis Report	Reviewed 99
3.2.2.3	Solar Exclusion Performance		A	✓	DW-MMS-254(1)	Structure/Thermal Subsystem ICD drawing	
3.2.3	Thermal Design		-	-	-	-	-
3.2.3.1	Thermal Design Margins		A	✓	TC-MMS-381A	HIRDLS Instrument Thermal Analysis Report	Reviewed 99
3.2.3.2	Thermal Control Techniques		A	-		No requirements for the FM model. Passive control	
3.2.3.3	Thermal Design Techniques		I	✓	TC-MMS-381A TC-MMS-401(2)	HIRDLS Instrument Thermal Analysis Report Multilayer Insulation Design Description	Reviewed 99
3.2.3.4	Thermal Dissipations		I	✓	DW-MMS-254(1)	Structure/Thermal Subsystem ICD drawing	

SECTION	SP-HIR-031E REQUIREMENT		FM (Acceptance)	Compliant Also see EM (Qual)	Document or Drawing Ref.	Title/Comments	Comment
3.2.3.5	Control of Thermal Finishes		I	✓	TC-MMS-381A TC-MMS-401(2)	HIRDLS Instrument Thermal Analysis Report Multilayer Insulation Design Description	Reviewed 99
3.3	Electrical		-	-	-	-	-
3.3.1	Electrical Interfaces		I/T	✓	DW-MMS-254(1)	Structure/Thermal Subsystem ICD drawing	
3.3.1.1	Power Consumption		A/T	-		FM model has no power requirements.	
3.3.1.2	Heaters		A/T	-		No heaters required for FM model.	
3.3.1.3	Connectors		I	-		No connectors required on the FM model.	
3.3.1.4	Parts Stress			-		Not applicable to the STH subsystem	
3.3.1.5	Grounding and Bonding		A/T	✓	DW-MMS-254(1) TC-MMS-401(2)	Structure/Thermal Subsystem ICD drawing Multilayer Insulation Design Description	
3.3.2	Electromagnetic Compatibility (EMC)			-		Not applicable to the STH subsystem	
3.3.2.1	Magnetic Requirements			-		Not applicable to the STH subsystem	
3.3.3	Electrostatic Discharge		I/T	✓	DW-MMS-254(1) TC-MMS-401(2)	Structure/Thermal Subsystem ICD drawing Multilayer Insulation Design Description	
3.4	Environmental Conditions (Ground)		-	-	-	-	-
3.4.1	Ground Operation Environment		A	✓	TC-MMS-339A	EM STH Structural Analysis Summary. Dynamic requirements enveloped by design limit loads.	Reviewed 99
3.4.1.1	Linear Acceleration		A	✓	TC-MMS-339A	EM STH Structural Analysis Summary. Dynamic requirements enveloped by design limit loads.	Reviewed 99
3.4.1.2	Climatic Conditions		I	✓	PA-MMS-387A	MMS Subsystems Cleanliness and Contamination Control Plan. RAL Transport Container Design	Reviewed 99
3.4.1.3	Vibration During Transport					Not applicable. (Enveloped by Vibration test) Refer to RAL transit container requirements.	
3.4.2	Launch/Ascent Phase		A/T	✓	TC-MMS-454(1) TC-MMS-401(2) TC-MMS-339A	HIRDLS FM STH/SSH/SVA Venting Multilayer Insulation Design Description EM STH Structural Analysis Summary. Dynamic requirements enveloped by design limit loads.	Reviewed 99
3.4.2.1	Pressure Profile (Depressurisation)		A	✓	TC-MMS-454(1) TC-MMS-401(2)	HIRDLS FM STH/SSH/SVA Venting Multilayer Insulation Design Description	

SECTION	SP-HIR-031E REQUIREMENT		FM (Acceptance)	Compliant Also see EM (Qual)	Document or Drawing		
					Ref.	Title/Comments	Comment
3.4.3	Orbit Phase		A	✓	TC-MMS-381A TC-MMS-401(2) PL-MMS-211(2) TC-MMS-339A	HIRDLS Instrument Thermal Analysis Report Multilayer Insulation Design Description Declared Materials List EM STH Structural Analysis Summary. Dynamic requirements enveloped by design limit loads.	Reviewed 99 Reviewed 99
3.4.4	Nominal Mission and Storage		A	✓	PL-MMS-211(2) PL-MMS-212(2)	Declared Materials List Declared Processes List	
3.5	Operability		-	-	-	-	-
3.5.1	Reliability		A	✓	PA-MMS-209A	STH and SSH Reliability Prediction	Reviewed 99
3.5.2	Single Point Failures		I	✓	PA-MMS-210A	STH and SSH Failure Modes, Effects and Criticality Analysis.	Reviewed 99
3.5.3	Transportability		I/D	✓	DW-MMS-254(1)	Structure/Thermal Subsystem ICD drawing	
3.5.4	Maintainability		I	✓	DW-MMS-254(1)	Structure/Thermal Subsystem ICD drawing	
3.5.5	Spares		I	✓	DW-MMS-254(1)	Structure/Thermal Subsystem ICD drawing. Spares requirements will be defined for the flight model.	
3.5.6	Safety		A/I	✓	PA-MMS-386A	Hazard Analysis Report for MMS Supplied Subsystems.	Reviewed 99
3.5.6.1	Fire (Flammability) Control		A	✓	PA-MMS-386A	Hazard Analysis Report for MMS Supplied Subsystems.	Reviewed 99
3.5.6.2	Hazard Control		I	✓	PL-MMS-211(2) PL-MMS-212(2)	Declared Materials List Declared Processes List	
3.5.6.3	Hazard Labelling		I	✓	PA-MMS-386A	Hazard Analysis Report for MMS Supplied Subsystems.	Reviewed 99
3.6	Design and Construction		-	-	-	-	-
3.6.1	Documents and Standards		I	✓	PM-HIR-004E	Configuration Management Plan for the HIRDLS Instrument Programme.	Reviewed 99
3.6.1.1	Engineering Standards		I	✓	PL-MMS-212(2)	Declared Processes List	
3.6.1.2	Selection of Specifications and Standards		I	✓	PA-MMS-317	Mission Assurance Requirements Compliance Matrix	Reviewed 99
3.6.2	Parts, Materials and Processes		-	-	-	-	-
3.6.2.1	Parts		I	✓	TC-MMS-383B	STH/SSH/SVA Declared Parts List	Reviewed 99
3.6.2.2	Materials		I	✓	PL-MMS-211(2)	Declared Materials List	
3.6.2.3	Processes		I	✓	PL-MMS-212(2)	Declared Processes List	

SECTION	SP-HIR-031E REQUIREMENT		FM (Acceptance)	Compliant Also see EM (Qual)	Document or Drawing		
					Ref.	Title/Comments	Comment
3.6.3	Standard and Commercial Parts		I	✓		No EEE, Hi-Rel, Commercial or Non-Standard parts are used in the construction of the FM STH Subsystem	
3.6.4	Moisture and Fungus Resistance		I	✓	PL-MMS-211(2)	Declared Materials List	
3.6.5	Corrosion Prevention and Control		I	✓	PL-MMS-211(2)	Declared Materials List	
3.6.5.1	Corrosion Resistance		I	✓	PL-MMS-211(2)	Declared Materials List	
3.6.5.2	Dissimilar Metals		I	✓	PL-MMS-211(2)	Declared Materials List	
3.6.5.3	Corrosive Fumes		D	✓	PL-MMS-211(2)	Declared Materials List	
3.6.5.4	Protective Treatment		D	✓	PL-MMS-211(2)	Declared Materials List	
3.6.5.5	Coatings and Adhesives		D	✓	PL-MMS-211(2) TC-MMS-339A	Declared Materials List EM STH Structural Analysis Summary.	Reviewed 99
3.6.5.6	Finish		D	✓	PL-MMS-211(2)	Declared Materials List	
3.6.6	Interchangeability and Replaceability					Not applicable to STH.	
3.6.7	Workmanship		I	✓	EIDP	Inspections detailed in Manufacturing History Record Cards	-
3.6.8	Identification and Marking		I	✓	DW-MMS-254(1) PL-MMS-211(2)	Structure/Thermal Subsystem ICD drawing Declared Materials List	

Notes:- **Design / Qualification Verification covered fully in EM QUALIFICATION End Item Data Packs – TC-MMS-442 for STH Qualification Reports**

SP-HIR-050D VERIFICATION CROSS REFERENCE MATRIX

EM / Qualification (Reviewed in Feb 1999) Reference Table Follows:

SECTION	SP-HIR-050D REQUIREMENT	EM (Qualification)		Compliant	Document or Drawing		
					Ref.	Title/Comments	Comment
3.	Requirements	-		-	-	-	
3.1	SSH Assembly	-		-	-	-	
3.1.1	SSH General Description	I		✓	DW-MMS-307(1)	Sunshield Subsystem (SSH) ICD drawing	Reviewed 99
3.1.2	SSH Performance	-		-	-	-	Reviewed 99
3.1.2.1	Door Size and Construction	I		✓	DW-MMS-307(1)	Sunshield Subsystem (SSH) ICD drawing	Reviewed 99
3.1.2.2	Hinge Position	I			DW-MMS-307(1)	Sunshield Subsystem (SSH) ICD drawing	Reviewed 99
3.1.2.3	Door Angle and Opening/Closing times	T		✓	TC-MMS-425(1)	Sunshield Subsystem (SSH) LTM Qual Test Report	Reviewed 99
3.1.2.4	Door Positional Resolution	A		✓	SP-MMS-354 TC-MMS-425(1)	Procurement Specification for a Redundant Stepper Motor/Gearhead Unit SSH LTM Qual Test Report	Reviewed 99
3.1.2.5	Knowledge of Door Position	T		✓	TC-MMS-425(1)	Sunshield Subsystem (SSH) LTM Test Report	Reviewed 99
3.1.2.6	Torque Disturbances	A		✓	TC-MMS-384(1)	SSH and SVA Design Analysis Report	Reviewed 99
3.1.2.7	Uncompensated Momentum	A		✓	TC-MMS-384(1)	SSH and SVA Design Analysis Report	Reviewed 99
3.1.2.8	Hold-down and Release Mechanism	I/T		✓	DW-MMS-307(1) TR-MMS-425(1)	Sunshield Subsystem (SSH) ICD drawing Sunshield Assembly (SSH) LTM Qual Test Report	Reviewed 99
3.1.2.9	Modes of Operation	-		-	-	-	Reviewed 99
3.1.2.10	Sealing	A		✓	TC-MMS-384(1)	SSH and SVA Design Analysis Report	Reviewed 99
3.1.2.11	Sun Sensors	I		✓	DW-MMS-307(1)	Sunshield Subsystem (SSH) ICD drawing	Reviewed 99
3.1.2.12	Aperture Plate	I		✓	DW-MMS-307(1)	Sunshield Subsystem (SSH) ICD drawing	Reviewed 99
3.2	SVA Assembly	-		-	-	-	-
3.2.1	SVA General Description	D/T		✓	DW-MMS-268(1) DW-MMS-254(D) TR-MMS-342(1)	Space View Aperture ICD Drawing Structure/Thermal Subsystem ICD drawing Space View Aperture Qual Test Report	Reviewed 99
3.2.2	SVA Performance	-		-	-	-	-
3.2.2.1	Cover	I		✓	DW-MMS-268(1)	Space View Aperture ICD Drawing	Reviewed 99

SECTION	SP-HIR-050D REQUIREMENT	EM (Qualification)		Compliant	Document or Drawing		
					Ref.	Title/Comments	Comment
3.2.2.2	Actuator	A		✓	TC-MMS-384(1)	SSH and SVA Design Analysis Report	Reviewed 99
3.2.2.2.1	Number of Operating Cycles	T		✓	TR-MMS-342(1)	SVA Qual Test Report	Reviewed 99
3.2.2.3	Cover Opening Time	T		✓	TR-MMS-342(1)	Space View Aperture EM Qual Test Report	Reviewed 99
3.2.2.4	Torque Disturbances	A		✓	TC-MMS-384(1)	SSH and SVA Design Analysis Report	Reviewed 99
3.2.2.5	Uncompensated Momentum	A		✓	TC-MMS-384(1)	SSH and SVA Design Analysis Report	Reviewed 99
3.2.2.6	Outer Baffle	I		N/A	-	Outer Baffle designed, supplied & fitted by LMMS	-
3.2.2.7	Seal	A		✓	TC-MMS-384(1)	SSH and SVA Design Analysis Report	Reviewed 99
3.2.2.8	Shield Status Sensors	T		✓	TR-MMS-342(1)	Space View Aperture EM Qual Test Report	Reviewed 99
3.2.2.9	Loom	I/T		✓	DW-MMS-268(1) TR-MMS-342(1)	Space View Aperture ICD Drawing Space View Aperture Qual Test Report	Reviewed 99 Reviewed 99
3.2.2.10	Albedo Shield	I		✓	DW-MMS-268(1)	Space View Aperture ICD Drawing	reviewed 99
3.3	Electrical Requirements	-		-	-	-	-
3.3.1	Electrical Interfaces	I/T		✓	DW-MMS-307(1) TR-MMS-425(1) DW-MMS-268(1) TR-MMS-342(1)	Sunshield Subsystem (SSH) ICD drawing Sunshield Assembly LTM Test Report Space View Aperture ICD Drawing Space View Aperture Qual Test Report	reviewed 99
3.3.2	Supply Voltage	I/T		✓	DW-MMS-307(1) TR-MMS-425(1) DW-MMS-268(1) TR-MMS-342(1)	Sunshield Subsystem (SSH) ICD drawing Sunshield Assembly LTM Test Report Space View Aperture ICD Drawing Space View Aperture Qual Test Report	reviewed 99
3.3.3	Power Consumption	T		✓	TR-MMS-425(1)	Sunshield Subsystem LTM Qual Test Report	Reviewed 99
3.3.4	Status Sensors	T		✓	TR-MMS-425(1) TR-MMS-342(1)	Sunshield Assembly LTM Test Report Space View Aperture Qual Test Report	Reviewed 99
3.3.5	Connectors	I		✓	DW-MMS-307(1) DW-MMS-268(1)	Sunshield Subsystem (SSH) ICD drawing Space View Aperture ICD Drawing	Reviewed 99
3.3.6	Grounding	I/T		✓	DW-MMS-307(1) TR-MMS-425(1) DW-MMS-268(1) TR-MMS-342(1)	Sunshield Subsystem (SSH) ICD drawing Sunshield Assembly LTM Test Report Space View Aperture ICD Drawing Space View Aperture Qual Test Report	Reviewed 99
3.3.7	Electromagnetic Compatibility	T		N/A	-	Test to be performed at EM Instrument Level	-

SECTION	SP-HIR-050D REQUIREMENT	EM (Qualification)		Compliant	Document or Drawing		
					Ref.	Title/Comments	Comment
3.3.7.1	General	I		✓	DW-MMS-307(1) DW-MMS-268(1)	Sunshield Subsystem (SSH) ICD drawing Space View Aperture ICD Drawing	Reviewed 99
3.3.7.2	Electro-Explosive Devices (EED's)	I		✓	DW-MMS-307(1) DW-MMS-268(1)	Sunshield Subsystem (SSH) ICD drawing Space View Aperture ICD Drawing	Reviewed 99
3.3.8	Electrostatic Discharge	T		N/A	-	Test to be performed at EM Instrument Level	-
3.4	Mechanical Requirements	-		-	-	-	-
3.4.1	Mechanical Design	-		-	-	See Section 3.4.2	-
3.4.2	Mechanical Interfaces	I		✓	DW-MMS-307(1) DW-MMS-268(1)	Sunshield Subsystem (SSH) ICD drawing Space View Aperture ICD Drawing	Reviewed 99
3.4.3	Strength Requirements	-		-	-	-	-
3.4.3.1	Quasi-Static Design Load Factor (TBC)	A		✓	TC-MMS-384(1)	SSH and SVA Design Analysis Report	Reviewed 99
3.4.3.2	Test Loads	A		✓	TC-MMS-384(1)	SSH and SVA Design Analysis Report	Reviewed 99
3.4.3.3	Margins of Safety	A		✓	TC-MMS-384(1)	SSH and SVA Design Analysis Report	Reviewed 99
3.4.3.4	On-Orbit Loads	A		✓	TC-MMS-384(1)	SSH and SVA Design Analysis Report	Reviewed 99
3.4.3.5	Load Distribution	A		✓	TC-MMS-384(1)	SSH and SVA Design Analysis Report	Reviewed 99
3.4.3.6	Material Properties and Allowables	A		✓	TC-MMS-384(1) PL-MMS-211 PL-MMS-212	SSH and SVA Design Analysis Report Declared Materials List Declared Processes List	Reviewed 99
3.4.4	Stiffness Requirements	A		× +Waiver= ✓	TC-MMS-384(1) TR-MMS-412	SSH and SVA Design Analysis Report. Resonance detected on the Sunshield assembly at 65Hz. See Non-Conformance Report no: HRIL0032. SSH EM EIDP Waiver given	Reviewed 99
3.4.5	Fatigue	A		✓	TC-MMS-384(1)	SSH and SVA Design Analysis Report	Reviewed 99
3.4.6	Thermal Stresses	A		✓	TC-MMS-384(1)	SSH and SVA Design Analysis Report	Reviewed 99
3.4.7	Torque Margin	A		✓	TC-MMS-384(1) TR-MMS-441(B)	SSH and SVA Design Analysis Report SSH/SVA Torque Margin Test Conclusions	Reviewed 99
3.4.8	Contamination	A		✓	PL-MMS-211 PL-MMS-212 PA-MMS-387	Declared Materials List Declared Processes List MMS Contamination Plan	Reviewed 99
3.4.9	Lubrication	A		✓	TC-MMS-384(1) PL-MMS-211	SSH and SVA Design Analysis Report Declared Materials List	Reviewed 99

SECTION	SP-HIR-050D REQUIREMENT	EM (Qualification)		Compliant	Document or Drawing		
					Ref.	Title/Comments	Comment
3.4.10	Envelope	I		✓	DW-MMS-254D DW-MMS-307(1) DW-MMS-268(1)	Structure/Thermal Subsystem ICD drawing Sunshield Subsystem (SSH) ICD drawing Space View Aperture ICD Drawing	Reviewed 99
3.4.11	Mass Properties	A/T		✓	TC-MMS-206F TC-MMS-420	STH/SSH Subsystem Mass Report LTM Sunshield End Item Data Pack	Reviewed 99
3.4.12	Ground Operation	A		✓	TC-MMS-384(1)	SSH and SVA Design Analysis Report	Reviewed 99
3.5	Thermal Requirements	-		-	-	-	-
3.5.1	Thermal Design Margins	A		✓	TC-MMS-384(1)	SSH and SVA Design Analysis Report	Reviewed 99
3.5.2	Thermal Control Techniques	A		✓	DW-MMS-307(1) DW-MMS-268(1)	Sunshield Subsystem (SSH) ICD drawing Space View Aperture ICD Drawing	Reviewed 99
3.5.3	Thermal Design Techniques	A		✓	TC-MMS-381	HIRDLS Instrument Thermal Analysis Report	Reviewed 99
3.5.4	Thermal Dissipation	A		✓	TC-MMS-381	HIRDLS Instrument Thermal Analysis Report	Reviewed 99
3.5.5	Control of Thermal Finishes	I		✓	PA-MMS-387A	MMS Subsystems Cleanliness and Contamination Control Plan	Reviewed 99
3.6	Environmental Conditions (Ground)			-	-	-	-
3.6.1	Ground Operation Environment	A		✓	TC-MMS-384(1)	SSH and SVA Design Analysis Report. Dynamic requirements enveloped by design limit loads.	Reviewed 99
3.6.1.1	Linear Acceleration	A		✓	TC-MMS-384(1)	SSH and SVA Design Analysis Report. Dynamic requirements enveloped by design limit loads.	Reviewed 99
3.6.1.2	Handling Shock	A		✓	TC-MMS-384(1)	SSH and SVA Design Analysis Report. Dynamic requirements enveloped by design limit loads.	Reviewed 99
3.6.1.3	Climatic Conditions	A		✓	PA-MMS-387A	MMS Subsystems Cleanliness and Contamination Control Plan & RAL Container Design	Reviewed 99
3.6.1.4	Vibration (Transport)	A		✓	TC-MMS-384(1)	SSH and SVA Design Analysis Report. Dynamic requirements enveloped by design limit loads. (& RAL Container design)	Reviewed 99
3.6.2	Launch/Ascent Phase	A		✓	TC-MMS-371A TC-MMS-384(1)	HIRDLS EM STH/SSH/SVA Venting SSH and SVA Design Analysis Report	Reviewed 99
3.6.2.1	Pressure Profile (Depressurisation)	A		✓	TC-MMS-371A TC-MMS-384(1)	HIRDLS EM STH/SSH/SVA Venting SSH and SVA Design Analysis Report	Reviewed 99

SECTION	SP-HIR-050D REQUIREMENT	EM (Qualification)		Compliant	Document or Drawing		
					Ref.	Title/Comments	Comment
3.6.3	Orbit Phase	A		✓	TC-MMS-371A TC-MMS-384(1) TC-MMS-381 PL-MMS-211	HIRDLS EM STH/SSH/SVA Venting SSH and SVA Design Analysis Report HIRDLS Instrument Thermal Analysis Report Declared Materials List	Reviewed 99
3.6.4	Nominal Mission	A		✓	PL-MMS-211 PL-MMS-212	Declared Materials List Declared Processes List	Reviewed 99
3.6.5	Storage	A		✓	PL-MMS-211 PL-MMS-212	Declared Materials List Declared Processes List	Reviewed 99
3.7	Reliability	A		✓	PA-MMS-209A	STH and SSH Reliability Prediction	Reviewed 99
3.7.1	Single Point Failures	A		✓	PA-MMS-210A	STH and SSH Failure Modes, Effects and Criticality Analysis	Reviewed 99
3.7.2	Operational Life SSH Door 58400 ops/HRM 110 ops/SVA 110 ops	A/T		✓	TR-MMS-425(1) TR-MMS-342(1)	Sunshield Assembly LTM Qual Life Test Report Space View Aperture EM Qual Test Report	Reviewed 99
4.0	Design Verification Requirements	-		-	-	-	-
4.1	General	-		-	-	-	-
4.1.1	Vibration Tests	T		✓	TR-MMS-412(A) TR-MMS-424(A)	Sunshield Assembly LTM Qual Test Report Space View Aperture EM Qual Test Report	Reviewed 99
4.1.2	Thermal Tests	T		✓	TR-MMS-342(1) TR-MMS-425(1)	Sunshield Assembly LTM Qual Test Report Space View Aperture EM Qual Test Report	Reviewed 99
4.1.3	EMC Tests	T		N/A	-	Tests to be performed at EM and FM Instrument level	
4.1.4	Mass Properties	A/T		✓	TC-MMS-206F DW-MMS-307(1) DW-MMS-268(1)	STH/SSH Subsystem Mass Report Sunshield Subsystem (SSH) ICD drawing Space View Aperture ICD Drawing	Reviewed 99

Notes:-**Design / Qualification Verification covered fully in EM QUALIFICATION End Item Data Packs – TC-MMS-420 for SSH Qualification Reports : TC-MMS-438 for SVA Qualification Reports**

FM / Acceptance (Reviewed in Feb 1999) Reference Table Follows:

SECTION	SP-HIR-50D REQUIREMENT		FM (Acceptance)	Compliant See Note 1	Document or Drawing		
					Ref.	Title/Comments	Comment
3.	**Requirements**		-	-	-	-	-
3.1	**SSH Assembly**		-	-	-	-	-
3.1.1	SSH General Description		I	✓	DW-MMS-307(1) DW-MMS-254(1)	Sunshield Subsystem (SSH) ICD drawing Structure/Thermal Subsystem ICD drawing	
3.1.2	SSH Performance		-	-	-	-	-
3.1.2.1	Door Size and Construction		I	✓	DW-MMS-307(1)	Sunshield Subsystem (SSH) ICD drawing	-
3.1.2.2	Hinge Position		I		DW-MMS-307(1)	Sunshield Subsystem (SSH) ICD drawing	-
3.1.2.3	Door Angle and Opening/Closing times		T	✓	TR-MMS-458(2)	SSH FM TV Test Report	
3.1.2.4	Door Positional Resolution		A	✓	SP-MMS-354 TR-MMS-458(2)	Procurement Specification for Motor/Gearhead Unit SSH FM TV Test Report	Reviewed 99
3.1.2.5	Knowledge of Door Position		T	✓	TR-MMS-458(2)	SSH FM TV Test Report	
3.1.2.6	Torque Disturbances		A	✓	TC-MMS-384(1) TR-MMS-458(2)	SSH and SVA Design Analysis Report SSH FM TV Test Report	Reviewed 99
3.1.2.7	Uncompensated Momentum		A	✓	TC-MMS-384(1)	SSH and SVA Design Analysis Report	Reviewed 99
3.1.2.8	Hold-down and Release Mechanism		I/T	✓	DW-MMS-307(1) TR-MMS-458(2)	Sunshield Subsystem (SSH) ICD drawing SSH FM TV Test Report	
3.1.2.9	Modes of Operation		I	✓	SP-HIR-050D	ITS Requirements captured	Reviewed 99
3.1.2.10	Sealing		A	✓	TC-MMS-384(1)	SSH and SVA Design Analysis Report	Reviewed 99
3.1.2.11	Sun Sensors		I	✓	DW-MMS-307(1)	Sunshield Subsystem (SSH) ICD drawing	-
3.1.2.12	Aperture Plate		I	✓	DW-MMS-307(1)	Sunshield Subsystem (SSH) ICD drawing	-
3.2	**SVA Assembly**		-	-	-	-	-
3.2.1	SVA General Description		D/T	✓	DW-MMS-268(1) DW-MMS-254(1)	Space View Aperture ICD Drawing Structure/Thermal Subsystem ICD drawing	
3.2.2	SVA Performance		-	-	-	-	-
3.2.2.1	Cover		I	✓	DW-MMS-268(1)	Space View Aperture ICD Drawing	-
3.2.2.2	Actuator		A	✓	TC-MMS-384(1)	SSH and SVA Design Analysis Report	Reviewed 99

SECTION	SP-HIR-50D REQUIREMENT		FM (Acceptance)	Compliant See Note 1	Document or Drawing Ref.	Title/Comments	Comment
3.2.2.2.1	Number of Operating Cycles		T	✓	TR-MMS-342(1) TR-MMS-486	Space View Aperture Qual EM Test SVA Aperture Function & TV FM Test Report	Reviewed 99
3.2.2.3	Cover Opening Time		T	✓	TR-MMS-486	Space View Aperture Function & TV FM Test Report	
3.2.2.4	Torque Disturbances		A	✓	TC-MMS-384(1)	SSH and SVA Design Analysis Report	Reviewed 99
3.2.2.5	Uncompensated Momentum		A	✓	TC-MMS-384(1)	SSH and SVA Design Analysis Report	Reviewed 99
3.2.2.6	Outer Baffle			N/A	-	Outer Baffle designed, supplied & fitted by LMMS	
3.2.2.7	Seal		A	✓	TC-MMS-384(1)	SSH and SVA Design Analysis Report	Reviewed 99
3.2.2.8	Shield Status Sensors		T	✓	TR-MMS-486	Space View Aperture Function & TV FM Test	
3.2.2.9	Loom		I/T	✓	DW-MMS-268(1)	Space View Aperture ICD Drawing	
3.2.2.10	Albedo Shield		I	✓	DW-MMS-268(1)	Space View Aperture ICD Drawing	
3.3	Electrical Requirements		-	-	-	-	-
3.3.1	Electrical Interfaces		I/T	✓	DW-MMS-307(1) TR-MMS-458(2) DW-MMS-268(1) TR-MMS-486	Sunshield Subsystem (SSH) ICD drawing Sunshield Assembly Function & TV FM Test Report Space View Aperture ICD Drawing Space View Aperture FM accept Test Report	
3.3.2	Supply Voltage		I/T	✓	DW-MMS-307(1) TR-MMS-458(2) DW-MMS-268(1) TR-MMS-486	Sunshield Subsystem (SSH) ICD drawing Sunshield Assembly Function & TV FM Test Report Space View Aperture ICD Drawing Space View Aperture Fn & TV FM accept Test Report	
3.3.3	Power Consumption		T	✓	TR-MMS-458(2) DW-MMS-307(1)	SSH Function & TV FM Test Report SSH ICD Drawing	
3.3.4	Status Sensors		T	✓	TR-MMS-458(2) TR-MMS-486	Sunshield Assembly Function & TV FM Test Report Space View Aperture Fn & TV FM accept Test Report	
3.3.5	Connectors		I	✓	DW-MMS-307(1) DW-MMS-268(1)	Sunshield Subsystem (SSH) ICD drawing Space View Aperture ICD Drawing	
3.3.6	Grounding		I/T	✓	DW-MMS-307(1) TR-MMS-458(2) DW-MMS-268(1) TR-MMS-486	Sunshield Subsystem (SSH) ICD drawing Sunshield Assembly Function & TV FM Test Report Space View Aperture ICD Drawing Space View Aperture Fn & TV FM accept Test Report	
3.3.7	Electromagnetic Compatibility			N/A	-		
3.3.7.1	General			N/A		Waived	

SECTION	SP-HIR-50D REQUIREMENT		FM (Acceptance)	Compliant See Note 1	Document or Drawing Ref.	Title/Comments	Comment
3.3.7.2	Electro-Explosive Devices (EED's)		I	✓	DW-MMS-307(1) DW-MMS-268(1)	Sunshield Subsystem (SSH) ICD drawing Space View Aperture ICD Drawing	
3.3.8	Electrostatic Discharge			N/A	-	Test to be performed at EM Instrument Level	
3.4	Mechanical Requirements		-	-	-	-	-
3.4.1	Mechanical Design		-	-	-	See Section 3.4.2	-
3.4.2	Mechanical Interfaces		I	✓	DW-MMS-307(1) DW-MMS-268(1)	Sunshield Subsystem (SSH) ICD drawing Space View Aperture ICD Drawing	
3.4.3	Strength Requirements		-	-	-	-	-
3.4.3.1	Quasi-Static Design Load Factor		A	✓	TC-MMS-384(1)	SSH and SVA Design Analysis Report	Reviewed 99
3.4.3.2	Test Loads		A	✓	TC-MMS-384(1)	SSH and SVA Design Analysis Report	Reviewed 99
3.4.3.3	Margins of Safety		A	✓	TC-MMS-384(1)	SSH and SVA Design Analysis Report	Reviewed 99
3.4.3.4	On-Orbit Loads		A	✓	TC-MMS-384(1)	SSH and SVA Design Analysis Report	Reviewed 99
3.4.3.5	Load Distribution		A	✓	TC-MMS-384(1)	SSH and SVA Design Analysis Report	Reviewed 99
3.4.3.6	Material Properties and Allowables		A	✓	TC-MMS-384(1) PL-MMS-211(2) PL-MMS-212(2)	SSH and SVA Design Analysis Report Declared Materials List Declared Processes List	Reviewed 99
3.4.4	Stiffness Requirements		A	✓	TC-MMS-384(1) TR-MMS-459 TR-MMS-485	SSH and SVA Design Analysis Report. SSH Vibrn Test ReportResonance detected on the Sunshield assembly at 65Hz. Non-Conformance Report no: HIR-RD-SA002-MMP. See SSH EIDPWaiver granted SVA Vibration Acceptance Test Report	Reviewed 99
3.4.5	Fatigue		A	✓	TC-MMS-384(1)	SSH and SVA Design Analysis Report	Reviewed 99
3.4.6	Thermal Stresses		A	✓	TC-MMS-384(1)	SSH and SVA Design Analysis Report	Reviewed 99
3.4.7	Torque Margin		A	✓	TC-MMS-384(1) TR-MMS-458(2) TR-MMS-486	SSH and SVA Design Analysis Report SSH TV & Fn FM Test Report SVA TV & Fn FM Test Report	Reviewed 99
3.4.8	Contamination		A	✓	PL-MMS-211(2) PL-MMS-212(2) PA-MMS-387	Declared Materials List Declared Processes List MMS Contamination Plan	
3.4.9	Lubrication		A	✓	TC-MMS-384(1) PL-MMS-211(2)	SSH and SVA Design Analysis Report Declared Materials List	Reviewed 99

SECTION	SP-HIR-50D REQUIREMENT		FM (Acceptance)	Compliant See Note 1	Document or Drawing Ref.	Title/Comments	Comment
3.4.10	Envelope		I	✓	DW-MMS-254(1)D DW-MMS-307(1) DW-MMS-268(1)	Structure/Thermal Subsystem ICD drawing Sunshield Subsystem (SSH) ICD drawing Space View Aperture ICD Drawing	
3.4.11	Mass Properties		A/T	✓	TC-MMS-206H DW-MMS-307(1) DW-MMS-268(1)	STH/SSH Subsystem Mass Report Sunshield Subsystem (SSH) ICD drawing Space View Aperture ICD Drawing	
3.4.12	Ground Operation		A	✓	TC-MMS-384(1)	SSH and SVA Design Analysis Report	Reviewed 99
3.5	Thermal Requirements		-	-	-	-	-
3.5.1	Thermal Design Margins		A	✓	TC-MMS-384(1)	SSH and SVA Design Analysis Report	Reviewed 99
3.5.2	Thermal Control Techniques		A	✓	DW-MMS-307(1) DW-MMS-268(1)	Sunshield Subsystem (SSH) ICD drawing Space View Aperture ICD Drawing	
3.5.3	Thermal Design Techniques		A	✓	TC-MMS-381	HIRDLS Instrument Thermal Analysis Report	Reviewed 99
3.5.4	Thermal Dissipation		A	✓	TC-MMS-381	HIRDLS Instrument Thermal Analysis Report	Reviewed 99
3.5.5	Control of Thermal Finishes		I	✓	PA-MMS-387A	MMS Subsystems Cleanliness and Contamination Control Plan	Reviewed 99
3.6	Environmental Conditions (Ground)		-	-	-	-	-
3.6.1	Ground Operation Environment		A	✓	TC-MMS-384(1)	SSH and SVA Design Analysis Report. Dynamic requirements enveloped by design limit loads.	Reviewed 99
3.6.1.1	Linear Acceleration		A	✓	TC-MMS-384(1)	SSH and SVA Design Analysis Report. Dynamic requirements enveloped by design limit loads.	Reviewed 99
3.6.1.2	Handling Shock		A	✓	TC-MMS-384(1)	SSH and SVA Design Analysis Report. Dynamic requirements enveloped by design limit loads.	Reviewed 99
3.6.1.3	Climatic Conditions		A	✓	PA-MMS-387A	MMS Subsystems Cleanliness and Contamination Control Plan & RAL Container Design	Reviewed 99
3.6.1.4	Vibration (Transport)		A	✓	TC-MMS-384(1)	SSH and SVA Design Analysis Report. Dynamic requirements enveloped by design limit loads. RAL Container Design.	Reviewed 99
3.6.2	Launch/Ascent Phase		A	✓	TC-MMS-454(1) TC-MMS-384(1)	HIRDLS STH/SSH/SVA Venting SSH and SVA Design Analysis Report	 Reviewed 99
3.6.2.1	Pressure Profile (Depressurisation)		A	✓	TC-MMS-454(1) TC-MMS-384(1)	HIRDLS STH/SSH/SVA Venting SSH and SVA Design Analysis Report	 Reviewed 99

SECTION	SP-HIR-50D REQUIREMENT		FM (Acceptance)	Compliant See Note 1	Document or Drawing Ref.	Title/Comments	Comment
3.6.3	Orbit Phase		A	✓	TC-MMS-384(1) TC-MMS-381 PL-MMS-211(2)	SSH and SVA Design Analysis Report HIRDLS Instrument Thermal Analysis Report Declared Materials List	Reviewed 99 Reviewed 99
3.6.4	Nominal Mission		A	✓	PL-MMS-211(2) PL-MMS-212(2)	Declared Materials List Declared Processes List	
3.6.5	Storage		A	✓	PL-MMS-211(2) PL-MMS-212(2)	Declared Materials List Declared Processes List	
3.7	Reliability		A	✓	PA-MMS-209A	STH and SSH Reliability Prediction	Reviewed 99
3.7.1	Single Point Failures		A	✓	PA-MMS-210A	STH and SSH Failure Modes, Effects and Criticality Analysis	Reviewed 99
3.7.2	Operational Life SSH Door 58400 ops/HRM 110 ops/SVA 110 ops		A/T	✓	TR-MMS-425(1) TR-MMS-342(1)	Sunshield Assembly LTM Test Report Space View Aperture EM Test Report	Reviewed 99
4.0	Design Verification Requirements		-	-	-	-	-
4.1	General		-	-	-	-	-
4.1.1	Vibration Tests		T	✓	TR-MMS-459 TR-MMS-485	SSH FM Vibration Test Report Space View Aperture FM Test Report	
4.1.2	Thermal Tests		T	✓	TR-MMS-458(2) TR-MMS-486	SSH FM Thermal Test Report Space View Aperture Function & TV FM Test Report	
4.1.3	EMC Tests			N/A	-	Tests to be performed at EM and FM Instrument level	-
4.1.4	Mass Properties		A/T	✓	TC-MMS-206H DW-MMS-307(1) DW-MMS-268(1)	STH/SSH Subsystem Mass Report Sunshield Subsystem (SSH) ICD drawing Space View Aperture Assembly ICD Drawing	

STH / SSH / SVA Test Summary Matrix

EM QUALIFICATION / LIFE TESTING

STH	SSH	SVA
Vibration	**Vibration**	**Vibration**
TP341 / TR423	TP398 / TR412	TP411 / TR424
13G Sine Dwell 8G 18-50Hz 5.64gRMS 120Secs	8G 18-50Hz 14.1gRMS 120secs	14.1gRMS 120secs
Thermal (Bakeout)	**Function/Thermal**	**Function/Thermal**
TP433 / TR434	TP398 / TR425 TR411 (Torque)	TP411 / TR342 TR411 (Torque)
60°C	T=-35°C to 35°C	T=-35°C to 35°C
	Life Test	
	T=-25°C to 25°C	
	0-123° 500x each T 70-123° 30000x each T	

KEY: TP=Test Procedure TR=Test Report

PFM ACCEPTANCE TESTING

STH	SSH	SVA
Vibration	**Vibration**	**Vibration**
TP448 / TR461	TP448 / TR459 TP452 / TR461	TP451 / TR485
4.45gRMS 60secs	4.45gRMS 60secs 7.4gRMS 60Secs	7.4gRMS 60secs
Thermal (Bakeout)	**Function/Thermal**	**Function/Thermal**
TP470 / AIV-99-106-STC	TP452 / TR458	TP451 / TR486
60°C & TQCM	T=-25°C to 25°C	T=-25°C to 25°C

End Item Data Packs

STH EIDP	SSH EIDP	SVA EIDP
TC-MMS-442	TC-MMS-420	TC-MMS-438

STH EIDP	SSH EIDP	SVA EIDP
TC-MMS-463	TC-MMS-464	TC-MMS-465
MLI EIDP		
TC-MMS-466		

DISTRIBUTION LIST

INTERNAL	EXTERNAL
N Crossland	N Morris (RAL)
T Forward	LMMS / NASA Copies via RAL
I Stewart	Electronic: HIRDLS2/USERS/MMS

QUALIFICATION TEST PROCEDURES AND ASSOCIATED TEST REPORTS

TITLE	DOCUMENT REFERENCE		ISSUE
	COMPANY NO.	CUSTOMER NO.	
Space View Aperture Assembly EM Test Procedure	3164-SV001-TPE	TP-MMS-411	1
EM Space View Aperture Vibration Test Report	3164-SV003-TRE	TR-MMS-424	A
Space View Aperture Qualification Test Report	3164-SA024-TRE	TR-MMS-342	1
SSH/SVA Torque Margins Conclusions Post Functional Test	3164-SS088-TRE	TR-MMS-441	B
FM SVA Vibration Test Report	3164-SV012-TRF	TR-MMS-485	1
FM SVA Thermal Vacuum and Functional Test Report	3164-SV013-TRF	TR-MMS-486	1

DESIGN FILES

Design File Number	Title	Volume Number	Date Opened	Original Author/s	Held By	Dept	Date Closed	Archive
3164-SA023-DFL	Sunshield Assembly Design File	1	01-May-98	R Coupe	R Coupe	DSR		
3164-SS030-DFL	Structural Analysis	1	08-Nov-91	M Webber			01-Mar-95	Archived Bldg 11
		2		M Webber			02-Mar-95	Archived Bldg 11
		3		M Webber			03-Mar-95	Archived Bldg 11
		4		M Webber			04-Mar-95	Archived Bldg 11
		5		M Webber	N Crossland	DSR		
		6		I Scott	N Crossland	DSR		
		7		N Crossland	N Crossland	DSR		
		8		N Crossland	N Crossland	DSR		
		9		N Crossland	N Crossland	DSR		
		10		N Crossland	N Crossland	DSR		
		11		N Crossland	N Crossland	DSR		
		12		P Grundy	P Grundy	DTS		
		13		N Crossland	N Crossland	DSR		
		14		N Crossland	N Crossland	DSR		
		15		N Crossland	N Crossland	DSR		
		16		N Crossland	N Crossland	DSR		
3164-SX035-DFL	EM STH Subsystem Mechanical Design	1	01-May-97	A Stewart/C Bryan	A Stewart	DSR		
		2		A Stewart	A Stewart	DSR		
3164-SS057-DFL	STH Subsystem Mechanical Interfaces	1	01-May-97	A Stewart	A Stewart	DSR		
		2		A Stewart	A Stewart	DSR		
		3		A Stewart	A Stewart	DSR		
		4		A Stewart	A Stewart	DSR		
		5		A Stewart	A Stewart	DSR		
		6		A Stewart	A Stewart			
3164-SS037-DFL	Thermal Analysis (Communications)	1	14-Apr-93	D Tye	M Clarke	DTS		
3164-SS038-DFL	Thermal Analysis	1	14-Apr-93	D Tye	M Clarke	DTS		
		2		R Moss	M Clarke	DTS		
		3		R Moss	M Clarke	DTS		

THEORETICAL ANALYSES

TITLE	DOCUMENT REFERENCE COMPANY NO.	DOCUMENT REFERENCE CUSTOMER NO.	ISSUE
Space View Aperture Assembly ICD	3164-SV001-25-0	DW-MMS-268	A
SSH and SVA Design Analysis Report	TC-MMS-384	TC-MMS-384	1
EM STH Structural Analysis Summary	3164-SS060-ANZ	TC-MMS-339	A
STH / SSH Subsystem Mass Estimate	3164-SS075-ANZ	TC-MMS-206	F
HIRDLS EM STH/SSH Venting	3164-SS063-TNO	TC-MMS-371	A
HIRDLS FM STH/SSH/SVA Venting	3164-SS091-TNO	TC-MMS-454	1
HIRDLS Instrument Thermal Analysis	3164-SS067-RPZ	TC-MMS-381	A
STH and SSH Reliability Prediction	3164-SS004-ANR	PA-MMS-209	A
STH and SSH Failure Modes, Effects and Criticality Analysis	3164-SS003-ANA	PA-MMS-210	A
Hazard Analysis Report for MMS Supplied Subsystems	3164-SS069-ANH	PA-MMS-386	A

EVIDENCE OF INTERFACE CONTROL

SPACE VIEW APERTURE INTERFACE CONTROL DRAWING

MMS Drawing No. HR2L040
Customer Drawing No. DW-MMS-267

CHANGE NUMBER	DETAILS	ISSUE
3164-00174	First Issue	A
3164-00342	No changes – updated to numerical issue	1

HIRDLS

HIGH RESOLUTION DYNAMICS LIMB SOUNDER

Originator: Tony Forward Date: 8th June 1998

Subject/Title: **HAZARD ANALYSIS REPORT FOR MMS SUPPLIED SUBSYSTEMS**

Description/Summary/Contents:

This report details the potential safety hazards which might arise from the use and handling of the STH, SSH and SVA.

Keywords: HIRDLS, Structure, Thermal, Sunshield, Space View Aperture, Safety, Hazard

Purpose of this Document: Definition of potential hazards arising from the STH, SSH and SVA subsystems

Reviewed/Approved by:			
Date (yy-mm-dd):	98-6-11		

Rutherford Appleton Laboratory
Chilton
Didcot
Oxfordshire
OX11 0QX
United Kingdom

Matra Marconi Space UK
Anchorage Road
Portsmouth
Hants PO3 5PU
United Kingdom

EOS

HAZARD ANALYSIS REPORT

FOR MMS SUPPLIED SUBSYSTEMS

Responsible Engineer: _____ Date: 8th June '98

Quality Assurance: _____ Date: 11/6/98

Project Manager: _____ Date: 11-6-98

© MATRA MARCONI SPACE UK LIMITED

THE COPYRIGHT IN THIS DOCUMENT IS THE PROPERTY OF MATRA MARCONI SPACE UK LIMITED. This document is supplied by Matra Marconi Space UK Limited on the express terms that it is to be treated as confidential and that it may not be copied, used or disclosed to others for any purpose except as expressly authorised under the terms of Contract No N2A 3R 0386.

Any person, other than the authorised holder, who finds or otherwise obtains possession of the document, should post it, together with his/her name and address, to the Registry, Matra Marconi Space UK Limited, Anchorage Road, Portsmouth, England, PO3 5PU. Postage will be refunded.

CONTENTS

1. SCOPE 4
1.1 Abbreviations 4
2. DOCUMENTS 5
2.1 Applicable Documents 5
2.2 Reference Documents 5
3. REQUIREMENTS 6
4. GENERAL DESCRIPTION 7
4.1 Structure/Thermal Subsystem (STH) 7
4.2 Sunshield Subsystem (SSH) 7
4.3 Space View Aperture Mechanism (SVA) 7
5. HAZARD ANALYSIS 9
5.1 Hazard Sources 9
5.2 Hazard Identification Matrix 16
5.3 Residual Hazard Sheets 17

FIGURES

Figure 4-1 HIRDLS General Configuration 8

1. SCOPE

The purpose of this document is to identify all potential hazards relevant to the HIRDLS subsystems and their associated ground support equipment; and subsequently, to collate instrument safety aspects and hazards considered by MMS in those areas of design, manufacture, inspection, test and operation over which MMS have authority and control. This report also contains a Residual Hazard Sheet for each identified hazard, which desribes the hazard, defines the applicable safety requirements, and defines the controls to be used to ensure that the potential hazards will not occur.

The analysis has been performed for all potential hazards during the ground operations (including handling, test and transport) until launch. Consideration has also been given to possible space debris when on orbit.

Hazards resulting from sub-assemblies, subsystems or equipments are analysed by the appropriate sub-contractors who must satisfy MMS that such analyses and subsequent control are satisfactory. MMS have then included the synthesis of the lower level hazard analyses into the HIRDLS hazard tables where appropriate, and included a report of such analyses in their hazardous conditions report. MMS ensure that, where they sub-contract any element to a subcontractor, the controls defined in the hazard analysis are implemented as relevant by the sub-contractors. MMS PA monitoring and audit of sub-contractors include verification that safety requirements are being complied with by the sub-contractors.

It is evident that some hazards exist (for which analysis and control are required) above the level of direct MMS involvement. Such analysis is not wholly within MMS authority. In such cases it is the responsibility of the Instrument Integrator and the Spacecraft Contractor to ensure, that where MMS equipment is held by and/or under the control of authorities not under sub-contract to MMS, adequate controls are defined and implemented.

1.1 Abbreviations

CSS	Cooler Subsystem
EXT	External (e.g. spacecraft interfaces)
GSS	Gyro Subsystem
IPU	Instrument Processor Unit
IPS	Instrument Power Subsystem
ITO	Indium Tin Oxide
SSH	Sunshield Subsystem
STH	Structure/Thermal Subsystem
TBC	To Be Confirmed
TBD	To Be Decided
TSS	Telescope Subsystem

2. DOCUMENTS

The following documents, of the stated issue and date, form part of the present specification to the extent specified herein.

2.1 Applicable Documents

AD1	HIRDLS Instrument Technical Specification	SP-HIR-13R
AD2	Mission Assurance Requirements	GSFC 424-11-13-01
AD3	Unique Instrument Interface Document (UIID)	GSFC 424-28-21-06
AD4	General Interface Requirements Document (GIRD)	GSFC-422-11-12-01
AD5	Specification for HIRDLS	GSFC-424-28-21-04
AD6	Contamination Control Plan	PA-HIR-006A
AD7	Performance Assurance Plan for HIRDLS	PA-HIR-003
AD8	Safety Assurance of ESA Spacecraft and Associated Equipment	PSS-01-40
AD9	Material and Process Selection and Control for ESA Spacecraft and Associated Equipment	PSS-01-70

2.2 Reference Documents

RD1	STH and SSH Failure Modes, Effects, & Criticality Analysis	PA-MMS-210

3. REQUIREMENTS

The hazard categories quoted in the hazard analysis tables are in accordance with those defined in ESA PSS-01-40 and are defined as follows:

1) Catastrophic Hazard. May cause:-

- loss of life, life-threatening or permanently disabling injury or occupational illness.

2) Critical Hazard. May cause:-

- temporary disabling, but not life-threatening injury, or temporary occupational illness.
- loss of, or major damage to, flight systems, major flight-system elements, or ground facilities.
- loss of, or major damage to, public or private property. or
- long term detrimental environmental effects.

3) Marginal Hazard. May cause:-

- minor non-disabling injury or occupational illness.
- minor damage to other hardware.
- minor damage to public or private property. or
- temporary detrimental environmental effects.

4) Negligible Hazard. Will not result in any of the above.

In each case the hazard has been classified in terms of the end result of the hazard occuring and does not take into account any reduction in risk consequent on application of the hazard control.

4. GENERAL DESCRIPTION

The HIRDLS Instrument is a multi-channel limb-viewing infrared (IR) radiometer for high resolution monitoring of upper tropospheric, stratospheric and mesospheric temperature, trace chemicals and geopotential height gradients.

HIRDLS is an international joint development project between the US and the UK and is planned for flight on the Earth Observing System (EOS) Chemistry Mission (CHEM) Platform, scheduled to be launched in 2002.

MMS is responsible for the design, development and manufacture of the Structure/Thermal and Sunshield subsystems. The HIRDLS General Configuration is illustrated in Figure 4-1.

4.1 Structure/Thermal Subsystem (STH)

The Instrument is contained in a roughly cubical, 1.3-meter-size box attached to the earth-facing side of the spacecraft. A Baseplate to which the other subsystems and components of the Instrument are attached, either directly or indirectly, serves as the mechanical interface to the spacecraft. Radiator panels, perpendicular to the Baseplate, carry the components of the Cooler Subsystem and some of the electronics modules; the remaining electronic units being located in the -X end of the instrument. These radiator panels form the outer wall of the Instrument on the anti-sun side and radiate heat to space. The rest of the Instrument enclosure consists of panels, externally covered with multi-layer insulation (MLI) on the non-radiator surfaces.

4.2 Sunshield Subsystem (SSH)

The Instrument views the limb along a line-of-sight inclined downward at an angle of approximately 25° below horizontal. This view is via an aperture and an inclined rectangular tunnel that allows a small elevation scan range and a large azimuth scan range while shading the interior of the Instrument enclosure from sunlight. An aperture door is latched closed to protect the interior of the Instrument from contamination during launch. also serves as an adaptive sunshield that it partially closes the aperture once per orbit near local sunset to prevent direct sunlight entering the aperture.

4.3 Space View Aperture Mechanism (SVA)

The SVA is used to close the chopper reference aperture and to prevent particulate contamination during the AIT phase and launch. Once in orbit, the SVA is used once to open the chopper reference aperture.

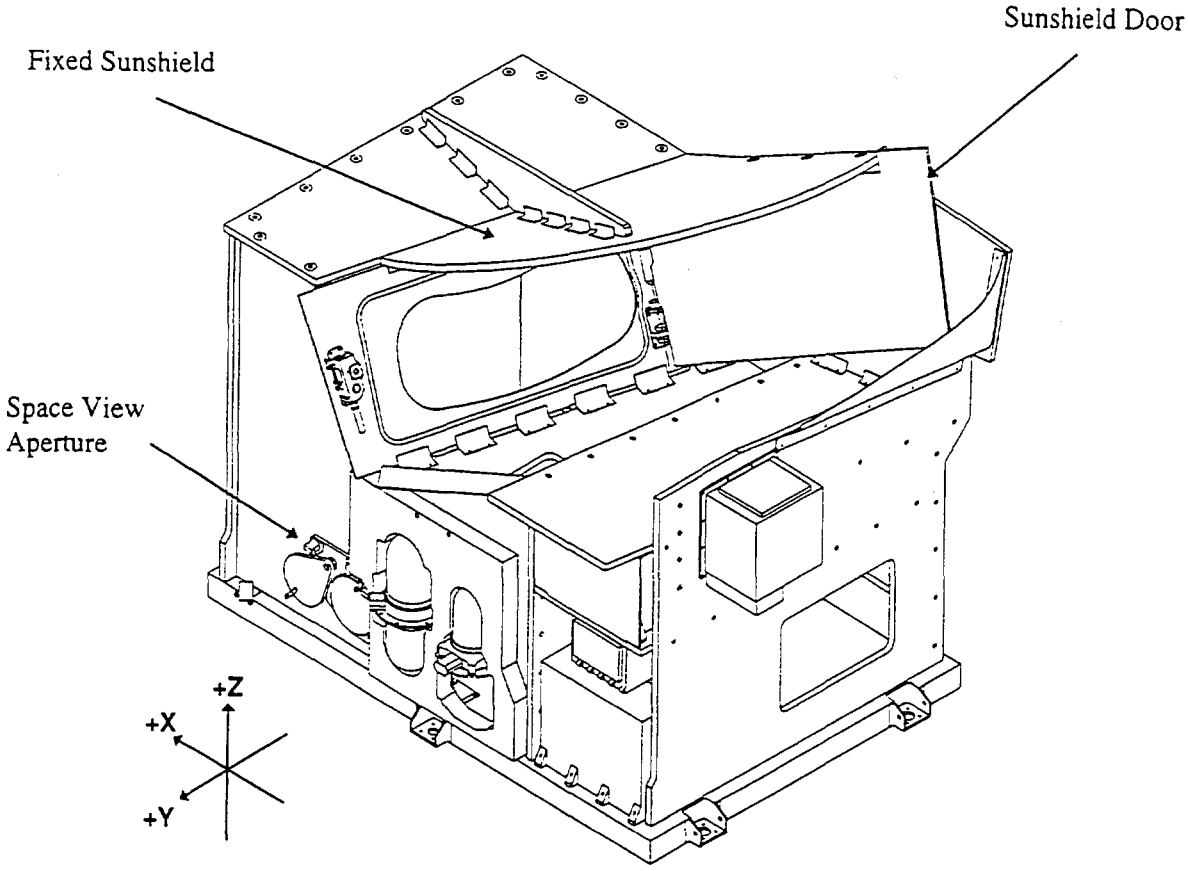

Figure 4-1 HIRDLS General Configuration

5. HAZARD ANALYSIS

5.1 Hazard Sources

The Hazard Sources Checklist is used to identify potential hazards that may apply to the Instrument. The following checklists are produced for the constituent parts of the MMS HIRDLS work i.e. STH, SSH and SVA.

HAZARD SOURCES CHECKLIST - STH		
Potential Hazard Source	**Applicable to Sub-Assembly Element(s)**	**GSE**
Hazardous Electrical Systems	None	None
Electroexplosive Devices	None	None
Propellants (Solid, Liquid)	None	None
Pressure	None	None
Vacuum	None	None
Chemical Products:		
- Corrosive	None	None
- Toxic	None	None
- Asphyxiating	None	None
- Explosive	None	None
- with Biological Effect	None	None
Radiation:		
- Non-Ionising	None	None
- Ionising	None	None
- Visible	None	None
- I.R.	None	None
- U.V.	During cleanliness inspections	None
- Acoustic / Vibration Emission	During testing	None

HAZARD SOURCES CHECKLIST - STH		
Potential Hazard Source	**Applicable to Sub-Assembly Element(s)**	**GSE**
High Temperature (exposed surface)	None other than normal test and bake-out temperatures	None
Low Temperature (exposed surface)	None other than normal test temperatures	None other than normal test temperatures
Deploying Mechanisms	None	None
Mechanical Energy	STH Structure	STH Structure (in conjunction with MGSE)
Other Hazard Sources	None	None
Space Debris	None	None

HAZARD SOURCES CHECKLIST - SSH		
Potential Hazard Source	**Applicable to Sub-Assembly Element(s)**	**GSE**
Hazardous Electrical Systems	None	None
Electroexplosive Devices	None	None
Propellants (Solid, Liquid)	None	None
Pressure	None	None
Vacuum	None	None
Chemical Products:		
- Corrosive	None	None
- Toxic	None	None
- Asphyxiating	None	None
- Explosive	None	None
- with Biological Effect	None	None
Radiation:		
- Non-Ionising	None	None
- Ionising	None	None
- Visible	None	None
- I.R.	None	None
- U.V.	During cleanliness inspections	None
- Acoustic / Vibration Emission	During testing	None

HAZARD SOURCES CHECKLIST - SSH		
Potential Hazard Source	**Applicable to Sub-Assembly Element(s)**	**GSE**
High Temperature (exposed surface)	None other than normal test and bake-out temperatures	None
Low Temperature (exposed surface)	None other than normal test temperatures	None other than normal test temperatures
Deploying Mechanisms	None	None
Mechanical Energy	SSH Structure	SSH Structure (in conjunction with MGSE)
Other Hazard Sources	None	None
Space Debris	None	None

HAZARD SOURCES CHECKLIST - SVA		
Potential Hazard Source	**Applicable to Sub-Assembly Element(s)**	**GSE**
Hazardous Electrical Systems	None	None
Electroexplosive Devices	None	None
Propellants (Solid, Liquid)	None	None
Pressure	None	None
Vacuum	None	None
Chemical Products:		
- Corrosive	None	None
- Toxic	None	None
- Asphyxiating	None	None
- Explosive	None	None
- with Biological Effect	None	None
Radiation:		
- Non-Ionising	None	None
- Ionising	None	None
- Visible	None	None
- I.R.	None	None
- U.V.	During cleanliness inspections	None
- Acoustic / Vibration Emission	During testing	None

HAZARD SOURCES CHECKLIST - SVA		
Potential Hazard Source	**Applicable to Sub-Assembly Element(s)**	**GSE**
High Temperature (exposed surface)	None other than normal test and bake-out temperatures	None
Low Temperature (exposed surface)	None other than normal test temperatures	None other than normal test temperatures
Deploying Mechanisms	None	None
Mechanical Energy	SVA Structure	SVA Structure (in conjunction with MGSE)
Other Hazard Sources	None	None
Space Debris	None	None

5.2 Hazard Identification Matrix

The following is a summary of the hazards identified for the ASAR Instrument broken down into major elements:-

Potential Hazard	STH	SSH	SVA
Thermodynamic and Fluid Hazards High/low pressure High/low temperature Heat transfer Fluid jet		RHS-3	RHS-4
Electrical Hazards High voltage Static electricity Electric current			
Electromagnetic Hazards Radiation (X, RF, Laser, Nuclear) Light Magnetic field Ionisation			
Chemical Hazards Reactivity (corrosivity, acidity, ...) Flammability Explosivity (hypergolicity, ...) Toxicity Carcinoganicity Asphixiant			
Mechanical Hazards Mechanical energy Mechan. property (sharpness, ...) Stresses (tension, friction, ...) Forces (linear, torque, vibration, ..) Fragility (brittleness, ...)	RHS-1,2		
Other Space debris			

5.3 Residual Hazard Sheets

The following Residual Hazard Sheets provide a description of each potential hazard and describe the means by which these hazards will be controlled. Each hazard is categorised as described in Section 3 of this analysis in terms of it's severity.

HIRDLS -STH	RESIDUAL HAZARD SHEET - 1
Title:- Structural Failure	**Severity:- Catastrophic**

Description of Hazard Source and Potential Effect of Hazard:

Collapse of structure during test/launch leading to:

1) Major damage to structure.

2) Major damage to other equipment.

3) Loss of life or life threatening injury.

Applicable Safety Requirements:

EWR 127-1(T) Range Safety Requirements, 45th and 30th Space Wing, USAF.
European Standards.

Hazard Controls and Acceptance Rationale:

1) The design uses materials which meet the requirements of ESA PSS - 01 - 70.

2) Where failure of metallic element could produce the hazard, the elements material is selected in accordance with ESA PSS - 01 - 736.

3) Structural stress analysis verifies the design capability of meeting the environmental requirements within the required safety factors.

4) MMS procedures describe precautions to be taken during handling processes (e.g. clearance areas, protective screens, warning signs etc.).

5) The structure is qualified by test.

Attachments:

Signature of Originator:

Approvals:

HIRDLS -STH	RESIDUAL HAZARD SHEET - 2
Title:- MGSE Failure	**Severity:- Catastrophic**

Description of Hazard Source and Potential Effect of Hazard:

Collapse of Mechanical Ground Support Equipment leading to:

1) Major damage to antenna.
2) Major damage to other equipment.
3) Loss of life or life threatening injury.

Applicable Safety Requirements:

EWR 127-1(T) Range Safety Requirements, 45th and 30th Space Wing, USAF.
European Standards.

Hazard Controls and Acceptance Rationale:

1) The MGSE is designed and procured by RAL and is supplied to MMS as Customer Furnished Equipment.

2) MMS will review and agree the MGSE handling procedures produced by RAL prior to usage.

Attachments:

Signature of Originator:

Approvals:

HIRDLS -SSH	RESIDUAL HAZARD SHEET - 3
Title:- High Temperature	**Severity:- Negligable**

Description of Hazard Source and Potential Effect of Hazard:

Actuator(s) overheat during ground testing. The actuators are qualified to + 80°C. In the stall condition, this temperature might be reached if the power is left on.

Applicable Safety Requirements:

EWR 127-1(T) Range Safety Requirements, 45th and 30th Space Wing, USAF.
European Standards.

Hazard Controls and Acceptance Rationale:

Operating procedures will be written for the SSH to ensure that potential hazards are controlled.

1) The maximum operating temperature of the actuators is + 50°C.

2) The temperature of the actuator windings will be monitored by thermistors whenever they are powered.

3) If necessary, forced convective cooling will be used to during on ground testing maintain an adequate temperature margin whilst the actuators are powered and after they have been powered until their temperature has stabilised.

4) The operating procedure will identify the importance of monitoring the actuator temperature and maintaining it within the qualification limits.

Attachments:

Signature of Originator:

Approvals:

HIRDLS - SVA	RESIDUAL HAZARD SHEET - 4
Title:- High Temperature	**Severity:- Negligable**

Description of Hazard Source and Potential Effect of Hazard:

The HOP actuator operation temperature is + 120°C.

Applicable Safety Requirements:

EWR 127-1(T) Range Safety Requirements, 45th and 30th Space Wing, USAF.
European Standards.

Hazard Controls and Acceptance Rationale:

Operating procedures will be written for the SVA to ensure that potential hazards are controlled.

1) The temperature of the actuator will be monitored by whenever it is powered.

2) The operating procedure will identify the importance of monitoring the actuator temperature and maintaining it within the qualification limits.

Attachments:

Signature of Originator:

Approvals:

DISTRIBUTION LIST

INTERNAL	EXTERNAL
J Harvey	N Morris (RAL)
T Forward	
I Stewart	
C.Burrows	

CHANGE RECORD

CHANGE NUMBER	CLASS	CHANGE DETAILS	ISSUE
3164-00129	-	First Issue	A

PROJECT REVIEW DETAILS

DOCUMENT NO.	TITLE	DATE	OUTSTANDING ACTIONS
External Package	Preliminary Design Review (PDR)	16/9/97	None
External Package	Preliminary Design Audit (PDA)	21/10/97	None
EOS-HIR-TRW-GN-0006	PM1 and Chemistry Technical Audit	9/10/98	None
3164-SS076-DRZ	External Critical Design Audit (CDA)	11/2/99	None
HDRLS-003	EM SVA Mandatory Inspection Point Review (MIP)	15/2/99	None
HRDLS-PA-008	EM SVA Assembly Test Readiness Review	15/2/99	None
HRDLS-PA-009	EM SVA Assembly Test Review Board (TRB) and Non-Conformance Report Review	9/3/99	None
External Package	Critical Design Review (CDR)	28/4/99	RFA 2 pending closing
Major Internal Review	Phase Review 5	8/6/99	None
Major Internal Review	Phase Review 6	10/9/99	None
HRDLS-PA-018	FM SVA Test Readiness Review (TRR)	18/01/00	None
TC-MMS-465 (EIDP)	Pre-ship Review	15/2/00	TBD
TC-MMS-465 (EIDP)	Customer Acceptance Review	15/2/00	TBD