SUNSHIELD ASSEMBLY
FLIGHT MODEL
END ITEM DATA PACK

TC-MMS-464

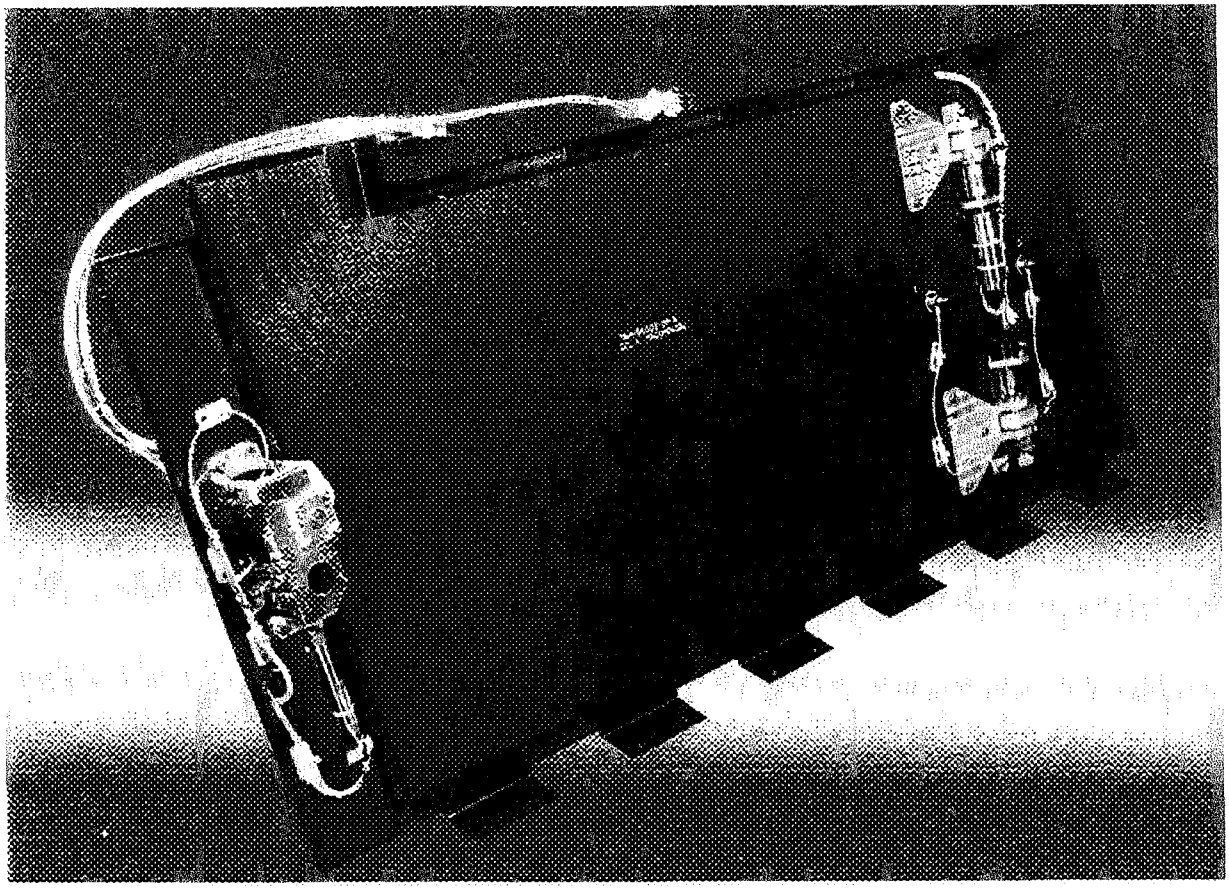

HIRDLS

TC-MMS-464
(3164-SA033-DPF)
Issue 1

HIGH RESOLUTION DYNAMICS LIMB SOUNDER

Originator N Crossland Date 24 November, 1999

Subject/Title **FM Sunshield / HDA Assembly End Item Data Pack**

Description/Summary/Contents.

The purpose of this data pack is to define and reconcile the design and build standard of the HIRDLS Sunshield / HDA Assembly Flight Model (FM) The pack identifies, where applicable, all physical and functional non-compliance's and any additional information required for the next sequence of operations

The package is part of the deliverable documentation requirement defined in Statement of Work PM-RAL-098A on Contract No N2A 3R 0386

Keywords FM, Sunshield, Deliverable Data Package (EIDP)

Purpose of this Document Deliverable Data Pack for Sunshield / HDA Assembly

Reviewed/Approved by Date (yy-mm-dd):			

Matra Marconi Space
Anchorage Road
Portsmouth
Hampshire PO3 5PU
England

EOS

FM SUNSHIELD / HDA ASSEMBLY
END ITEM DATA PACK

TC-MMS-464

Responsible Engineer ---------- Date ----------

Quality Assurance ---------- Date ----------

Project Manager ---------- Date ----------

© MATRA MARCONI SPACE UK LIMITED

THE COPYRIGHT IN THIS DOCUMENT IS THE PROPERTY OF MATRA MARCONI SPACE UK LIMITED This document is supplied by Matra Marconi Space UK Limited on the express terms that it is to be treated as confidential and that it may not be copied, used or disclosed to others for any purpose except as expressly authorised under the terms of Contract No N2A 3R 0386

Any person, other than the authorised holder, who finds or otherwise obtains possession of the document, should post it, together with his/her name and address, to the Registry, Matra Marconi Space UK Limited, Anchorage Road, Portsmouth, England, PO3 5PU Postage will be refunded

CONTENTS

SECTION

1 TOP LEVEL DOCUMENTATION
- Certificate of Conformity
- Minutes of Delivery Review Board (DRB)

2 AS DESIGNED DOCUMENTATION
- As Designed Configuration Item Data List (CIDL)
- Drawing Tree and List
- Sunshield/HDA Assembly Interface Control Drawing
- Component Interface Control Drawings
- Sunshield/HDA General Assembly Drawing
- Major Sub-Assembly Drawings
- Materials and Processes lists

3 AS BUILT DOCUMENTATION
- As Designed As Built Reconciliation (ABCL)
- Waivers List, Status and Implemented Waivers
- Major Non-Conformance Reports
- Test Procedures Reports
- Test Reports
- Test Certificate

4 LOG BOOK
- Build Event Log
- Test Event log
- Hazardous Items sheets (If applicable)
- Limited Life Log
- Running Time Log (If applicable)
- Contamination and Cleanliness Records

5 OTHER
- Open Item Register
- User Manuals
- Safety, Handling, Packing, Transportation Precautions and Procedures

SCOPE

The purpose of this data pack is to define and reconcile the design and build standard of the HIRDLS Sunshield HDA Assembly Flight Model (FM) The pack identifies, where applicable, all physical and functional non-compliance's and any additional information required for the next sequence of operations.

The package is part of the deliverable documentation requirement defined in Statement of Work PM-RAL-098A on Contract No N2A 3R 0386

The purpose of the Sunshield / HDA Assembly is to shield the instrument optics from direct sunlight and to reduce the levels of solar and earth albedo heat fluxes entering the optical viewing aperture. It comprises a fixed panel which provides the subsystem interface, a moveable door with associated drive mechanism, a hold-down / release mechanism, and sun sensors

DISTRIBUTION LIST

INTERNAL	EXTERNAL
I K Stewart	N Morris (RAL)
R Coupe	
N Crossland	

CHANGE RECORD

CHANGE NUMBER	CLASS	CHANGE DETAILS	ISSUE
3164-	-	First Issue	1

1

SECTION 1

Certificate of Conformity

MATRA MARCONI SPACE UK LIMITED

To:N. Morris

Rutherford Appleton Laboratories

Space Science Department

Chilton, Didcot, OXON

OX11 0QX

ANCHORAGE ROAD,
PORTSMOUTH, HAMPSHIRE,
ENGLAND PO3 5PU
Telex: 86666 Fax: (023) 9270 8282
Telephone: Portsmouth (023) 9270 5331

CERTIFICATE OF CONFORMITY

UK Defence Contractor List No. 55700/1/04

SERIAL No: 35952

DAMAGE AND SHORTAGE.
Claims for damage or shortage will not be entertained unless made in writing to ourselves within 3 days of receipt of goods.

NON DELIVERY·
Carriers and ourselves to be advised in writing as follows:
i. Within 3 days from date of dispatch by POST
ii. Within 23 days from date of dispatch by ROAD
iii. Within 14 days from date of dispatch by RAIL

DATE OF DESPATCH	CONTRACT No.	SUBCONTRACT OR ORDER No.	WORKS ORDER No.	MEANS OF DESPATCH	DRN No.
6-12-99	N2A 3R 0386			Customer Transport	

ITEM	FULL DESCRIPTION AND SERIAL No.	DRAWING AND/OR SPEC No.	ISS No.	QTY	BATCH No.	REMARKS
1	RAL transport container containing STH and SSH	3164-SS001-02-F & HR1L100	4 & 4	1	226107 & 170717	Flight hardware shipped to RAL for bake out.
2	RAL SSH Transport case ans SSH Transit frame			1		Return of customer property
3	RAL Turnover stand	AO-KE-0124-380-01		1		Return of customer property
4	RAL Lifting frame	AO-KE-0124-100#1		1		Return of customer property
5	Ball drill template	T128970-504		1		Return of customer property
6	LMMS Prototype Isolators	70432-1		3		Return of customer property
7	KM Mount aluminium vibration adaptor blocks			7		Test tools
8	SSH Composite Panel			1		Test tool
9	MMS Transports case containing Thermal blankets	3164-TH001-XXX		2	13028	Flight hardware shipped to RAL for bake out

CERTIFICATION

Certified that the whole of the supplies detailed hereon, unless otherwise stated above, conform in all respects to the specifications, drawing and contract/order relative thereto.

(Signed) Quality Manager A.J.FOOT Date 3-12-99

* ** ***

For and on behalf of MATRA MARCONI SPACE UK LIMITED

NOTES
* This certificate must be signed to be valid
** Delete as appropriate
*** Insert title as appropriate

SECTION 1

Minutes of Delivery Review Board (DRB)

2

SECTION 2

As Designed Configuration Item Data List (CIDL)

ORIGINAL WHEN RED

HIRDLS

DW-MMS-436
(3164-SA001-21-F)
Issue 1

HIGH RESOLUTION DYNAMICS LIMB SOUNDER

Originator A J Stewart Date 22/02/99

Subject/Title **Flight Model (FM) Sunshield Assembly Drawing Tree and List**

Description/Summary/Contents.

The purpose of this document is to define the design drawing tree and drawing list of the Flight model Sunshield assembly (HR1L100), which is part of the SSH subsystem

This issue is a preliminary to the flight design, and identifies modifications instigated by MMS to improve manufacturability and assembly, and also includes HIRDLS project changes, as defined in MMS/RAL Phase 3 contract agreements This document will be updated to reflect the actual flight design on completion of the Phase 3 design phase

Keywords HIRDLS, Flight, Sunshield, Design

Purpose of this Document Definition of Sunshield assembly drawing tree and list

Reviewed/Approved by:			
Date (yy-mm-dd):	99-02-25		

Rutherford Appleton Laboratory
Chilton
Didcot
Oxfordshire
OX11 0QX
United Kingdom

Matra Marconi Space UK
Anchorage Road
Portsmouth
Hants PO3 5PU
United Kingdom

EOS

FLIGHT MODEL (FM)
SUNSHIELD ASSEMBLY
DRAWING TREE AND LIST

DW-MMS-436

Responsible Engineer _____ Date. 22/2/99

Quality Assurance _____ Date 24-2-99

Project Manager. _____ Date 24/2/99

© MATRA MARCONI SPACE UK LIMITED

THE COPYRIGHT IN THIS DOCUMENT IS THE PROPERTY OF MATRA MARCONI SPACE UK LIMITED This document is supplied by Matra Marconi Space UK Limited on the express terms that it is to be treated as confidential and that it may not be copied, used or disclosed to others for any purpose except as expressly authorised under the terms of Contract No N2A 3R 0386

Any person, other than the authorised holder, who finds or otherwise obtains possession of the document, should post it, together with his/her name and address, to the Registry, Matra Marconi Space UK Limited, Anchorage Road, Portsmouth, England, PO3 5PU Postage will be refunded

CONTENTS

1. SCOPE 4

2. APPLICABLE DOCUMENTS 4

APPENDICES

APPENDIX A FM SUNSHIELD ASSEMBLY DRAWING TREE 5

APPENDIX B FM SUNSHIELD ASSEMBLY DRAWING LIST 8

DISTRIBUTION LIST 12

CHANGE RECORD 12

1. SCOPE

This document defines the design drawing tree and drawing list of the Flight model Sunshield assembly (HR1L100), which is part of the SSH subsystem

This issue is a preliminary to the flight design, and identifies modifications instigated by MMS to improve manufacturability and assembly, and also includes HIRDLS project changes, as defined in MMS/RAL Phase 3 contract agreements This document will be updated to reflect the actual flight design on completion of the Phase 3 design phase

2. APPLICABLE DOCUMENTS

The latest issues of the following documents were applicable at the date of issue of this document

AD1	Sunshield Subsystem Requirements Specification	SP-HIR-50
AD2	Sunshield Interface Control Drawing	DW-MMS-307 (3164-SA001-25-0)

APPENDIX A FM SUNSHIELD ASSEMBLY DRAWING TREE

DRAWING NUMBER	TITLE	QTY
HR1L100	SUNSHIELD/HDA ASSEMBLY	1
-- 3164-SA005-04-0	DOOR ASSEMBLY	1
-- 3164-SA016-20-3	PANEL INSERT (TYPE 6)	1
-- 3924-ES003-20-3	REFLECTOR GROUNDING STUD (M4)	1
-- 3924-SW022-20-3	REFLECTOR GROUNDING WASHER (M4)	1
-- 3164-SS047-TPZ	ELEC BONDING RESISTANCE TEST PROC	REF
-- 3164-SA006-04-0	APERTURE PLATE AND CLEAT ASSEMBLY	1
-- 3164-SA007-04-0	APERTURE PLATE ASSEMBLY	1
-- 3164-SA011-20-3	PANEL INSERT (TYPE 1)	1
-- 3924-CL001-04-3	T300/3K CARBON LAMINATE	1
-- 3164-SA012-20-3	PANEL INSERT (TYPE 1)	1
-- 3924-CL001-04-3	T300/3K CARBON LAMINATE	1
-- 3164-SA013-20-3	PANEL INSERT (TYPE 1)	1
-- 3924-CL001-04-3	T300/3K CARBON LAMINATE	1
-- 3164-SA014-20-3	PANEL INSERT (TYPE 1)	1
-- 3924-CL001-04-3	T300/3K CARBON LAMINATE	1
-- 3164-SA015-20-3	PANEL INSERT (TYPE 1)	1
-- 3924-CL001-04-3	T300/3K CARBON LAMINATE	1
-- 3924-ES004-20-3	4MM COMPOSITE PANEL GROUNDING STUD	1
-- 3924-SW022-20-3	REFLECTOR GROUNDING WASHER (M4)	1
-- 3164-SS047-TPZ	ELEC. BONDING RESISTANCE TEST PROC	REF
-- 3164-SX023-20-3	SPECIAL CLEAT (115°)	6
-- 3164-SX034-20-3	STUD (APERTURE PLATE)	8
-- 3164-SX037-20-3	SPECIAL CLEAT (77°)	2
-- 3164-SX038-20-3	SPECIAL CLEAT (103°)	3
-- 3164-SX039-20-3	SPECIAL CLEAT (90°)	5
-- 3164-SX040-20-3	LATCH SUPPORT BRACKET	2
-- HR1L006	HINGE ASSEMBLY (POTENTIOMETER)	1
-- HR1L004	POTENTIOMETER ICD	1
-- HR1L008	HINGE BRACKET (POTENTIOMETER)	1
-- HR1L010	BEARING RETAINER	1
-- HR1L012	HINGE PIN (POTENTIOMETER)	1
-- HR1L013	SPACER	2
-- HR1L014	SPECIAL WASHER (POTENTIOMETER)	1
-- HR1L007	HINGE ASSEMBLY (MOTOR)	1
-- HR1L002	ASTRO MOTOR ICD	1
-- HR1L003	PANAMECH COUPLING ICD	1
-- HR1L009	HINGE BRACKET (MOTOR)	1
-- HR1L010	BEARING RETAINER	1
-- HR1L011	HINGE PIN (MOTOR)	1
-- HR1L013	SPACER	2
-- HR1L015	DRIVE COUPLING (MOTOR)	1
-- HR1L016	CAPSCREW (SPECIAL)	4
-- HR1L030	MOUNTING BRACKET	1

DRAWING NUMBER	TITLE	QTY
-- HR1L031	LEVER	1
-- HR1L032	SPRING RETAINER	1
-- HR1L033	BEARING RETAINER	1
-- HR1L034	SPIGOT	1
-- HR1L035	SCREW STOP	4
-- HR1L036	SHAFT END	1
-- HR1L037	BEARING RETAINER	1
-- HR1L038	SHAFT	1
-- HR1L039	PACKER	1
-- HR1L042	SHAFT TIP	1
-- HR1L043	SPRING (CATCH)	1
-- HR1L044	CATCH (RETAINER)	1
-- HR1L045	SPACER	1
-- HR1L046	WAVED WASHER	1
-- HR1L047	PLATE	1
-- HR1L048	TORSION SPRING (RH WOUND)	1
-- HR1L049	TORSION SPRING (LH WOUND)	1
-- HR1L051	SPRING RETAINER	1
-- HR1L053	HOP ACTUATOR ICD	1
-- HR1L017	SCREW STOP	1
-- HR1L018	HINGE CLEVIS (MOTOR)	1
-- HR1L021	HINGE CLEVIS (POTENTIOMETER)	1
-- HR1L023	SHIM SET	1
-- HR1L025	SHIM SET	1
-- HR1L024	HDRM ASSEMBLY	1
-- HR1L050	SHIM SET	1
-- HR1L054	PACKER	1
-- HR1L070	LATCH PLATE	1
-- HR1L071	VEE LOCATOR	1
-- HR1L072	WASHER	1
-- HR1L073	SHIM PACK	1
-- HR1L075	HDA PANEL/SEAL ASSEMBLY	1

APPENDIX B FM SUNSHIELD ASSEMBLY DRAWING LIST

DRAWN PARTS

DRAWING NUMBER	CUSTOMER NUMBER	DRAWING DESCRIPTION	QTY NO	ISSUE N0
HR1L001	N/A	HINGE ASSEMBLY ICD	1	1
HR1L002	N/A	ASTRO MOTOR ICD	1	1
HR1L003	N/A	PANAMECH COUPLING ICD	1	1
HR1L004	N/A	POTENTIOMETER ICD	1	1
HR1L006	N/A	HINGE ASSEMBLY (POTENTIOMETER)	1	3
HR1L007	N/A	HINGE ASSEMBLY (MOTOR)	1	1
HR1L008	N/A	HINGE BRACKET (POTENTIOMETER)	1	1
HR1L009	N/A	HINGE BRACKET (MOTOR)	1	1
HR1L010	N/A	BEARING RETAINER	2	1
HR1L011	N/A	HINGE PIN (MOTOR)	1	1
HR1L012	N/A	HINGE PIN (POTENTIOMETER)	1	2
HR1L013	N/A	SPACER	4	1
HR1L014	N/A	SPECIAL WASHER	1	2
HR1L015	N/A	DRIVE COUPLING	1	1
HR1L016	N/A	CAPHEAD SCREW	4	1
HR1L017	N/A	SCREW STOP	1	1
HR1L018	N/A	HINGE CLEVIS (MOTOR)	1	1
HR1L019	N/A	HINGE LAYOUT REF	REF	1
HR1L020	N/A	HDRM LAYOUT REF	REF	1
HR1L021	N/A	HINGE CLEVIS (POTENTIOMETER)	1	1
HR1L023	N/A	SHIM SET	1	1
HR1L024	N/A	HDRM ASSEMBLY	1	2
HR1L025	N/A	SHIM SET	1	1
HR1L026	N/A	GUIDE PAD (GROUNDING WIRE)	1	1
HR1L027	N/A	GUIDE PAD (GROUNDING WIRE)	1	1
HR1L028	N/A	GROUNDING WIRE	1	2
HR1L029	N/A	MOUNTING SPOOL (GROUNDING WIRE)	1	1
HR1L030	N/A	MOUNTING BRACKET	1	2
HR1L031	N/A	LEVER	1	2
HR1L032	N/A	SPRING RETAINER	1	1
HR1L033	N/A	BEARING RETAINER	1	2
HR1L034	N/A	SPIGOT	1	1
HR1L035	N/A	SCREW STOP	4	1
HR1L036	N/A	SHAFT END	1	1
HR1L037	N/A	BEARING RETAINER	1	1
HR1L038	N/A	SHAFT	1	2
HR1L039	N/A	PACKER	1	1
HR1L042	N/A	SHAFT TIP	1	2
HR1L043	N/A	SPRING (CATCH)	1	2
HR1L044	N/A	CATCH (RETAINER)	1	2
HR1L045	N/A	SPACER	1	1

DRAWING NUMBER	CUSTOMER NUMBER	DRAWING DESCRIPTION	QTY NO.	ISSUE N0
HR1L046	N/A	WAVED WASHER	1	1
HR1L047	N/A	PLATE	1	1
HR1L048	N/A	TORSION SPRING (RH WOUND)	1	2
HR1L049	N/A	TORSION SPRING (LH WOUND)	1	2
HR1L050	N/A	SHIM SET	1	1
HR1L051	N/A	SPRING RETAINER	1	1
HR1L052	N/A	HDRM ASSEMBLY ICD	1	1
HR1L053	N/A	HOP ACTUATOR ICD	1	2
HR1L054	N/A	PACKER	1	1
HR1L055	N/A	BUSH (SPECIAL)	4	1
HR1L070	N/A	LATCH PLATE	1	1
HR1L071	N/A	VEE LOCATOR	1	1
HR1L072	N/A	WASHER	1	1
HR1L073	N/A	SHIM PACK	1	1
HR1L075	N/A	HDA PANEL/SEAL ASSEMBLY	1	1
HR1L100	DW-MMS-216	SUNSHIELD/HDA ASSEMBLY	1	1

MMS PORTSMOUTH PARTS

DRAWING NUMBER	CUSTOMER NUMBER	DRAWING DESCRIPTION	QTY NO	ISSUE N0
3164-SA005-04-0	DW-MMS-243	DOOR ASSEMBLY	1	1
3164-SA006-04-0	DW-MMS-244	APERTURE PLATE AND CLEAT ASSEMBLY	1	1
3164-SA007-04-0	DW-MMS-245	APERTURE PLATE (DETAIL)	1	1
3164-SA011-20-3	DW-MMS-320	PANEL INSERT (TYPE 1)	1	1
3164-SA012-20-3	DW-MMS-321	PANEL INSERT (TYPE 2)	1	1
3164-SA013-20-3	DW-MMS-325	PANEL INSERT (TYPE 3)	1	1
3164-SA014-20-3	DW-MMS-327	PANEL INSERT (TYPE 4)	1	1
3164-SA015-20-3	DW-MMS-328	PANEL INSERT (TYPE 5)	1	1
3164-SA016-20-3	DW-MMS-331	PANEL INSERT (TYPE 6)	1	1
3164-SX023-20-3	DW-MMS-238	SPECIAL CLEAT (115°)	6	1
3164-SX034-20-3	DW-MMS-263	STUD (APERTURE PLATE)	8	A
3164-SX037-20-3	DW-MMS-269	SPECIAL CLEAT (77°)	2	1
3164-SX038-20-3	DW-MMS-270	SPECIAL CLEAT (103°)	3	1
3164-SX039-20-3	DW-MMS-271	SPECIAL CLEAT (90°)	5	1
3164-SX040-20-3	DW-MMS-272	LATCH SUPPORT BRACKET	2	A
3164-SS047-TPZ	TP-MMS-335	ELECTRICAL BONDING RESISTANCE TEST PROCEDURE	REF	1

COMMON PARTS

DRAWING NUMBER	CUSTOMER NUMBER	DRAWING DESCRIPTION	QTY NO	ISSUE N0.
3924-ES003-20	N/A	REFLECTOR GROUNDING STUD (M4)	1	1
3924-ES004-20	N/A	4MM COMPOSITE PANEL GROUNDING STUD (M4)	1	1
3924-SW022-20	N/A	REFLECTOR GROUNDING WASHER	2	1

DISTRIBUTION LIST

INTERNAL	EXTERNAL
I K Stewart	N Morris (RAL)
R Coupe	
T Forward	
A J Stewart	
N Crossland	
A Foot	
Project Library	

CHANGE RECORD

CHANGE NUMBER	CLASS	CHANGE DETAILS	ISSUE
3164-00210	-	First Issue	1

SECTION 2

SSH Interface Control Drawing DW-MMS-307

SERVICE DRAWING NO
DW-MMS-307

SHEET NO 1 OF 4

SECURITY CLASSIFICATION
UNCLASSIFIED

3rd ANGLE PROJECTION

USED ON
CONTROL DRAWING

ISSUES BEFORE CERTIFYING

CHK'D	ISS	A.N.NO
	A	00078
	B	00090
	C	00173

TRUE VIEW ON ARROW C
(SHT 3)

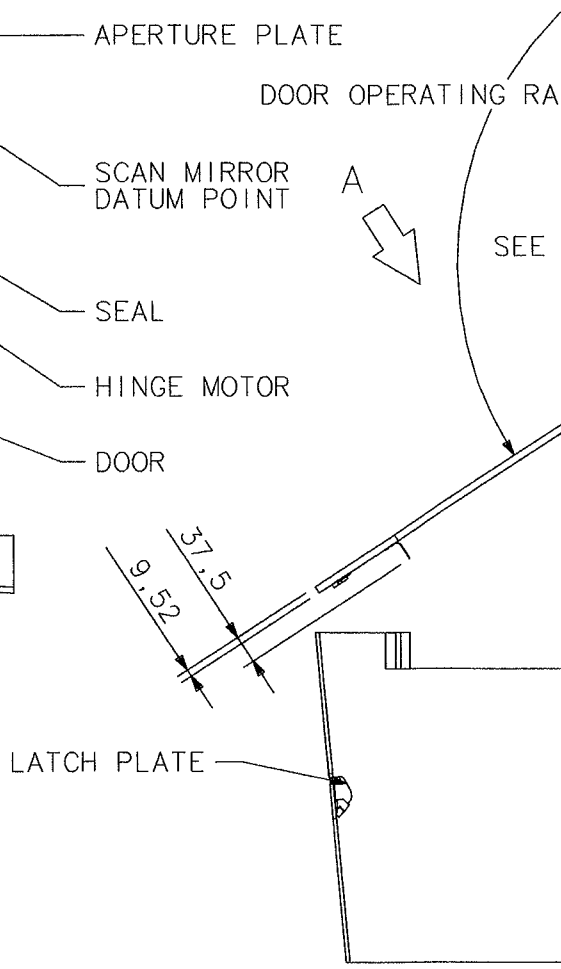

TRUE VIEW ON ARROWS D-D
(SHT 3)

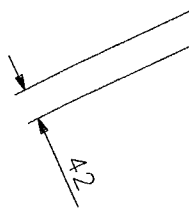

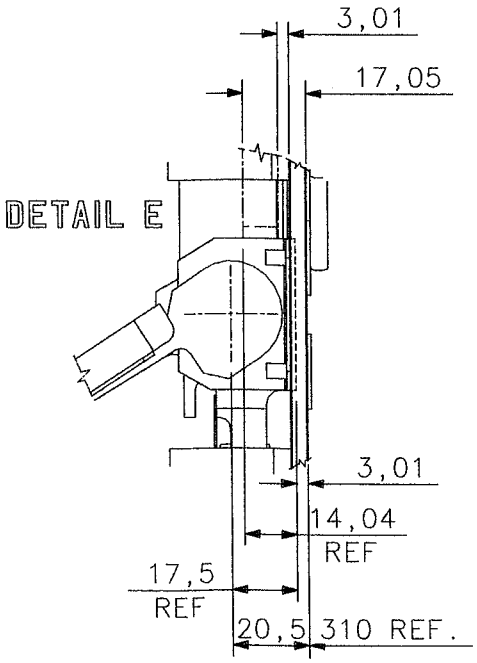

CAD MODEL
A.PHYPERS
16JAN98

DESIGN APPD
A STEWART
5/2/98

12/1/99

CERTIFIED

CHECKED
G1
A STEWART
5/2/98

DRAWN
A.PHYPERS
16JAN98

ISSUE	DATE	A N No	CHKD	ISSUE	DATE	A N No	CHKD
				01	16·11·99	00342	

COPYRIGHT:
MATRA MARCONI SPACE UK LTD

THE COPYRIGHT IN THIS DOCUMENT IS THE PROPERTY OF MATRA MARCONI SPACE UK LIMITED. THIS DOCUMENT IS SUPPLIED BY MATRA MARCONI SPACE ON THE EXPRESS TERMS THAT IT IS TO BE TREATED AS CONFIDENTIAL AND THAT IT MAY NOT BE COPIED, USED OR DISCLOSED TO OTHERS FOR ANY PURPOSE EXCEPT AS AUTHORISED IN WRITING BY THIS COMPANY

SERVICE DRAWING NO	SHEET NO 2 OF 4
DW-MMS-307	

SECURITY CLASSIFICATION
UNCLASSIFIED

3rd ANGLE PROJECTION

USED ON

CONTROL DRAWING

ISSUES BEFORE CERTIFYING

CHK'D	ISS	A.N.NO
	A	00078
	B	00090
	C	00173

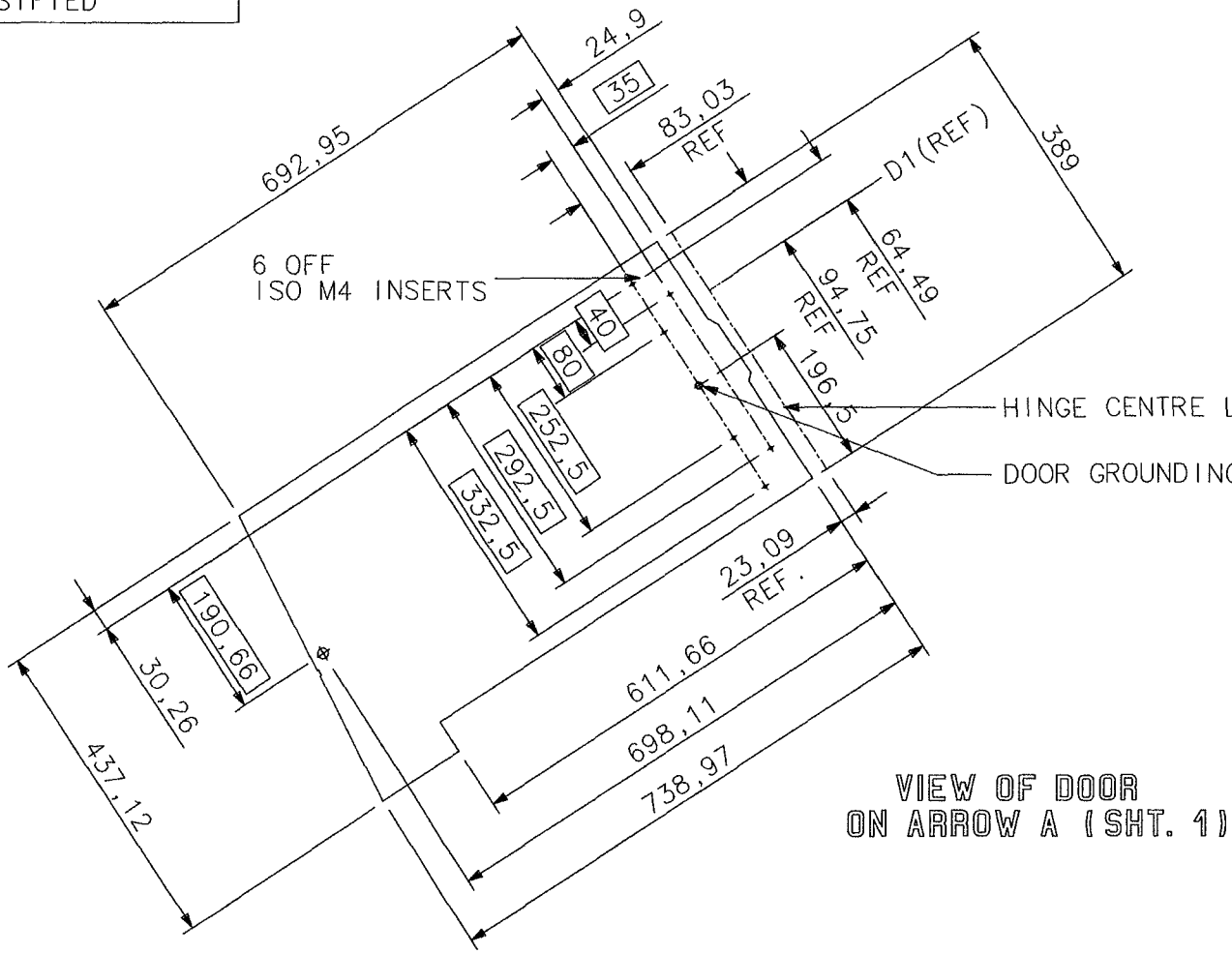

NOTES:

1 STRUCTURE AND THERMAL INTERFACES IN ACCORDANCE WITH SPECIFICATION NO'S 3164-SA001-SPY (SP-HIR-050) AND SP-HIR-200G

2 STRUCTURE CONSTRUCTION - CFRP SKINNED ALUMINIUM HONEYCOMB PANELS

3 COMPONENT MOUNTING INTERFACE :

HINGE / APERTURE PLATE INTERFACE - ISO M4 ST.STEEL STUDS.
HINGE / DOOR INTERFACE - ISO M4 THREADED INSERTS
LATCH INTERFACE - ISO M4 THREADED BRACKET

POSITIONAL TOLERANCE AS SHOWN IN SHEET 3

4 GROUNDING OF THE SUBSYSTEM IS VIA THE GROUNDING POINTS SHOWN AND ALSO THROUGH THE SSH HARNESS EARTH LINE TO EXTERNAL CONNECTORS J211P AND J212P. GROUNDING OF THE HDRM IS SPECIFICALLY VIA THE TITANIUM SUPPORT BRACKETS TO THE STH (POINTS D1-D4) AND THE HARNESS EARTH LINE

5 VENTING OF THE APERTURE PLATE IS VIA ∅2 HOLES POSITIONED ALONG THE +Y, +Z AND -Z PANEL EDGES (AS SHOWN) AT INTERVALS OF 20 mm

6 REFERENCE 'R'HOLE (SHEET 4) IRCF POSITION IS X= 1438,25 Y= 1138,01 Z= 1117,63

7 HOLE REFERENCE POSITIONS ON SHEETS 2 & 3 ARE SHOWN WITH RESPECT TO THE LOCAL REFERENCE COORDINATE FRAME (LRCF)

8 THE LOCATION OF THE OPTICAL SENSORS ARE SHOWN IN TABLE 3

9 REFER TO DRAWING DW-MMS-268 FOR SVA MASS DETAILS SSH CENTRE OF GRAVITIES ARE WITH RESPECT TO THE LRCF 'R' HOLE INERTIAL PROPERTIES ARE WITH RESPECT TO THE SSH SUBSYSTEM CENTRE OF MASS

10 THE HOLE POSITIONS DEFINED IN TABLES 1 TO 4 ARE COINCIDENT WITH THE INNER SURFACE OF THE APERTURE PLATE FOR THE A3 AXIS

CAD MODEL
A.PHYPERS
16.JAN98

DESIGN APPD
A STEWART
5/2/98

12/1/99

CERTIFIED

CHECKED
G1
A STEWART
5/2/98

DRAWN
A.PHYPERS
16.JAN98

ISSUE	DATE	A N No	CHKD	ISSUE	DATE	A N No
				01	16-11-99	00342

COPYRIGHT:
MATRA MARCONI SPACE UK LTD

THE COPYRIGHT IN THIS DOCUMENT IS THE PROPERTY OF MATRA MARCONI SPACE UK LIMITED. THIS DOCUMENT IS SUPPLIED BY MATRA MARCONI SPACE ON THE EXPRESS TERMS THAT IT IS TO BE TREATED AS CONFIDENTIAL AND THAT IT MAY NOT BE COPIED, USED OR DISCLOSED TO OTHERS FOR ANY PURPOSE EXCEPT AS AUTHORISED IN WRITING BY THIS COMPANY

SERVICE DRAWING NO
DW-MMS-307

SHEET NO 3 OF 4

3rd ANGLE PROJECTION

SECURITY CLASSIFICATION
UNCLASSIFIED

USED ON

CONTROL DRAWING

ISSUES BEFORE CERTIFYING

CHK'D	ISS	A.N.NO
	A	00078
	B	00090
	C	00173

TABLE 1
APERTURE PROFILE

IDENT	A1	A2
A1	411,80	649,14
A2	232,41	-224,45
A3	636,24	-213,98
A4	241,33	-179,07
A5	620,14	-166,84
A6	410,66	448,93

TABLE 2
HINGE FIXING POSITIONS

IDENT	A1	A2
B1	781,06	-335,37
B2	781,06	-269,87
B3	781,06	-106,87
B4	781,06	-37,87
B5	751,06	-37,87
B6	751,06	-106,87
B7	751,06	-269,87
B8	751,06	-335,37

SUN

IDENT
C1
C2
C3

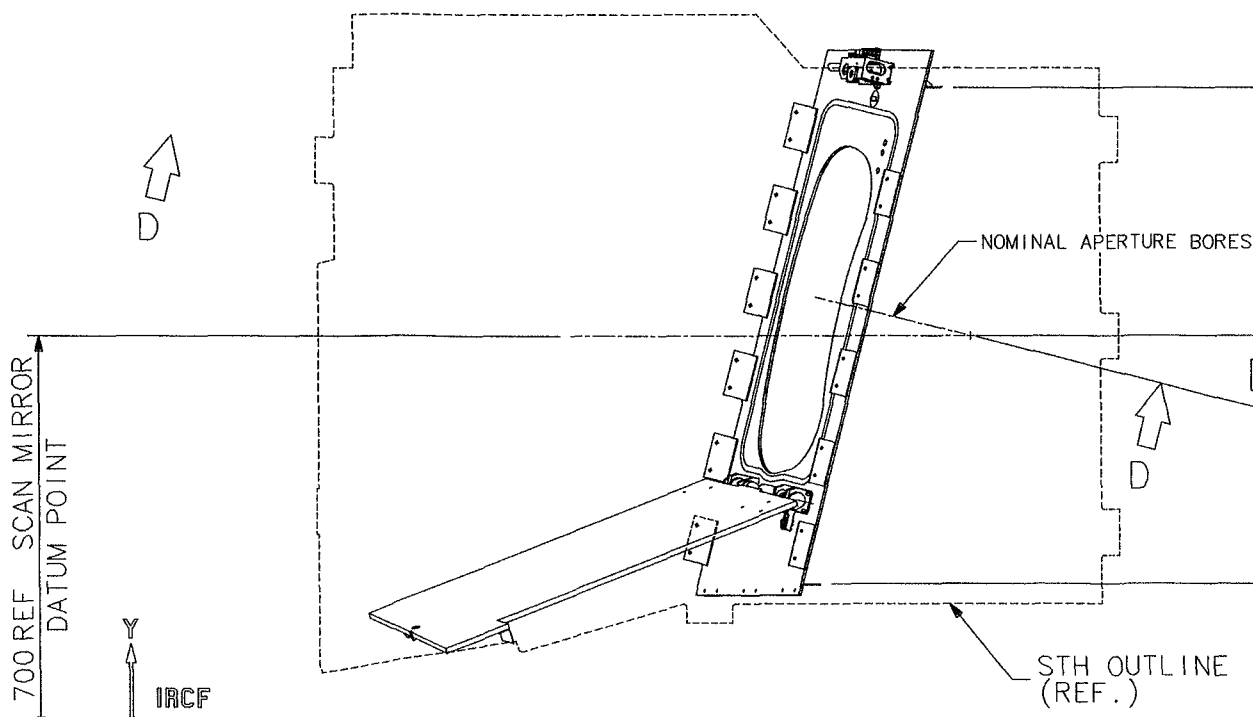

VIEW IN -Z DIRECTION

CAD MODEL
A.PHYPERS
16JAN98

DESIGN APPD
A STEWART
5/2/98

CERTIFIED

CHECKED
G1
A STEWART
5/2/98

DRAWN
A.PHYPERS
16JAN98

ISSUE	DATE	A N No	CHKD	ISSUE	DATE	A N No	CH
				01	16-11-99	00342	

COPYRIGHT:
MATRA MARCONI SPACE UK LTD

THE COPYRIGHT IN THIS DOCUMENT IS THE PROPERTY OF MATRA MARCONI SPACE UK LIMITED. THIS DOCUMENT IS SUPPLIED BY MATRA MARCONI SPACE ON THE EXPRESS TERMS THAT IT IS TO BE TREATED AS CONFIDENTIAL AND THAT IT MAY NOT BE COPIED, USED OR DISCLOSED TO OTHERS FOR ANY PURPOSE EXCEPT AS AUTHORISED IN WRITING BY THIS COMPANY

SERVICE DRAWING NO	SHEET NO 4 OF 4
DW-MMS-307	
SECURITY CLASSIFICATION	
UNCLASSIFIED	

3rd ANGLE PROJECTION

0 250 M

USED ON

ISSUES BEFORE CERTIFYING		
CHK'D	ISS	A.N.NO
	C	00173

SSH REFERENCE HOLE LRCF COORDINATE AXES

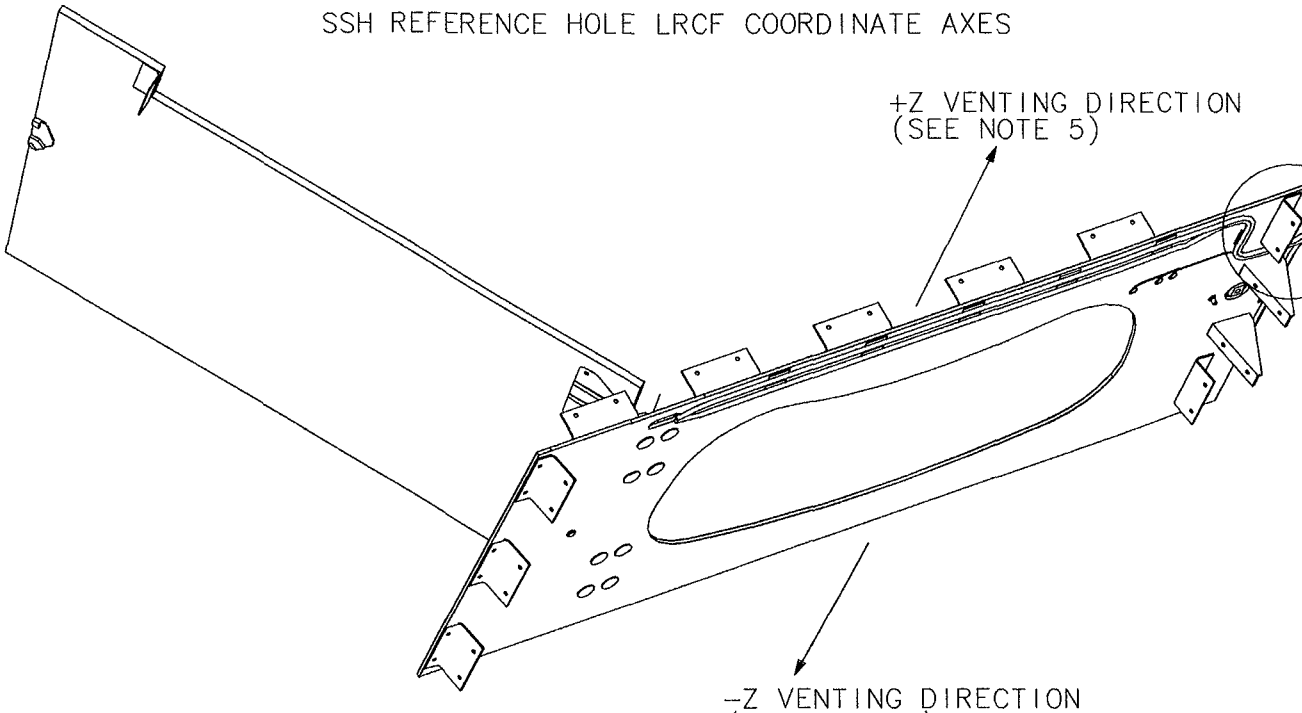

NOTE

A1/A2 PLANE IS IN THE PLANE OF THE APERTURE PLATE WHERE A1 IS PARALLEL TO THE TOP EDGE OF THE PLATE

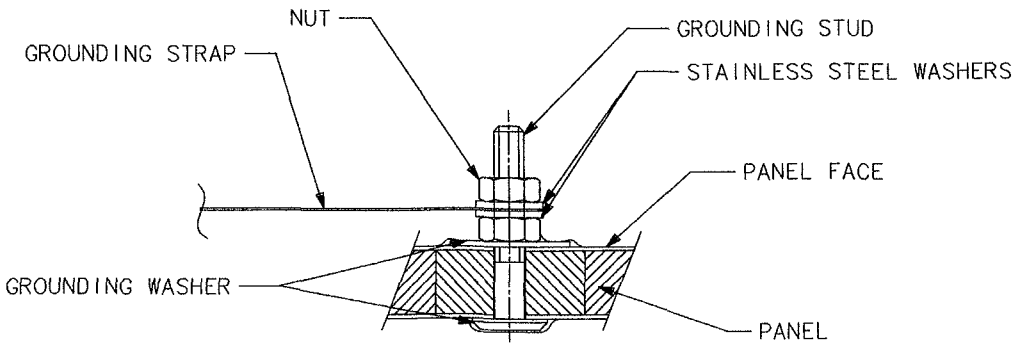

SECTION THROUGH A TYPICAL INTER-PANEL GROUNDING POINT

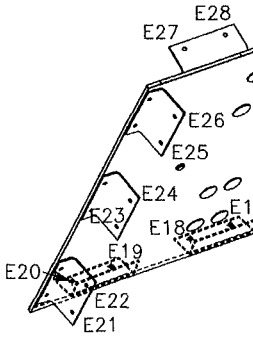

CAD MODEL

DESIGN APPD 12/11/99

CERTIFIED

CHECKED

DRAWN C.BRYAN NOV 98

ISSUE	DATE	A N No	CHKD	ISSUE	DATE	A N No	CHKD
				01	16 11.99	00342	

COPYRIGHT:
MATRA MARCONI SPACE UK LTD

THE COPYRIGHT IN THIS DOCUMENT IS THE PROPERTY OF MATRA MARCONI SPACE UK LIMITED. THIS DOCUMENT IS SUPPLIED BY MATRA MARCONI SPACE ON THE EXPRESS TERMS THAT IT IS TO BE TREATED AS CONFIDENTIAL AND THAT IT MAY NOT BE COPIED, USED OR DISCLOSED TO OTHERS FOR ANY PURPOSE EXCEPT AS AUTHORISED IN WRITING BY THIS COMPANY

SERVICE DRAWING NUMBER/SHEET NO ——

3rd ANGLE PROJECTION

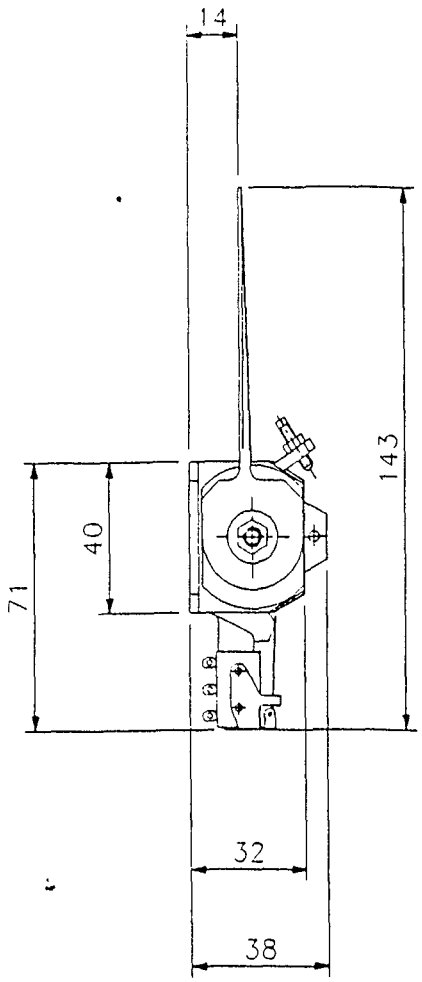

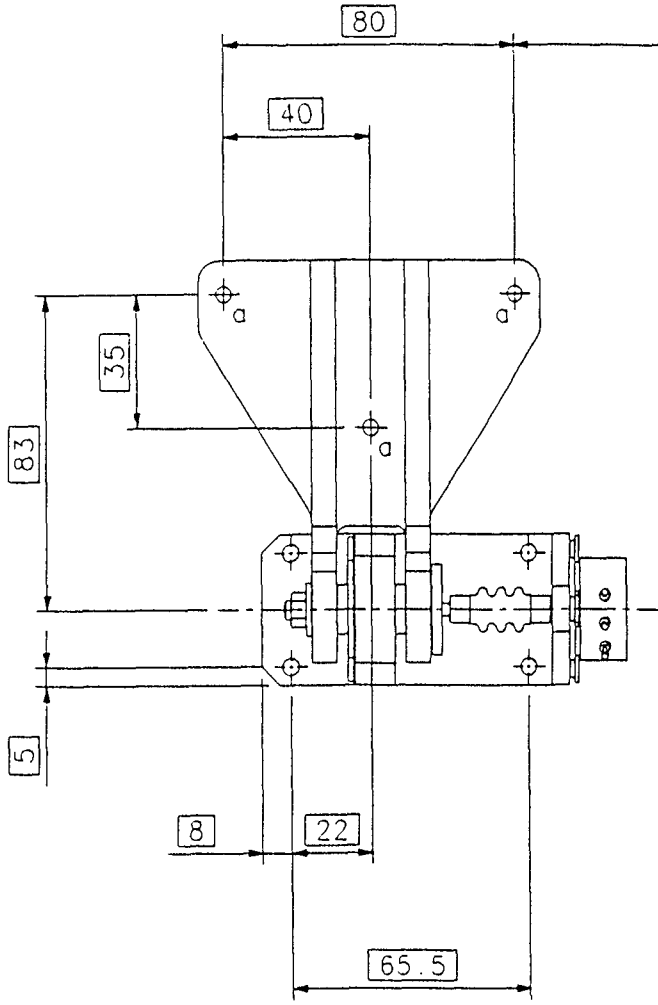

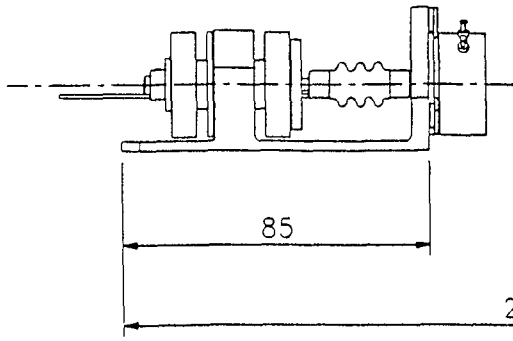

~~SEE ASSOCIATED BILL OF MATERIAL~~	ORIGINAL SCALE 1:1	
UNLESS OTHERWISE STATED STANDARD MANUFACTURING REQUIREMENTS TO ARE MANDATORY	UNLESS OTHERWISE STATED UNIT OF MEASUREMENT: MILLIMETRES	
MATERIAL	FORM	PROTECTIVE FINISH
----	----	----
	SPEC ----	SPEC ----

SPACE

STAN

HANDLE

STEP	YELLOW	RED	WHITE
1	+	—	N/C
2	N/C	—	+
3	—	N/C	+
4	—	+	N/C
5	N/C	+	—
6	+	N/C	—

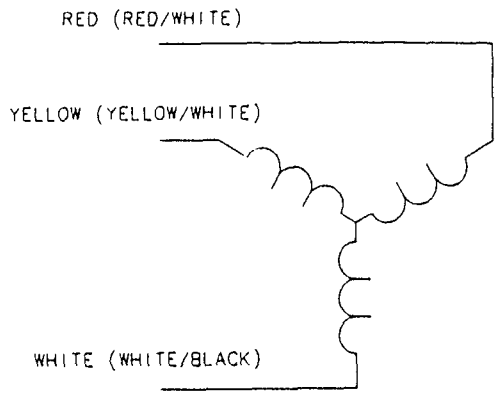

REDUNDANT WIRING COLOR CODE IN PARANTHESES

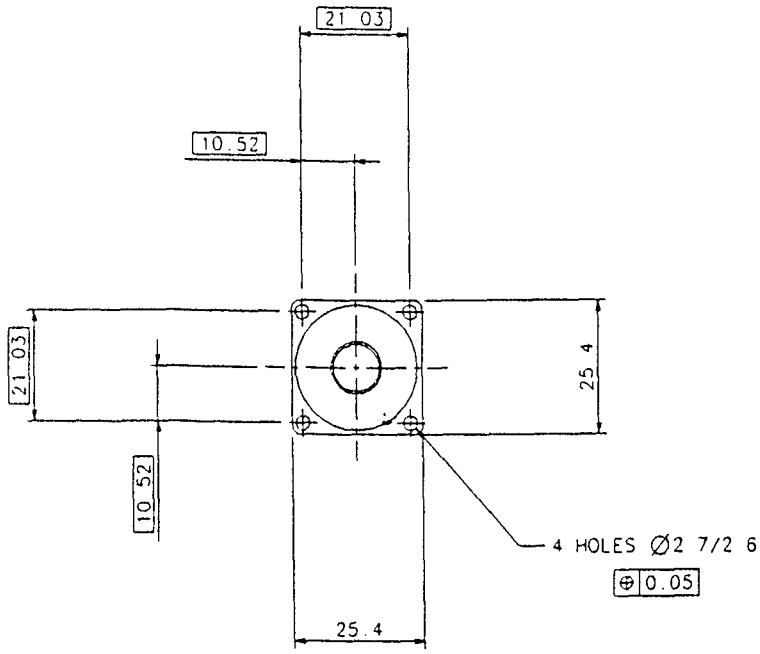

NOTES

1 THIS ITEM MUST MEET THE REQUIREMENTS OF SPEC SP-MMS-354

2 THIS ITEM MUST BE SERIALISED

3 SUPPLIED BY :----
ASTRO INSTRUMENT CORPORATION
DEERFIELD FLORIDA

4 FLYING LEADS TO BE IDENTIFIED AS PER WIRING DIAGRAM

~~SEE ASSOCIATED BILL OF MATERIAL~~	ORIGINAL SCALE 2:1
UNLESS OTHERWISE STATED STANDARD MANUFACTURING REQUIREMENTS TO DS700 ARE MANDATORY	UNLESS OTHERWISE STATED UNIT OF MEASUREMENT: MILLIMETRES

MATERIAL	FORM	PROTECTIVE FINISH
—	—	—
	SPEC —	SPEC —

SERVICE DRAWING NUMBER/SHEET NO ———

3rd ANGLE PROJECTION

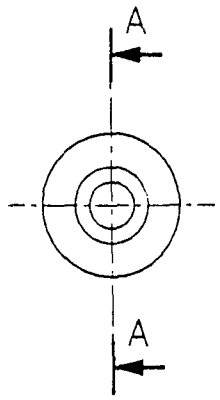

Ø 10.018
10.000

NOTES

1 SUPPLIED BY ----
HINCHLIFFE PRECISION COMPONENTS LTD
CHESTERFIELD ENGLAND

2 ALL OTHER DIMENSIONS TO BE AS BS 34

3 MATERIAL ----- STAINLESS STEEL

~~SEE ASSOCIATED BILL OF MATERIAL~~	ORIGINAL SCALE 2 1	
UNLESS OTHERWISE STATED STANDARD MANUFACTURING REQUIREMENTS TO DS700 ARE MANDATORY	UNLESS OTHERWISE STATED UNIT OF MEASUREMENT: MILLIMETRES	
MATERIAL	FORM	PROTECTIVE FINISH
----	---- SPEC ----	---- SPEC ----

THIS PART MUST BE WEIGHED AND THE WEIGHT RECORDED IN ACCORDANCE WITH EP55

SPACEC

STAND
HANDLE AN

SERVICE DRAWING NUMBER/SHEET NO

3rd ANGLE PROJECTION

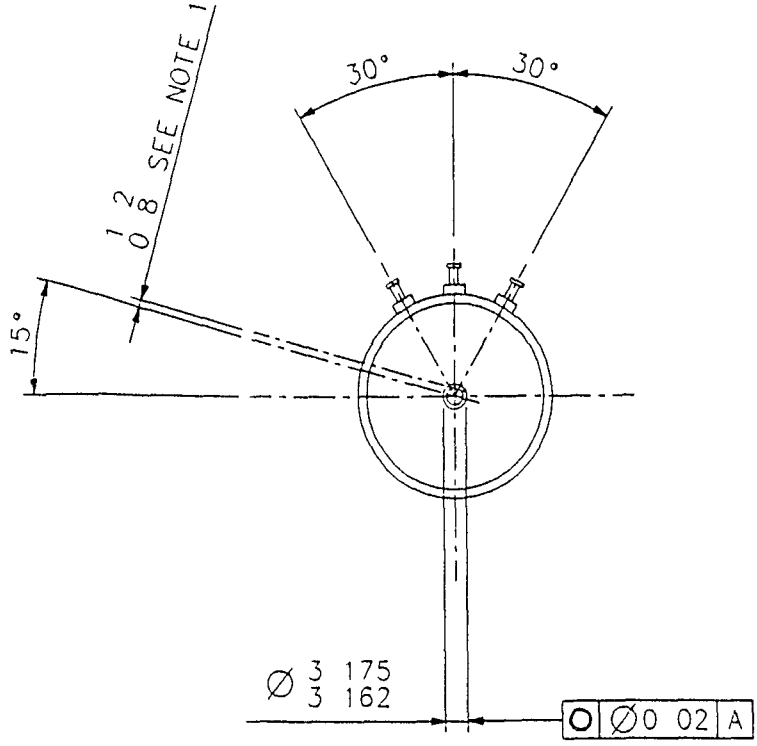

NOTE

1 FLAT MUST BE ORIENTATED AS SHOWN WHEN POTENTIOMETER IS AT MID TRAVEL

2 THIS ITEM MUST MEET THE REQUIREMENTS OF SPEC SP-MMS-357

3 SUPPLIED BY ----
BETATRONIX INC
CUSTOM PRECISION POTENTIOMETERS
110 NICON COURT
HAUPPAUGE NY

~~SEE ASSOCIATED BILL OF MATERIAL~~	ORIGINAL SCALE 2 1	
UNLESS OTHERWISE STATED STANDARD MANUFACTURING REQUIREMENTS TO ARE MANDATORY	UNLESS OTHERWISE STATED UNIT OF MEASUREMENT: MILLIMETRES	
MATERIAL ----	FORM ---- SPEC ----	PROTECTIVE FINISH ---- SPEC ----

THIS PART MUST BE WEIGHED AND THE WEIGHT RECORDED IN ACCORDANCE WITH EP55

SPACE

STAN

HANDLE A

SECTION 2

Sunshield / HDA
General Assembly Drawing HR1L100

SERVICE DRAWING NUMBER/SHEET NO. _____ | 3rd ANGLE PROJECTION

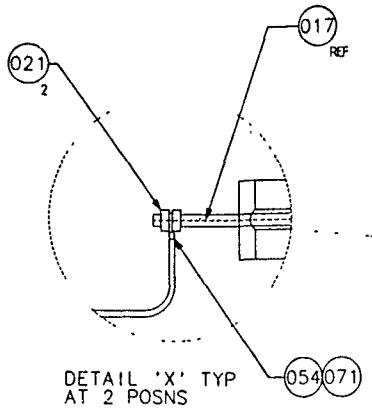

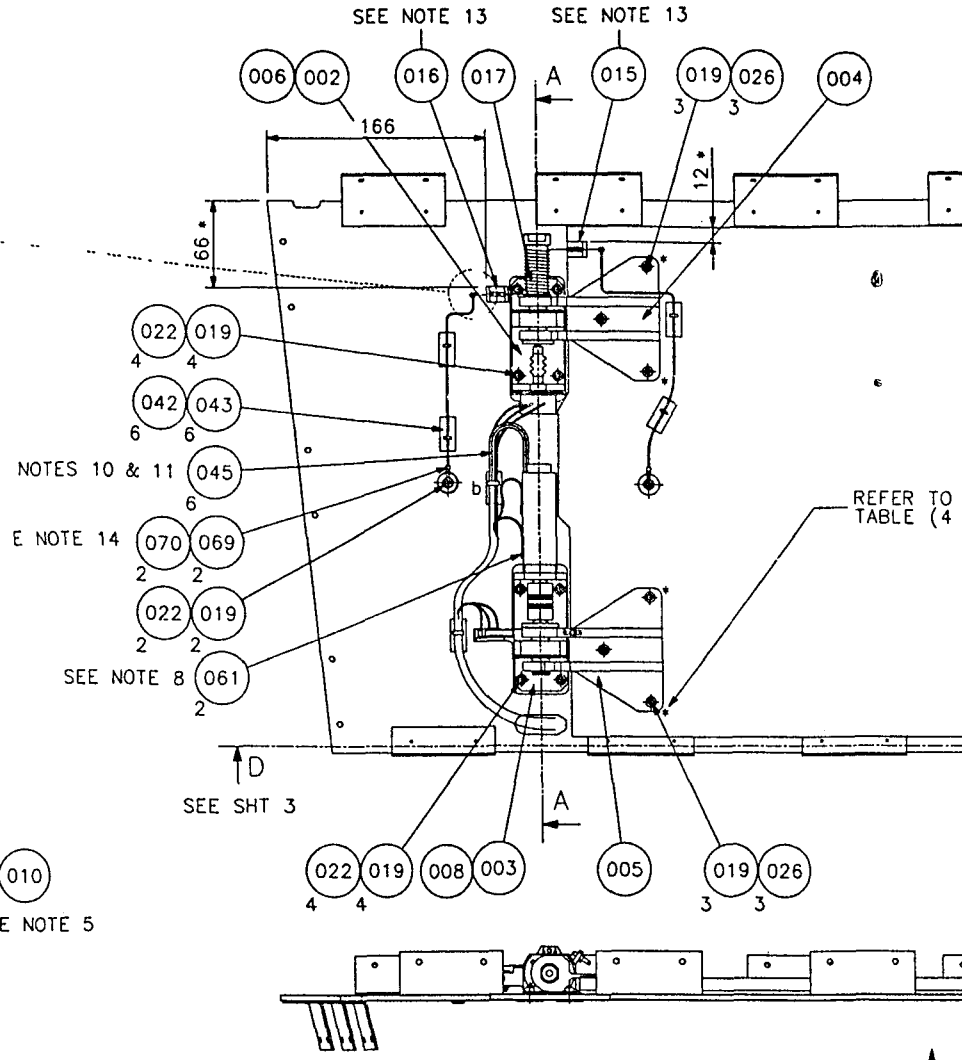

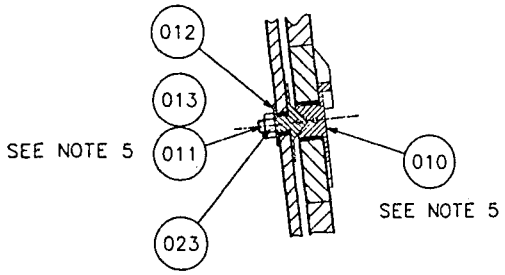

SECTION BB

SEE SH

NOTES

1 CLEANINESS STANDARD TO PS2058 GRADE 2X

2 TORQUE TIGHTEN ITEMS AS SHOWN IN TABLE BELOW TO THE REQUIREMENTS OF PS2039 APPENDIX A USING THE VALUES LISTED BELOW

ITEM NO	RUNNING TORQUE (Nm)	PRE TENSION TORQUE (Nm)	MAXIMUM TORQUE (Nm)
022	-	2.1 - 2.2	2.2
023	-	2.0 - 2.2	2.2
026	-	2.1 - 2.2	2.2
026*	-	0.9 - 1.0	1.0
027	-	2.1 - 2.2	2.2
030	-	0.45 - 0.55	0.55
034	-	0.45 - 0.55	0.55

3 DRILL & REAM 1 HOLE THROUGH PANAMECH COUPLING HR1L005 AND DRIVE COUPLING HR1L015 ∅2 997/2.987 TO SUIT ITEM 032 SEE ASSEMBLY PROCEDURE DW-MMS-388

4 LOCK ITEMS IN ABOVE TABLE USING ITEMS 050,051,& 052 IN ACCORDANCE WITH PS2024 MIX 36

5 POT ITEMS 010 & 011 USING ITEMS 050,051,& 052.AFTER POSITIONS HAVE BEEN DETERMINED SEE ASSEMBLY PROCEDURE DW-MMS-388

6 HARNESS TO BE FORMED AND ROUTED AS SHOWN TO SUIT ON ASSY, AND LACED USING ITEM 044.SEAL KNOTS USING ITEMS 050,051,052 IN ACCORDANCE WITH PS2024 MIX 36

7 POSITION TY BASES ITEM 043 T
POSITIONS SHOWN.BOND IN POSI
IN ACCORDANCE WITH PS2024 MI
042

8 BOND THERMISTORS ITEM 061 IN
TO ENGINEERS INSTRUCTIONS US
ACCORDANCE WITH PS2024 MIX

9.BOND ITEM 040 TO EXPOSED EDG
USING ITEMS 050,051,& 052 IN
(CUT GROMMET STRIP IN CENTRE

10 SPLICE USING CRIMPS ITEM 0
SLEEVE AS REQUIRED IN ACCOR

11 WIRE FROM MOTOR TO BE KEPT
SPLICING SPLICES TO BE PO
BASES MARKED b LACE BUNDLE
PER NOTE 6

12 ASSEMBLE HARNESS IN ACCORD
SEE SHT 4 FOR WIRING DIAGR

13 PREPARE SURFACES OF ITEM 1
REQUIREMENTS OF PS 2505 ME

14 CRIMP ITEM 069 TO ITEM 070
LENGTH IN ACCORDANCE WITH
TO GROUNDING WIRE TO PS250

15 ENSURE 2 CENTRAL BRACKETS
LOCATED TO ALIGN IN A COMM
PRIOR TO TORQUE TIGHTENING
VERIFY ALIGNMENT AFTER TOR

SEE ASSOCIATED BILL OF MATERIAL	ORIGINAL SCALE 1:2	
UNLESS OTHERWISE STATED STANDARD MANUFACTURING REQUIREMENTS TO DS700 ARE MANDATORY	UNLESS OTHERWISE STATED UNIT OF MEASUREMENT: MILLIMETRES	
MATERIAL	FORM	PROTECTIVE FINISH
-	-	-
	SPEC -	SPEC -

THIS PART MUST BE WEIGHED AND THE WEIGHT RECORDED IN ACCORDANCE WITH EP55

SERVICE DRAWING NUMBER-SHEET NO. ———

3rd ANGLE PROJECTION

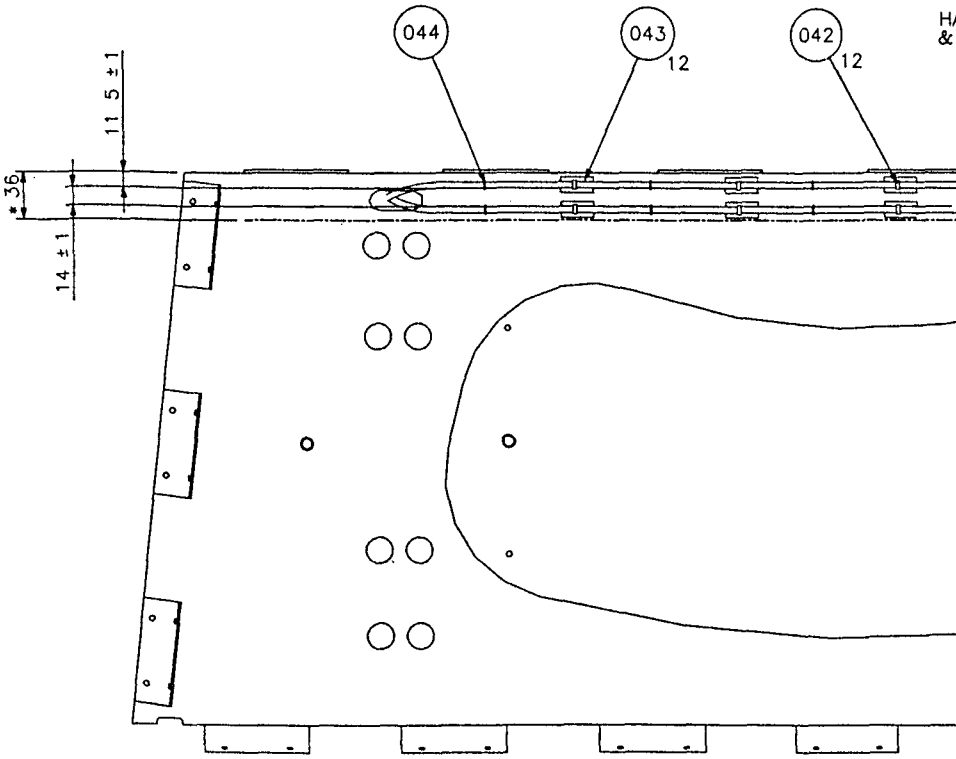

VIEW ON ARROW C
(SEE SHT 1)

SEE ASSOCIATED BILL OF MATERIAL	ORIGINAL SCALE 1:2	
UNLESS OTHERWISE STATED STANDARD MANUFACTURING REQUIREMENTS TO ARE MANDATORY	UNLESS OTHERWISE STATED UNIT OF MEASUREMENT: MILLIMETRES	
MATERIAL	FORM	PROTECTIVE FINISH
–	–	–
	SPEC –	SPEC –

SERVICE DRAWING NUMBER-SHEET NO. ——— | 3rd ANGLE PROJECTION

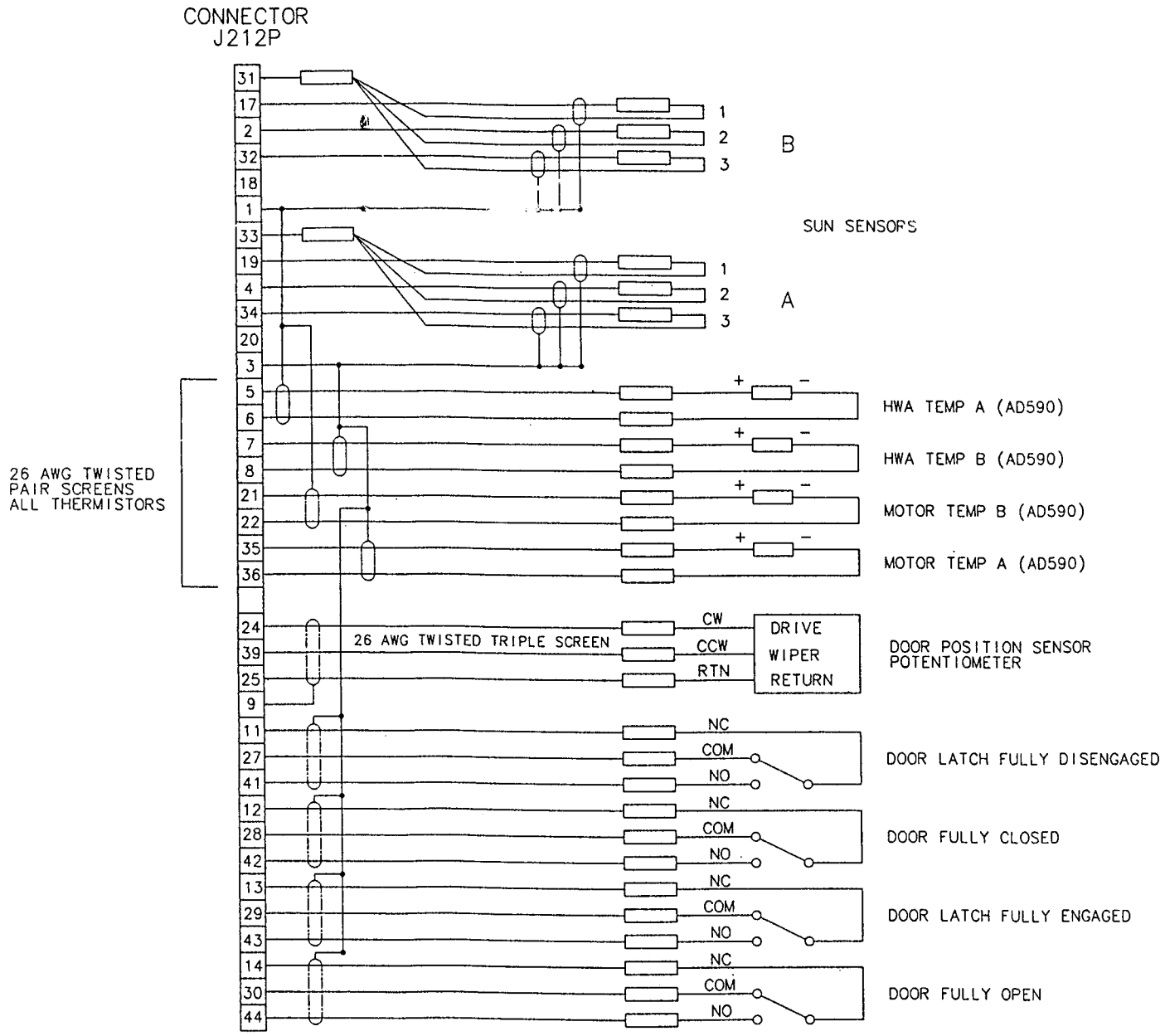

WIRING DIAGRAM FOR SUNSHIELD CONTRO

~~SEE ASSOCIATED BILL OF MATERIAL~~	ORIGINAL SCALE	
UNLESS OTHERWISE STATED STANDARD MANUFACTURING REQUIREMENTS TO ARE MANDATORY	UNLESS OTHERWISE STATED UNIT OF MEASUREMENT: MILLIMETRES	
MATERIAL	FORM	PROTECTIVE FINISH
-	-	-
	SPEC -	SPEC -

SERVICE DRAWING NO	SHEET
DW-MMS-243	NO 1 OF 1

SECURITY CLASSIFICATION
UNCLASSIFIED

3rd ANGLE PROJECTION

USED ON

ISSUES BEFORE CERTIFYING		
HKD	ISS	A N NO
	A	00091
	B	00181

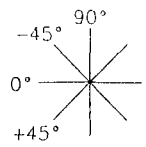

FIBRE ORIENTATION

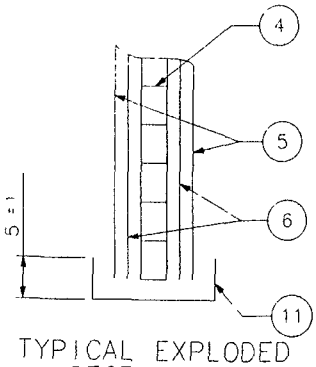

TYPICAL EXPLODED SECTION A-A (SEE NOTES)

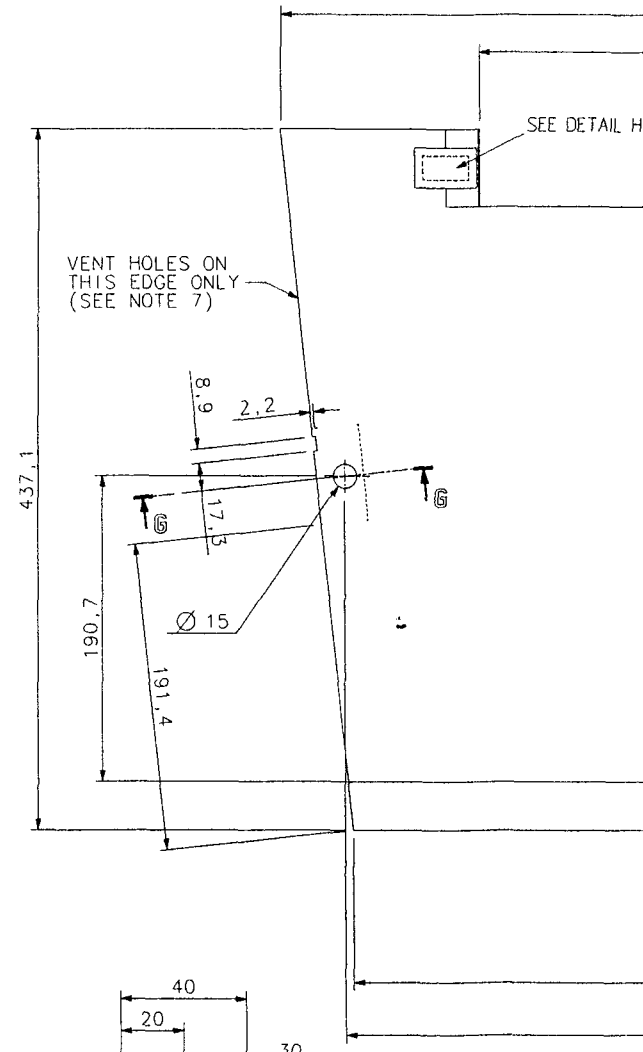

NOTES

1 MANUFACTURE IAW S-3-04-060 AND S-3-04-037

2 PANEL CONSTRUCTED FROM 8,8 ± 0,1 THICK HONEYCOMB CORE ITEM 4 WITH 0° RIBBON DIRECTION, FACED WITH 4 LAYERS OF CFRP, ITEM 5 PER SIDE ORIENTATED 0°/+45°/90 -45° BONDED TO THE CORE WITH FILM ADHESIVE, ITEM 6. ASSEMBLE SUCH THAT THE 0° FIBRE LAYER IS THE EXTERNAL SURFACE SEE SECTION A-A

3 BOND INSERTS ITEM 1 INTO PANEL USING ITEM 8 IAW S-3-04-016, ENSURING TOP OF INSERTS ARE FLUSH WITH OR PROUD OF PANEL BY 0 1mm AS SHOWN IN SECTION B-B NO INSERTS TO BE SUB-FLUSH OF THE PANEL FACE

4 INSERT, ITEM 3, TO BE MACHINED TO THE FINISHED HONEYCOMB CORE THICKNESS, MINUS 0 225 FOR BOND THICKNESS PRIOR TO ASSEMBLY. BOND INSERT ITEM 3 AS SHOWN USING ITEM 12 IAW CDST-HB001-STE

5 FILL HONEYCOMB CELLS AT GROUNDING STUD POSITION USING ITEM 15, IAW S-3-04-016, ENSURING THAT ALL LOCAL CELLS ARE FILLED TO AN APPROX. DIA OF 10-15mm IAW DETAIL F DRILL HOLE IAW DETAIL F POST CURE

6 BOND CLEAT ITEM 28 TO PANEL USING ITEM 9 IAW CDST-HB001-STE CLEAT TO BE POSITIONED FLUSH WITH EDGES OF PANEL ±1mm.
PREPARE SURFACES OF CLEAT AND PANEL AS SHOWN IN DETAIL H, IAW CDST-HB001-STE. BOND 1 LAYER OF ITEM 30 TO THE PREPARED AREA AND COVER USING ITEMS 32 AND 29 ALL DIM'NS SHOWN IN DETAIL H ARE TOLERANCED ±2 0mm

7 KAPTON TAPE ITEM 11, TO BE FITTED TO ALL PANEL EDGES IAW SECTION A-A. ON THE EDGES INDICATED PERFORATE THE TAPE WITH A Ø 2 PIN ENSURING A MINIMUM OF 1 HOLE/20mm PANEL LENGTH TO ALLOW FREE FLOW OF GASES

8 TOLERANCES:- CFRP FACE SKIN ⏥ 0,1/1 OVERALL ⏥ 0,3

9 MARK IN APPROXIMATE POSITIONS SHOWN, TO S-3-07-007 CLASS B TYPE 8, USING ITEM 21, THE DRAWING BOM ISSUE AND WORK ORDER NUMBERS AND THE LETTER E1 IN 5mm HIGH CHARACTERS

10 WITH REFERENCE TO SECTION E-E, ABRADE BOTH SIDES OF PANEL IAW 3164-SS047-TPZ WHERE ITEMS 20 AND 24 ARE TO BE FITTED AND COAT WITH ITEM 16 WHILST STILL WET. ASSEMBLE GROUND STUD ITEM 20, AND WASHER, ITEM 24 AND SECURE WITH NUT ITEM 22. TORQUE THE NUT TO 0 35Nm -10% IAW S-3-04-012 APPLY FILLET LOCK ITEM 10 IAW CDST-HB001-STE & S-3-02-051 TO LOCK NUT ITEM 22, AND GROUNDING WASHER ITEM 24 ONLY ENSURE 180° FILLET AROUND NUT WHILST MAINTAINING A CLEAN THREAD ON GROUNDING STUD ITEM 20 AS SHOWN IN SECTION E-E.
COAT THE EXPOSED AREAS OF ITEM 16 WITH ITEMS 26 AND 27 AS SHOWN LOOSELY ASSEMBLE 2 WASHERS ITEM 23 AND NUT ITEM 22 AS SHOWN IN SECTION E-E

11 TEST BONDING RESISTANCE OF GROUNDING STUD IAW 3164-SS047-TPZ (TP-MMS-335) RECORD RESULTS ON WORK INSTRUCTION SHEET

12 PROTECT AND HANDLE IAW S-3-07-001 AND CDSP-DB010-STE CLASS 3 AND 5

13 PERFORM MASS MEASUREMENT AND RECORD RESULT ON THE WORK INSTRUCTION SHEET

14 CLEANLINESS SHALL BE MAINTAINED IAW 3164-SS070-PLP

15 MACHINE PANEL IN CONJUNCTION WITH DRAWING 3164-SA005-29-0

16 PANEL TO BE MACHINED FROM BOTH FACES TO AVOID DELAMINATION OF FACESKINS

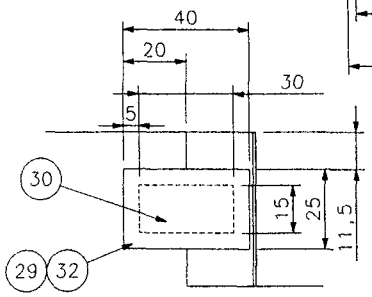

DETAIL H
SEE NOTE 6

CAD MODEL
A PHYPERS 11FEB98
DESIGN APPD A J STEWART 3/4/98
CERTIFIED
CHECKED G1 A J STEWART 3/4/98
DRAWN A PHYPERS 11FEB98

ISS	DATE	A N No	CHKD	ISS	DATE	A N No.
01	14 4 99	0023B				

COPYRIGHT:
MATRA MARCONI SPACE UK LTD

THE COPYRIGHT IN THIS DOCUMENT IS THE PROPERTY OF MATRA MARCONI SPACE UK LIMITED. THIS DOCUMENT IS SUPPLIED BY MATRA MARCONI SPACE ON THE EXPRESS TERMS THAT IT IS TO BE TREATED AS CONFIDENTIAL AND THAT IT MAY NOT BE COPIED, USED OR

SERVICE DRAWING NO	SHEET NO 1 OF 1
DW-MMS-244	

3rd ANGLE PROJECTION

SECURITY CLASSIFICATION
UNCLASSIFIED

USED ON

ISSUES BEFORE CERTIFYING

CHKD	ISS	A N NO
	A	00107
	B	00196

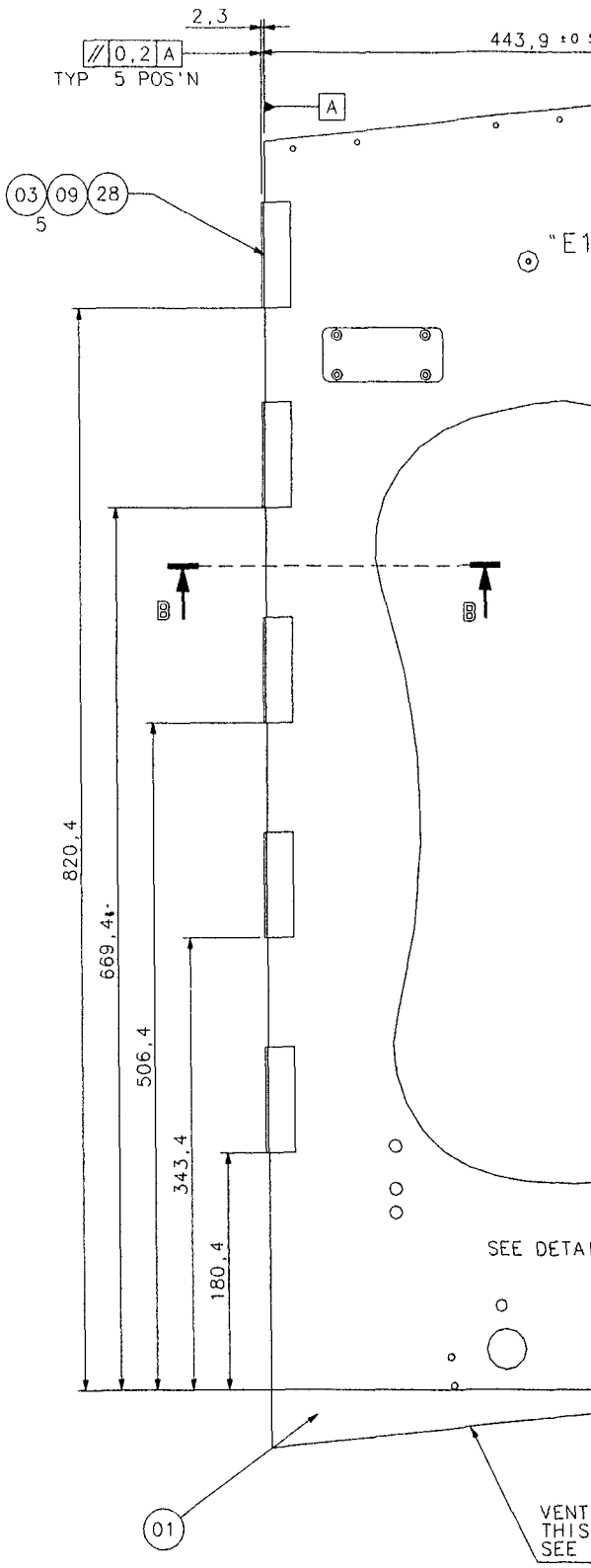

NOTES:

1 BOND CLEATS, ITEMS 2,3 & 5, TO PANEL, ITEM 1, IN POS'NS SHOWN USING ECCOBOND 285/CAT9, ITEM 9, & ST/STL BOND WIRE, ITEM 28, IAW CDST-HB001-STE

2 BOND STUDS, ITEM 6, TO PANEL, ITEM 1, AS SHOWN IN SECTION A-A LOOSELY ASSEMBLE WASHER, ITEM 21, AND NUT, ITEM 22, TO EACH STUD

3 ATTACH CLEATS (ITEM 4) TO ITEM 1 USING ITEMS 19, 21 & 22 TORQUE NUTS (ITEM 22) TO 0,2 ±0,1Nm

4 ATTACH BRACKETS (ITEM 7) TO ITEM 1 USING ITEMS 20 & 21 TORQUE FIXINGS TO 0,3 ±0,1Nm

5 APPLY KAPTON TAPE, ITEM 27, TO ALL EXPOSED HONEYCOMB PANEL EDGES IAW SECTION B-B PERFORATE THE THE TAPE ON EDGES INDICATED WITH Ø 2,0 PIN, ENSURING A MINIMUM OF ONE HOLE/20mm OF PANEL LENGTH

6 MARK IN APPROXIMATE POS'NS SHOWN, BOM NUMBER, ISSUE, WORK ORDER NUMBER & E1, IN 5mm HIGH CHARACTERS IAW S-3-07-007 CLASS B TYPE 8 USING WHITE INK, ITEM 23

7 PROTECT AND HANDLE IAW S-3-07-001 AND CDSP-DB010-STE CLASS 3 AND 5

8 CLEANLINESS SHALL BE MAINTAINED IAW 3164-SS070-PLP

9 PREPARE SURFACES OF PANEL, ITEM 1 & CLEATS, ITEMS 2, 3 & 5 AS SHOWN IN DETAIL H AND IAW CDST-HB001-STE. TEST RESISTANCE OF PREPARED AREAS IAW 3164-SS047-TPZ. BOND 1 LAYER OF CHO-FOIL, ITEM 24, TO THE PREPARED AREA AND COVER USING ISOTAC TAPE AND CARBON FILLED KAPTON, ITEMS 23 & 25 ALL DIM'S IN DETAIL H ARE ±2,0mm

10 MEASURE RESISTANCE OF ALL GROUNDING STRAPS IAW 3164-SS047-TPZ (TP-MMS-33S) & RECORD RESULTS ON WORK INSTRUCTION

11 MEASURE WEIGHT AND RECORD MASS ON WORK INSTRUCTION

CAD MODEL	A PHYPERS 11FEB98
DESIGN APPD	A J STEWART 1/5/98
CERTIFIED	
CHECKED	G1 A J STEWART 1/5/98
DRAWN	A PHYPERS 11FEB98

ISS	DATE	A N No	CHKD	ISS	DATE	A.N
				01	26 4 99	0026

COPYRIGHT: MATRA MARCONI SPACE UK LTD

THE COPYRIGHT IN THIS DOCUMENT IS THE PROPERTY OF MATRA MARCONI SPACE UK LIMITED. THIS DOCUMENT IS SUPPLIED BY MATRA MARCONI SPACE ON THE EXPRESS TERMS THAT IT IS TO BE TREATED AS CONFIDENTIAL AND THAT IT MAY NOT BE COPIED, USED OR DISCLOSED TO OTHERS FOR ANY PURPOSE EXCEPT AS AUTHORISED IN

3rd ANGLE PROJECTION

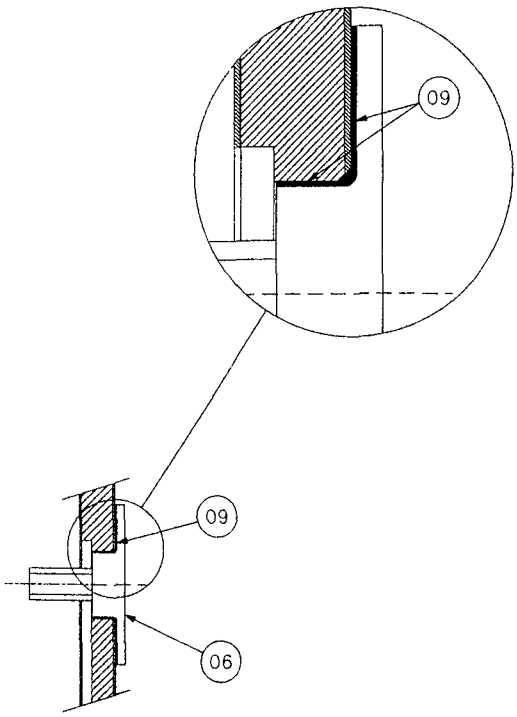

SECTION A–A

VENT HOLES
THIS EDGE.
SEE NOTE 5

01

// 0,2 B

TYP 2 POS'N

41,5

B

MATERIAL 3164-SA006-05-F	PROTECTIVE FINISH	TOLERANCES U O S LINEAR:- 0 2 ANGULAR:-	
SPEC.	SPEC.	SCALE:- 1:2	~~THIS ITEM TO BE WEIGHED IN ACCORDANCE WITH ES665~~
~~UNLESS OTHERWISE STATED STANDARD MANUFACTURING REQUIREMENTS TO DS700 ARE MANDATORY.~~ ALL DIMENSIONS ARE IN MILLIMETRES		~~ES 001~~ ES 001	ESTIMATED MASS (kg) 1,074

COPYRIGHT:
MATRA MARCONI SPACE UK LTD

THE COPYRIGHT IN THIS DOCUMENT IS THE PROPERTY OF MATRA MARCONI SPACE UK LIMITED. THIS DOCUMENT IS SUPPLIED BY MATRA MARCONI SPACE ON THE EXPRESS TERMS THAT IT IS TO BE TREATED AS CONFIDENTIAL AND THAT IT MAY NOT BE COPIED, USED OR DISCLOSED TO OTHERS FOR ANY PURPOSE EXCEPT AS AUTHORISED IN WRITING BY THIS COMPANY

SERVICE DRAWING NO
DW-MMS-245

SHEET NO 1 OF 1

3rd ANGLE PROJECTION

SECURITY CLASSIFICATION
UNCLASSIFIED

USED ON
3164-SA006-04-0

ISSUES BEFORE CERTIFYING

CHKD	ISS	A N NO
	A	00092
	B	00117
	C	00197

IDENT	X AXIS	Y AXIS
A1	979,12	30,88
A2	973,88	80,60
A3	962,38	190,01
A4	957,15	239,73
A5	945,65	349,13
A6	940,41	398,86
B1	769,91	68,25
B2	769,91	133,75
B3	769,91	296,75
B4	769,91	365,75
B5	799,91	365,75
B6	799,91	296,75
B7	799,91	133,75
B8	799,91	68,25
C1	134,68	323,99
C2	152,68	323,99
C3	185,26	323,99
D1	3,18	279,29
D2	25,06	281,60
D3	15,01	166,91
D4	36,89	169,22
D5	30,70	237,13
D6	63,71	240,91
E1	855,00	215,00
F1	195,41	412,17
F2	245,41	412,17
F3	358,41	412,17
F4	408,41	412,17
F5	521,41	412,17
F6	571,41	412,17
F7	684,41	412,17
F8	734,41	412,17
F9	835,41	412,17
F10	885,41	412,17
F11	120,00	8,12
F12	170,00	8,12
F13	270,00	8,12
F14	320,00	8,12
F15	420,00	8,12
F16	470,00	8,12
F17	570,00	8,12
F18	620,00	8,12
F19	720,00	8,12
F20	770,00	8,12
F21	870,00	8,12
F22	920,00	8,12

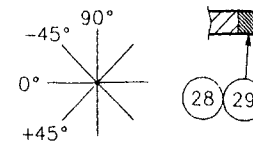

FIBRE ORIENTATION

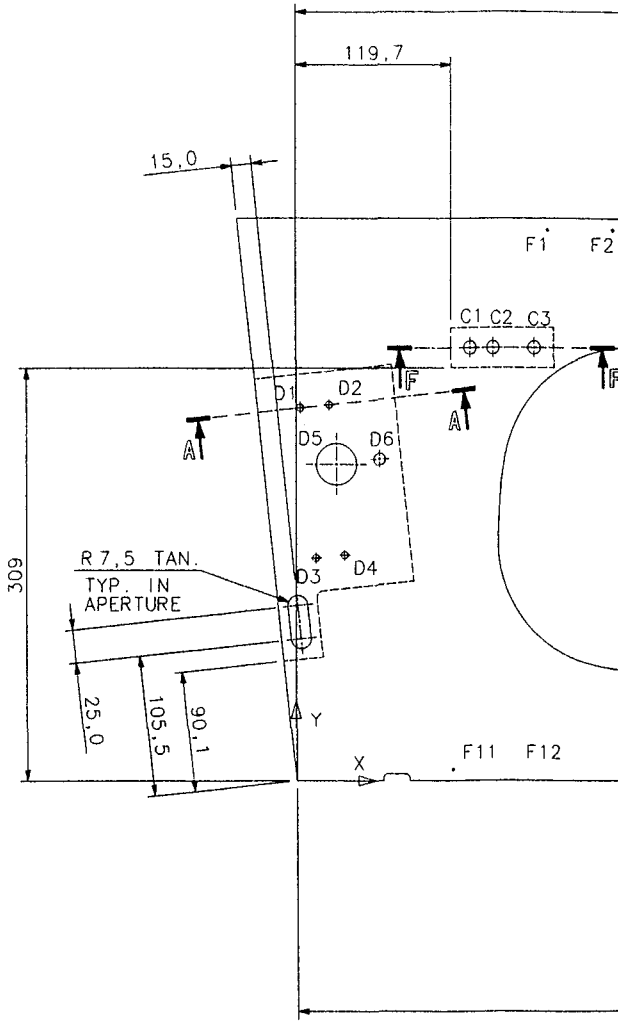

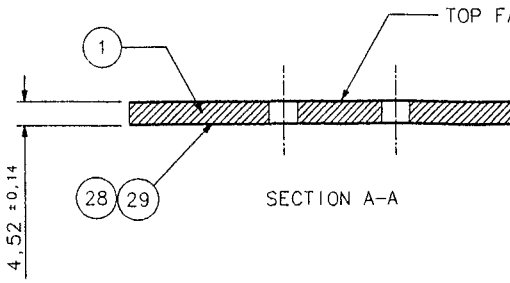

SECTION A-A

IDENT	DESCRIPTION	QTY	POS TOL
A	Ø 4,5/4,6	6	⊕ Ø0,1
B	SEE SECT B-B	8	⊕ Ø0,1
C	SEE SECT F-F	3	⊕ Ø0,2
D1-4	Ø 4,3/4,4	4	⊕ Ø0,1
D5	Ø 31,0	1	⊕ Ø0,1
D6	Ø 9,0	1	⊕ Ø0,1
E	SEE NOTE 4	1	⊕ Ø0,5
*F	Ø 2,05 +0,05	22	⊕ Ø0,05

* DRILL HOLES THRO' INDICATED FACESKIN ONLY

CAD MODEL
A PHYPERS 11FEB98

DESIGN APPD
A J STEWART 3/4/98

CERTIFIED

CHECKED
G1
A J STEWART 3/4/98

DRAWN
A PHYPERS 11FEB98

ISS	DATE	A N No	CHKD	ISS	DATE	A N No.
01	26 4 99	00254				

COPYRIGHT:
MATRA MARCONI SPACE UK LTD

THE COPYRIGHT IN THIS DOCUMENT IS THE PROPERTY OF MATRA MARCONI SPACE UK LIMITED. THIS DOCUMENT IS SUPPLIED BY MATRA MARCONI SPACE ON THE EXPRESS TERMS THAT IT IS TO BE TREATED AS CONFIDENTIAL AND THAT IT MAY NOT BE COPIED, USED OR DISCLOSED TO OTHERS FOR ANY PURPOSE EXCEPT AS AUTHORISED IN

3rd ANGLE PROJECTION

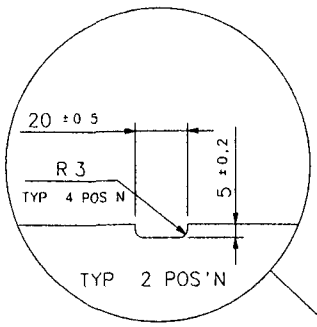

IDENT	X AXIS	Y AXIS
G1	46,75	47,57
G2	41,51	97,29
G3	14,59	352,88
G4	9,35	402,60

IDENT	DESCRIPTION	QTY	POS TOL
G	Ø 2,05 +0,05	4	⊕ Ø0,05

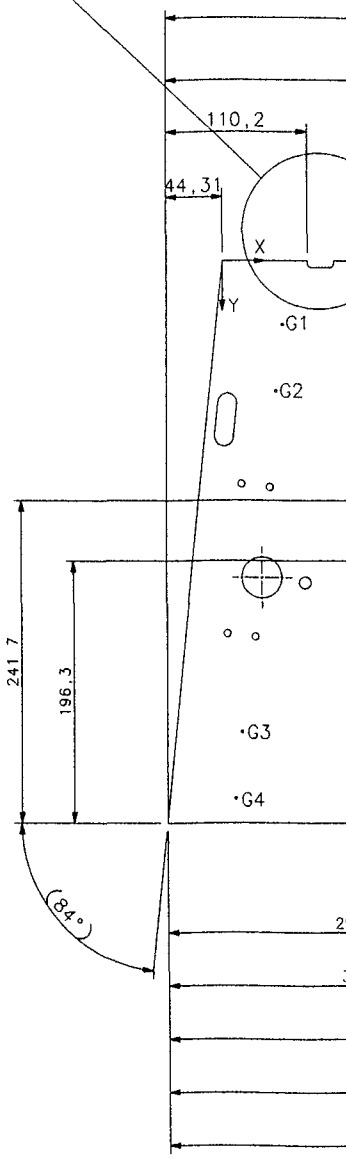

NOTES

1 MANUFACTURE IAW S-3-04-060 AND S-3-04-037

2 PANEL CONSTRUCTED FROM 3,8 ± 0,1 THICK HONEYCOMB CORE,ITEM 4, WITH 0° RIBBON DIRECTION OF CFRP, ITEM 5, PER SIDE, ORIENTATED 0°/ +45°/90°/-45° BONDED TO THE CORE WITH FILM ADHESIVE, ITEM 6. ASSEMBLE SUCH THAT THE 0° FIBRE LAYER IS THE EXTERNAL SURFACE SEE SECTION D-D

3 INSERTS,ITEMS 1,2,3 AND 7,TO BE MACHINED TO THE FINISHED HONEYCOMB CORE THICKNESS (MINUS 0,225 FOR BOND THICKNESS), PRIOR TO ASSEMBLY INSERTS TO BE MACHINED USING THE MOULD TOOL FACE OF LAMINATE AS THE DATUM FACE. BOND INSERTS AS SHOWN USING ITEM 6 IAW CDST-HB001-STE. DRILL HOLES TO DIMENSIONS SHOWN SEE SECTIONS A-A, B-B, C-C, E-E AND F-F

4 FILL LOCALISED HONEYCOMB CELLS TO APPROXIMATE Ø10-15mm AT POS'N E1 USING ITEM 15 IAW S-3-04-016, ENSURING THAT ALL LOCAL CELLS ARE FILLED IAW DETAIL H POST CURE, DRILL HOLE THROUGH PANEL IAW DETAIL H

5 TOLERANCES:- CFRP FACE SKIN ▱ 0,1/100 OVERALL ▱ 0,3
INSERTS ▱ 0,1/100 OVERALL ▱ 0,2

6 IDENT IN ACCORDANCE WITH S-3-07-007 TYPE 13 CLASS C (BAG AND TAG)

7 CLEANLINESS SHALL BE MAINTAINED IN ACCORDANCE WITH 3164-SS070-PLP

8 WITH REFERENCE TO SECTION G-G, ABRADE BOTH SIDES OF PANEL, IAW 3164-SS047-TPZ, WHERE ITEMS 20 AND 24 ARE TO BE FITTED & COAT WITH ITEM 16. WHILST STILL WET", ASSEMBLE GROUND STUD, ITEM 20, AND WASHER, ITEM 24, AND SECURE WITH NUT, ITEM 22. TORQUE THE NUT TO 0,35Nm -10% IAW S-3-04-012. APFILLET LOCK, ITEM 10, IAW CDST-HB001-STE & S-3-02-051 TO LOCK NUT, ITEM 22, & GROUNDING WASHER, ITEM 24, ONLY ENSURE 180° FILLET AROUND LOCK NUT WHILST MAINTAINING A CLEAN THREAD ON GROUNDING STUD, ITEM 20, AS SHOWN IN SECTION G-G.
COAT EXPOSED AREAS OF ITEM 16 WITH ITEMS 26 & 27 AS SHOWN LOOSELY ASSEMBLE 2 WASHERS, ITEM 23, & NUT, ITEM 22, AS SHOWN IN SECTION G-G

9 TEST BONDING RESISTANCE OF GROUNDING STUD IAW 3164-SS047-TPZ (TP-MMS-335) RECORD ON WORK INSTRUCTION

10 PROTECT AND HANDLE IAW S-3-07-001 AND CDSP-DB010-STE CLASS 3 AND 5

11 MEASURE WEIGHT AND RECORD ON WORK INSTRUCTION

12 MACHINE PANEL IN CONJUNCTION WITH DRG 3164-SA007-29-0

13 PANEL TO BE MACHINED FROM BOTH FACES TO AVOID DELAMINATION OF FACESKINS

MATERIAL 3164-SA007-05-F	PROTECTIVE FINISH	TOLERANCES U O.S LINEAR:- ± 0,2 - 1 DP ± 0,1 - 2 DP ANGULAR:-	
SPEC.	SPEC.	SCALE:- 1:2	~~THIS ITEM TO BE WEIGHED IN ACCORDANCE WITH ES665~~
~~UNLESS OTHERWISE STATED STANDARD MANUFACTURING REQUIREMENTS TO DS700 ARE MANDATORY.~~ ALL DIMENSIONS ARE IN MILLIMETRES		ES 601 00	ESTIMATED MASS (kg) 0,75

COPYRIGHT:
MATRA MARCONI SPACE UK LTD
THE COPYRIGHT IN THIS DOCUMENT IS THE PROPERTY OF MATRA MARCONI SPACE UK LIMITED. THIS DOCUMENT IS SUPPLIED BY MATRA MARCONI SPACE ON THE EXPRESS TERMS THAT IT IS TO BE TREATED AS CONFIDENTIAL AND THAT IT MAY NOT BE COPIED, USED OR DISCLOSED TO OTHERS FOR ANY PURPOSE EXCEPT AS AUTHORISED IN

SERVICE DRAWING NUMBER/SHEET NO

3rd ANGLE PROJECTION

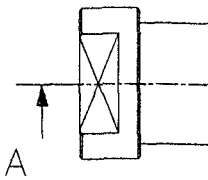

NOTES -

1 CLEANLINESS STANDARD PS2058 GRADE 2X

2 DO NOT TORQUE TIGHTEN ITEMS 009 & 006
FINGER TIGHTEN ONLY
TORQUE TIGHTEN ITEMS 015 & 016 TO THE
REQUIREMENTS OF PS2039 APPENDIX A USING
THE VALUES LISTED BELOW

ITEM NO	RUNNNG TORQUE (Nm)	PRE TENSION TORQUE (Nm)	MAXIMUM TORQUE (N
015	-	0 45 - 0 55	0 55
016	-	0.31 - 0 37	0 37

3 LOCK ITEMS 015 & 016 USING ITEMS 030,031,& 032
IN ACCORDANCE WITH PS2024 MIX 36

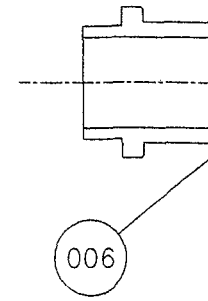

~~SEE ASSOCIATED BILL OF MATERIAL~~

ORIGINAL SCALE 2:1

UNLESS OTHERWISE STATED STANDARD MANUFACTURING REQUIREMENTS TO DS700 ARE MANDATORY

UNLESS OTHERWISE STATED UNIT OF MEASUREMENT: MILLIMETRES

MATERIAL	FORM	PROTECTIVE FINISH
	SPEC	SPEC

THIS PART MUST BE WEIGHED AND THE WEIGHT RECORDED IN ACCORDANCE WITH EP55

SPACECR

STANDAR

HANDLE AND

SERVICE DRAWING NUMBER/SHEET NO

3rd ANGLE PROJECTION

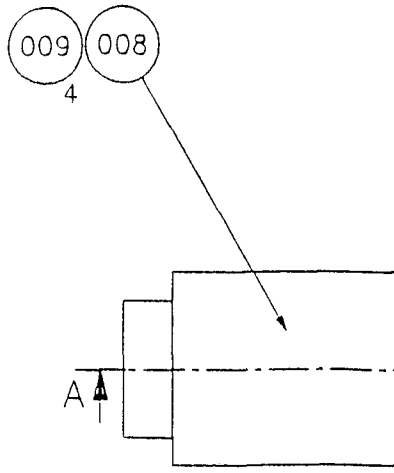

NOTES –

1 CLEANLINESS STANDARD PS2058 GRADE 2X

2 DO NOT TORQUE TIGHTEN ITEMS 002 & 004
FINGER TIGHTEN ONLY
TORQUE TIGHTEN 009,016 & 021 TO THE REQUIREMENTS
OF PS2039 APPENDIX A USING THE VALUES LISTED BELOW

ITEM NO	RUNNING TORQUE (Nm)	PRE TENSION TORQUE (Nm)	MAXIMUM TORQUE
009	–	0 31 – 0 37	0 37
016	–	0 31 – 0 37	0 37
021	–	0 21 – 0 25	0 25

3 DRILL & REAM 1 HOLE THROUGH ITEM 007 & 008
∅2 997/2 987 TO SUIT ITEM 012

4 LOCK ITEMS 009,016 & 021 USING ITEMS 025,026 & 027
IN ACCORDANCE WITH PS2024 MIX 36

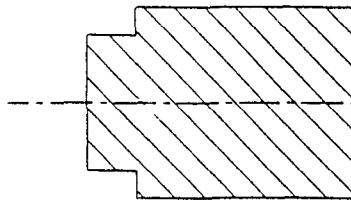

~~SEE ASSOCIATED BILL OF MATERIAL~~

ORIGINAL SCALE 2 1

UNLESS OTHERWISE STATED STANDARD MANUFACTURING REQUIREMENTS TO DS700 ARE MANDATORY

UNLESS OTHERWISE STATED UNIT OF MEASUREMENT: MILLIMETRES

MATERIAL	FORM	PROTECTIVE FINISH
	SPEC	SPEC

THIS PART MUST BE WEIGHED AND THE WEIGHT RECORDED IN ACCORDANCE WITH EP55

SPACEC

STAND

HANDLE A

SERVICE DRAWING NUMBER/SHEET NO

3rd ANGLE PROJECTION

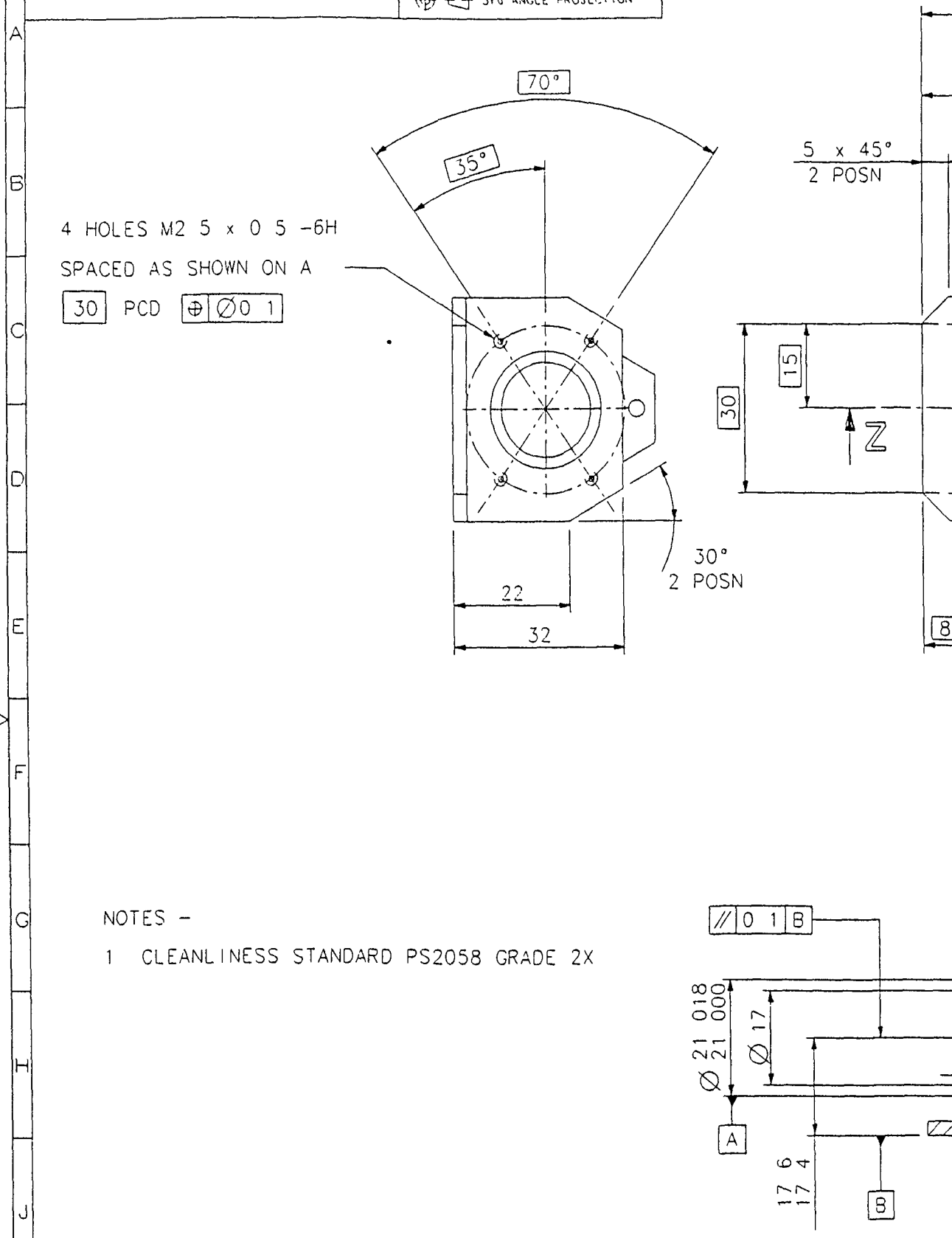

NOTES -

1 CLEANLINESS STANDARD PS2058 GRADE 2X

~~SEE ASSOCIATED BILL OF MATERIAL~~	ORIGINAL SCALE 2 :	
UNLESS OTHERWISE STATED STANDARD MANUFACTURING REQUIREMENTS TO DS700 ARE MANDATORY	UNLESS OTHERWISE STATED UNIT OF MEASUREMENT: MILLIMETRES	
MATERIAL: AL ALLOY	FORM: BAR SPEC L111(6082-T651)	PROTECTIVE FINISH: ALOCROM 1200 SPEC PS2068

THIS PART MUST BE WEIGHED AND THE WEIGHT RECORDED IN ACCORDANCE WITH EP55

SPACE

STA

HANDLE

SERVICE DRAWING NUMBER/SHEET NO ——— | 3rd ANGLE PROJECTION

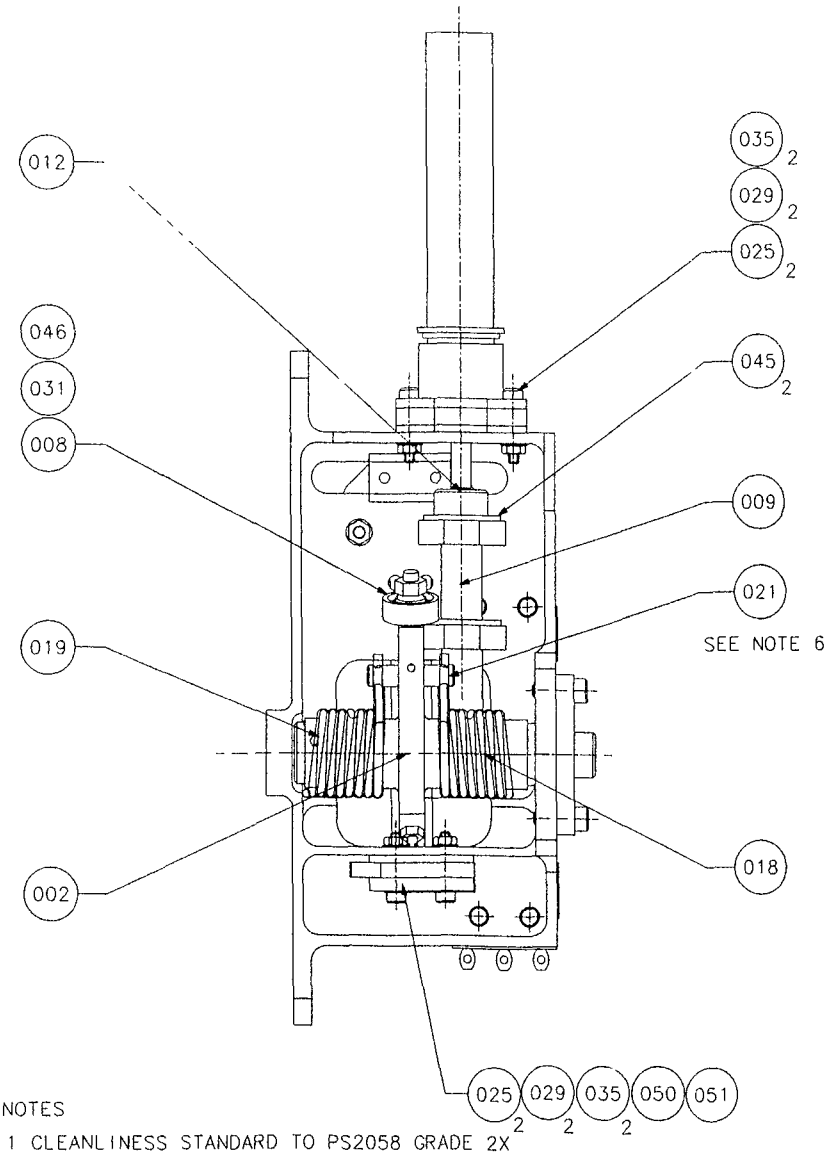

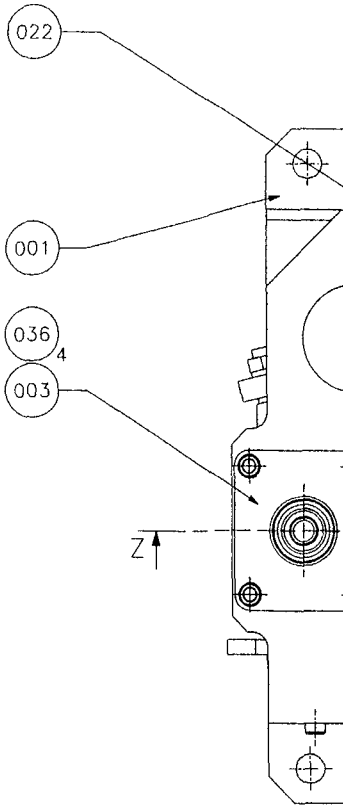

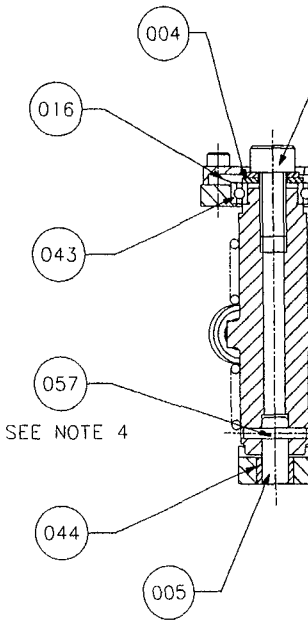

NOTES

1 CLEANLINESS STANDARD TO PS2058 GRADE 2X

2 TORQUE TIGHTEN TO THE REQUIREMENTS OF PS2039 APPENDIX A USING THE VALUES LISTED BELOW

ITEM NO	RUNNING TORQUE (Nm)	PRE TENSION TORQUE (Nm)	MAXIMUM TORQUE (Nm)
027*	-	0.21-0.25	0 25
029*	-	0.21-0.25	0 25
030	-	0.31-0.37	0.37
031	-	0.45-0.55	0.55
035*	-	0.21-0.25	0.25
036	-	0.31-0.37	0.37
038	-	0.45-0.55	0.55

* HAND TIGHTEN SCREWS & NUTS AT THIS STAGE. FINAL TIGHTENING & LOCKING WILL BE CARRIED OUT AT THE NEXT ASSEMBLY LEVEL

3 LOCK ABOVE ITEMS USING ITEMS 062,063,& 064 IN ACCORDANCE WITH PS2024 MIX 36

4 DRILL AND REAM THROUGH ITEMS 002 & 005 Ø1 997/1 987 TO SUIT ITEM 057

5 THERMAL PACKER TO BE SUPPLIED WITH THERMALLY CONTROLLED ACTUATOR ITEM 020

6 PRESS FIT AND BOND ITEM 021 USING ITEMS 062 063 AND 064

7 FOR THERMAL REQUIREMENTS SEE SHT 2 AREAS MARKED ///// ARE TO BE COVERED WITH ITEM 040

8 BOND ITEMS 013 & 014 USING ITEMS 062,063 & 064 IN ACCCRDANCE WITH PS2024 MIX 36, PRIOR TO FINAL ASSY

9 SPOT THROUGH FROM ITEM 013 TO 014 Ø3 3/3 2,AND RIVET PRIOR TO FINAL ASSY

SEC

~~SEE ASSOCIATED BILL OF MATERIAL~~	ORIGINAL SCALE 2:1	
UNLESS OTHERWISE STATED STANDARD MANUFACTURING REQUIREMENTS TO DS700 ARE MANDATORY	UNLESS OTHERWISE STATED UNIT OF MEASUREMENT: MILLIMETRES	
MATERIAL ———	FORM ——— SPEC ———	PROTECTIVE FINISH ——— SPEC ———

THIS PART MUST BE WEIGHED AND THE WEIGHT RECORDED IN ACCORDANCE WITH EP55

SERVICE DRAWING NUMBER/SHEET NO ——

3rd ANGLE PROJECTION

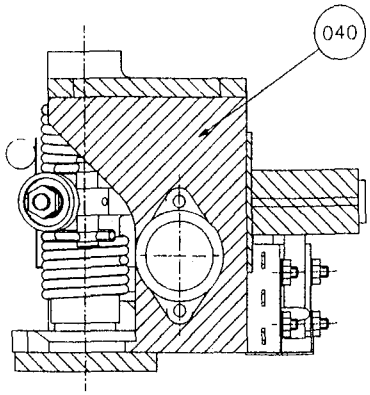

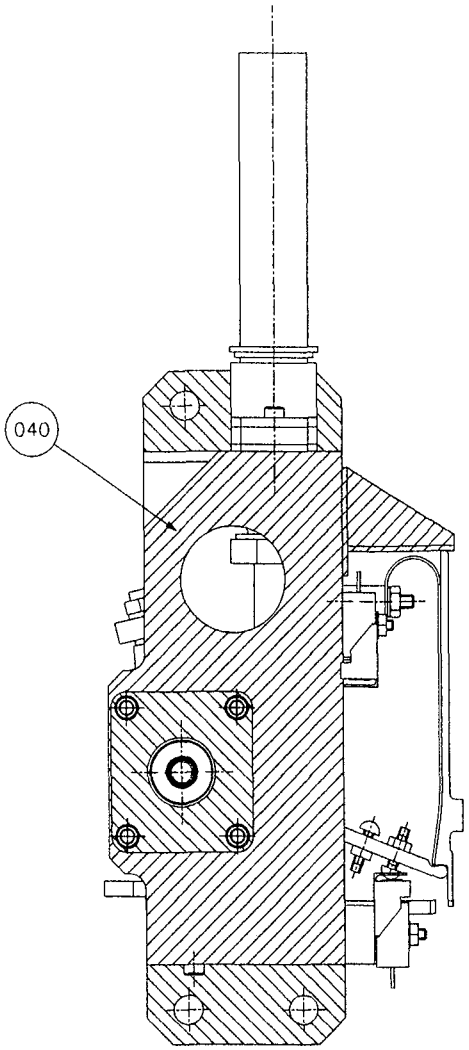

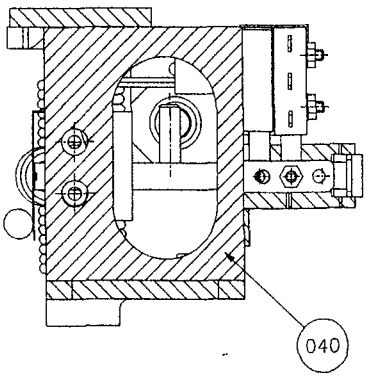

~~SEE ASSOCIATED BILL OF MATERIAL~~	ORIGINAL SCALE 1:1	
UNLESS OTHERWISE STATED STANDARD MANUFACTURING REQUIREMENTS TO DS700 ARE MANDATORY	UNLESS OTHERWISE STATED UNIT OF MEASUREMENT: MILLIMETRES	
MATERIAL ——	FORM —— SPEC ——	PROTECTIVE FINISH —— SPEC ——

THIS PART MUST BE WEIGHED AND THE WEIGHT RECORDED IN ACCORDANCE WITH EP55

3rd ANGLE PROJECTION

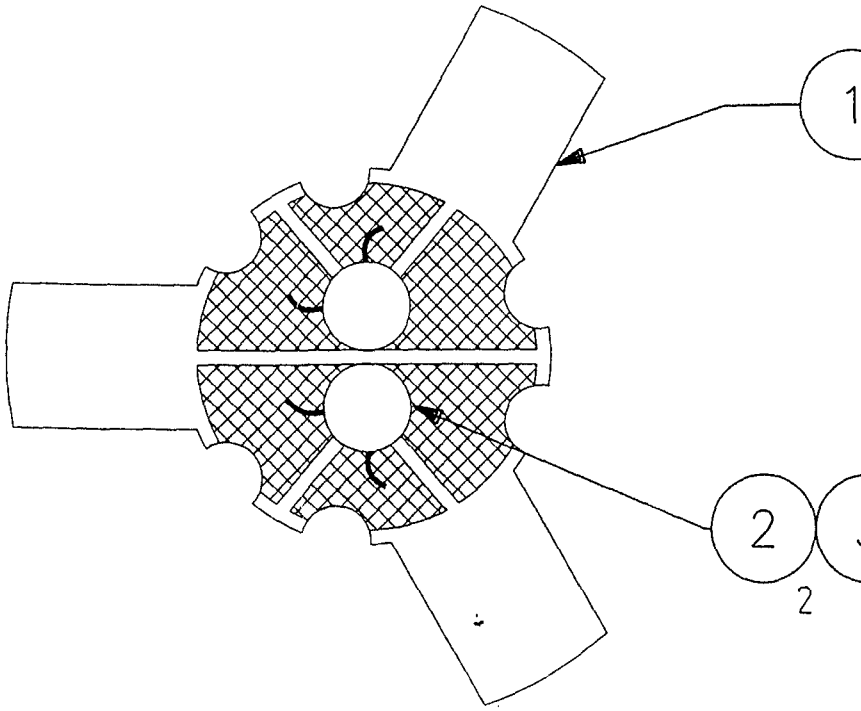

MATERIAL SEE BOM	PROTECTIVE FINISH NONE	TOLERANCES U O S LINEAR - N/A ANGULAR -
SPEC	SPEC	SCALE - 5.1

UNLESS OTHERWISE STATED STANDARD MANUFACTURING REQUIREMENTS TO DS700 ARE MANDATORY ALL DIMENSIONS ARE IN MILLIMETRES

00
ES 601

COPYRIGHT:
MATRA MARCONI SPACE UK LTD

THE COPYRIGHT IN THIS DOCUMENT IS THE PROPERTY OF MATRA MARCONI SPACE UK LIMITED. THIS DOCUMENT IS SUPPLIED BY MATRA MARCONI SPACE ON THE EXPRESS TERMS THAT IT IS TO BE TREATED AS CONFIDENTIAL AND THAT IT MAY NOT BE COPIED, USED OR DISCLOSED TO OTHERS FOR ANY PURPOSE EXCEPT AS AUTHORISED IN WRITING BY THIS COMPANY

1	2	3	4	5	6	7	8	9	10	11	12	13

3rd ANGLE PROJECTION

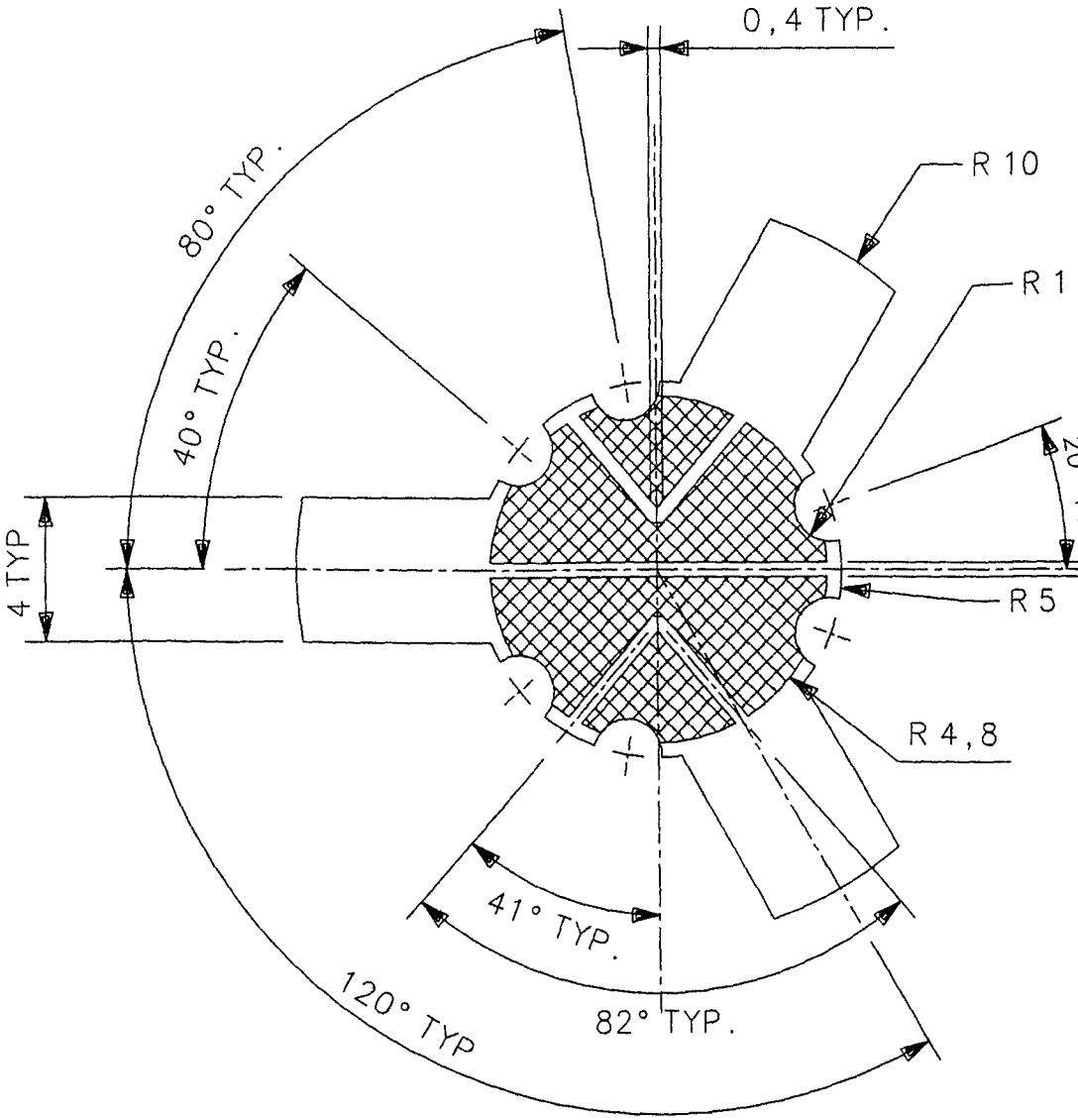

MATERIAL SEE BOM	PROTECTIVE FINISH NONE	TOLERANCES U O.S LINEAR - N/A ANGULAR .-
SPEC	SPEC.	SCALE:- 5·1

UNLESS OTHERWISE STATED STANDARD MANUFACTURING REQUIREMENTS TO DS700 ARE MANDATORY ALL DIMENSIONS ARE IN MILLIMETRES

ES 601

COPYRIGHT:
MATRA MARCONI SPACE UK LTD

THE COPYRIGHT IN THIS DOCUMENT IS THE PROPERTY OF MATRA MARCONI SPACE UK LIMITED. THIS DOCUMENT IS SUPPLIED BY MATRA MARCONI SPACE ON THE EXPRESS TERMS THAT IT IS TO BE TREATED AS CONFIDENTIAL AND THAT IT MAY NOT BE COPIED, USED OR DISCLOSED TO OTHERS FOR ANY PURPOSE EXCEPT AS AUTHORISED IN WRITING BY THIS COMPANY

1	2	3	4	5	6	7	8	9	10	11

3rd ANGLE PROJECTION

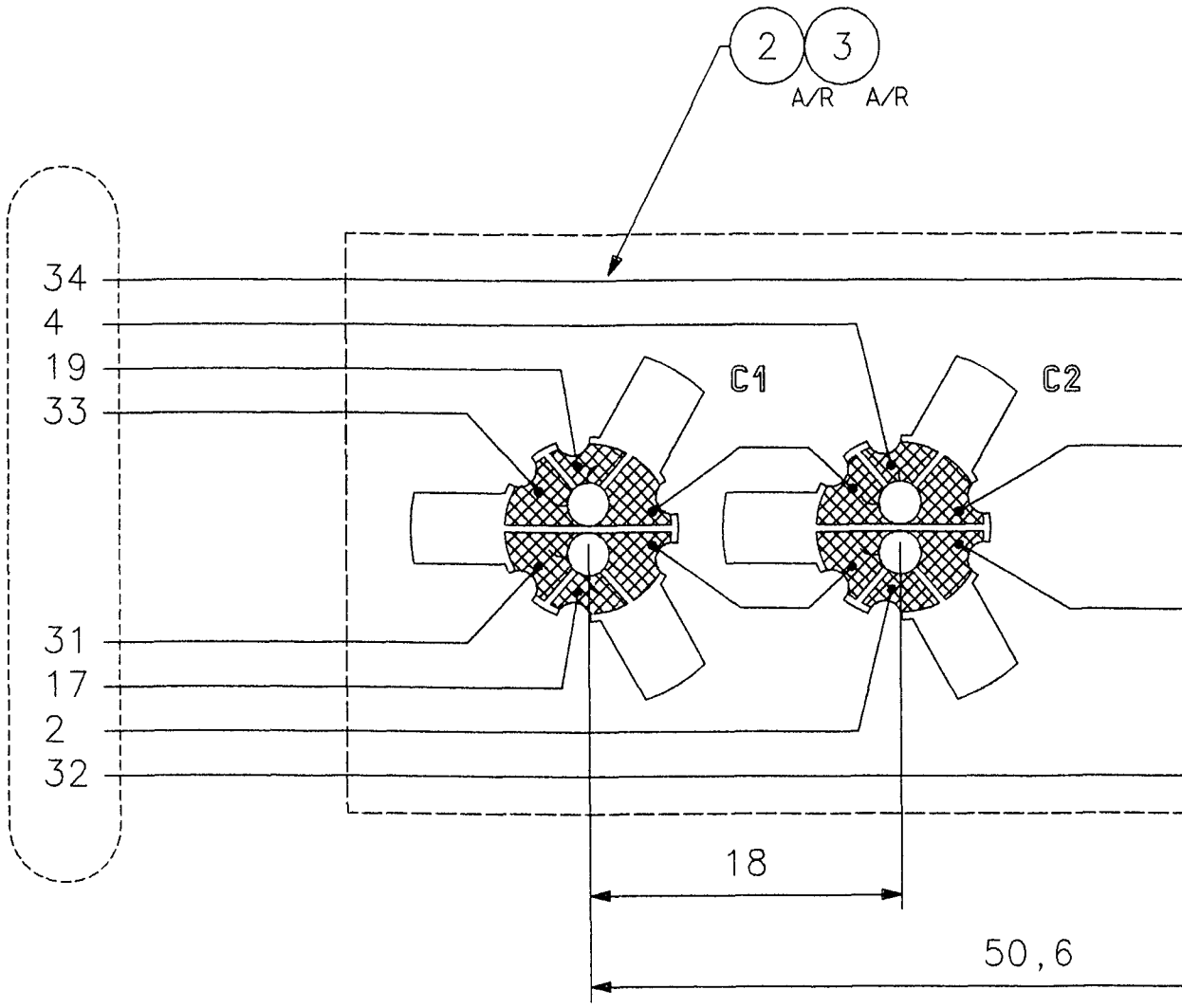

MATERIAL SEE BOM	PROTECTIVE FINISH NONE	TOLERANCES U O S LINEAR - ±1 ANGULAR.-	
SPEC	SPEC.	SCALE - 5:1	THIS ITEM TO BE WEI IN ACCORDANCE WITH
UNLESS OTHERWISE STATED STANDARD MANUFACTURING REQUIREMENTS TO DS700 ARE MANDATORY ALL DIMENSIONS ARE IN MILLIMETRES.		00 ES 601	ESTIMATED MASS (kg)

COPYRIGHT:
MATRA MARCONI SPACE UK LTD

THE COPYRIGHT IN THIS DOCUMENT IS THE PROPERTY OF MATRA MARCONI SPACE UK LIMITED THIS DOCUMENT IS SUPPLIED BY MATRA MARCONI SPACE UK ON THE EXPRESS TERMS THAT IT IS TO BE TREATED AS CONFIDENTIAL AND THAT IT MAY NOT BE COPIED, USED OR DISCLOSED TO OTHERS FOR ANY PURPOSE EXCEPT AS AUTHORISED IN WRITING BY THIS COMPANY

SECTION 2

Declared Materials List PL-MMS-211

HIRDLS

PL-MMS-211
(3164-18002-LIM)
Issue 2

HIGH RESOLUTION DYNAMICS LIMB SOUNDER

Originator: R McKay Date: 22 September, 1999

Subject/Title: **DECLARED MATERIALS LIST**

Description/Summary/Contents:

A list of all materials incorporated into the HIRDLS equipment.

Keywords. STH, SSH, FM, Materials

Purpose of this Document:

Reviewed/Approved by:			
Date (yy-mm-dd):	99-07-27		

Matra Marconi Space
Anchorage Road
Portsmouth
Hampshire PO3 5PU
England

EOS

ORIGINAL WHEN RED

HIRDLS
DECLARED MATERIALS LIST
PL-MMS-211

Responsible Engineer	R. McL	Date.	27/09/99
Quality Assurance		Date	28-9-99
Project Manager		Date	27/SEPT/99

© MATRA MARCONI SPACE UK LIMITED

THE COPYRIGHT IN THIS DOCUMENT IS THE PROPERTY OF MATRA MARCONI SPACE UK LIMITED This document is supplied by Matra Marconi Space UK Limited on the express terms that it is to be treated as confidential and that it may not be copied, used or disclosed to others for any purpose except as expressly authorised under the terms of Contract No N2A 3R 0386

Any person, other than the authorised holder, who finds or otherwise obtains possession of the document, should post it, together with his/her name and address, to the Registry, Matra Marconi Space UK Limited, Anchorage Road, Portsmouth, England, PO3 5PU Postage will be refunded

CONTENTS

1.0 INTRODUCTION

2.0 TABULATION EXPLANATION

3 0 MATERIALS LISTS

1.0 SCOPE

This document contains a list of materials used by MMS on HIRDLS.

2.0 TABULATION EXPLANATION

A ten column table defines the information. The columns are follows:

Column 1 **ITEM NUMBER:**
An arbitrary number specific to each material. The materials appear in 20 groups described below.

GROUP NUMBER	MATERIAL TYPE
1	ALUMINIUM ALLOYS
2	COPPER ALLOYS
3	NICKEL ALLOYS
4	TITANIUM ALLOYS
5	STEELS
6	STAINLESS STEELS
7	FILLER METALS
8	MISCELLANEOUS METALS
9	OPTICAL MATERIALS
10	ADHESIVES, COATINGS, VARNISHES
11	ADHESIVE TAPES
12	PAINTS/INKS
13	LUBRICANTS
14	POTTING COMPOUNDS, SEALANTS, FOAMS
15	REINFORCED PLASTICS
16	RUBBERS/ELASTOMERS
17	THERMOPLASTICS
18	THERMOSET PLASTICS
19	WIRES/CABLES
20	MISC' NON-METALS

Column 2: **COMMERCIAL IDENTIFICATION:**
The unique description of the material e.g., manufacturers trade name or other distinct material definition.

Column 3. **CHEMICAL NATURE** etc.:
The chemical nature, composition, form or heat treatment condition of the material

Column 4· **PROCUREMENT INFORMATION:**
The name of the manufacturer and/or vendor together with the procurement specification, which is either an international requirement standard or a company specific control document.

Column 5: **PROCESS PARAMETERS:**
The details required to define the process parameters e.g adhesive mix and cure details, plating thickness', special cleaning procedures.

Column 6 **USAGE AND LOCATION:**
The specific application of the material and the equipment it is used on.

Column 7: **ENVIRONMENT CODES:**

A code describing:
R = Radiation
A = Ambience (Pressurisation)
T = Temperature

RADIATION/UV/ATOX (R)		AMBIENCE (A)	TEMPERATURE (T)
G = Geostationary L = Low orbit B = Radiation belts I = Interplanetary	S = Outside in shadow L = Outside in light	V = Vacuum H = Hermetic M = Manned E = Elevated pressure	T1 = 0 to 100 K T2 = 100 to 200 K T3 = 200 to 300 K T4 = 300 to 400 K

Notes
1) For materials inside the spacecraft a letter is used from the left-hand column For materials on the surface of the spacecraft, this is combined with the letter "L" or "S".
2) The thermal environment can be indicated by two values e.g. T2/4

Column 8· **SIZE CODE** :
An assessment of the amount of material used based on the following tabulation .

MASS (g)
W0 = 0 < 1
W1 = 1 < 10
W2 = 10 < 100
W3 = 100 < 1000

Column 9 1: **OUTGASSING, OFFGASSING & FLAMMABILITY**

P: Material passed testing.

F: Material failed testing.

U. Unknown properties.

NA: Not applicable to this material group.

STRESS CORROSION CRACKING RATING:

A: High resistance.

B. Medium or Low resistance.

U· Unknown resistance

CORROSION RATING:

A: Does not require supplementary coating

B· Requires supplementary coating.

U: Unknown properties.

NA: Not applicable to this material group.

Column 9.2 **JUSTIFICATION FOR APPROVAL:**

Either qualification plans or previous space programmes

Column 9.3 **STATUS:**
To identify the qualification status of the material a letter code is selected from the following table·

STATUS	
A	Approved
W	Waiver required
Q	Under qualification
O	Open, subject to investigation
D	Deleted

Column 10 **CUSTOMER APPROVAL:**
This column is to be completed by the customer

Declared Materials List

			GROUP 1 ALUMINIUM AND ALLOYS														
1	2	3	4	5	6	7			8	9							10
										9.1					9.2	9.3	
Item No.	Commercial Identification	Chemical Nature and Product Type	Procurement, Manufacturer / Supplier, Specification and Issue.	Summary of Processing Parameters	Use and Location	Environmental Codes R	A	T	Size Code	Corr	SCC	Flam	OFFG	OUTG	Justification for Approval	Contractors App.	Cust. App.
01	5052 Al	Chromated Al alloy honeycomb	02-LC0027	S-3-04-037	Sandwich panel	L	V	3-4	W2	B	A	NA	NA	NA	Qual report 3116-YF002-RPT	A	
02	Wrought aluminium alloy bars, extrusions and forgings	Al, Si (1%), Mg, Mn alloy 6082 to BS L 111 T651	02-LC0003 Various Suppliers	Machined and Alocromed S-4-01-007 PS 2068 PS2058 Anodise to PS 2107	Small formed parts.	L	V	3-4	W2	A	A	NA	NA	NA	Olympus, Hotbird, Hispasat, ERS-2 IEU	A	
03	Aluminium alloy sheet strip and plate 6082	Mg 0.5%, Si 0.7%, Mn 0.4% plate to BS 1115 sheet and strip to BS 1113	01-LC0001 Various Suppliers	Machined and Alocromed S-4-01-007 PS 2068 PS 2058 Anodise to PS 2110	Small structural items	L	V	3-4	W2	B	A	NA	NA	NA	Hotbird, Skynet, ERS-1, ERS-2 IEU, Hispasat	A	
04	7075 Al alloy forging	T7351	02-LC0003	Alocrom S-4-01-007	Base-plate insert	L	V	3-4	W2	B	B	NA	NA	NA	3158-26001-RPZ	A	
05	1200 Al alloy	H14 strip	01-LC0006	S-04-02-020	Grounding	L	V	3-4	W1	A	A	NA	NA	NA	Inmarsat 3 hotbird	A	
06	Fotofoil label	Anodised Al alloy 1100	01-LC0024	S-4-07-021 S-4-02-053	Ident labels	L	V	3-4	W1	NA	NA	NA	NA	NA	Inmarsat 3 Koreasat	A	
07																D	
08																D	
09	Tyrap base TC 105	Aluminium alloy to QQ-A-250 3003 Al 99% Mn 1% H14	25-LC0033 Thomas and Betts	Alocrom S-4-01-007 Bonded with Scotchweld S-4-02-053	Harness location	L	V	3-4	W1	A	A	NA	NA	NA	Inmarsat III, Skynet, ASAR, Hotbird	A	
10	Al alloy insert	7075, T7351, anodised	Shurlock	Pot with item 14-01	Panel assy	L	V	3-4	W2	A	A	NA	NA	NA	Hotbird Koreasat	A	

Declared Materials List

GROUP 1 ALUMINIUM AND ALLOYS

1	2	3	4	5	6	7			8	9							10
										9.1					9.2	9.3	
Item No.	Commercial Identification	Chemical Nature and Product Type	Procurement, Manufacturer / Supplier, Specification and Issue.	Summary of Processing Parameters	Use and Location	Environmental Codes R	A	T	Size Code	Corr	SCC	Flam	OFFG	OUTG	Justification for Approval	Contractors App.	Cust. App.
11	Aluminium snaphead rivet	Al 2.5% Cu 0.3%Mg	25-LC0047, BS SP 77	Anodised, as supplied	Integration	L	V	3-4	W1	A	B	NA	NA	NA	AATSR MHS	A	
12	Aluminium alloy,wrought, L168	4 Cu Al	BS L 168 (2014 A, T6)	Alocrom PS 2068 or Black anodised PS 2107	Small machined parts	L	V	3-4	W2	A	C	NA	NA	NA	GOMOS	A	

Declared Materials List

GROUP 2 COPPER AND ALLOYS

1	2	3	4	5	6	7			8	9							10
										9.1					9.2	9.3	
Item No.	Commercial Identification	Chemical Nature and Product Type	Procurement, Manufacturer / Supplier, Specification and Issue.	Summary of Processing Parameters	Use and Location	Environmental Codes R	A	T	Size Code	Corr	SCC	Flam	OFFG	OUTG	Justification for Approval	Contractors App.	Cust. App.
01	Aluminium bronze	Cu, Al 10%, Ni 5%, Fe 5%	DTD 197 (BS EN CW 307g)	Machined	Bearing	L	V	3-4	W1	A	B	NA	NA	NA	GOMOS	A	
02	Beryllium copper alloy	2% Be, CB 101, half hard	01-LC0012 Goodfellows Telcon	No finish	Spring contact	L	V	3-4	W1	A	A	NA	NA	NA	Silex	A	

Declared Materials List

GROUP 1 NICKEL AND ALLOYS

1	2	3	4	5	6	7			8	9							10
										9.1					9.2	9.3	
Item No.	Commercial Identification	Chemical Nature and Product Type	Procurement, Manufacturer / Supplier, Specification and Issue.	Summary of Processing Parameters	Use and Location	Environmental Codes R	A	T	Size Code	Corr	SCC	Flam	OFFG	OUTG	Justification for Approval	Contractors App.	Cust. App.
01	Ring terminal, Solistrand, Stratotherm	Pure nickel	25-LC0042	Crimping of ring terminal to MLI grounding wire	MLI grounding	L	V	3-4	W1	A	A	NA	NA	NA	SOHO Silex	A	

Declared Materials List

GROUP 4 TITANIUM AND TITANIUM ALLOYS

1	2	3	4	5	6	7			8	9							10
										9.1					9.2	9.3	
Item No.	Commercial Identification	Chemical Nature and Product Type	Procurement, Manufacturer / Supplier, Specification and Issue.	Summary of Processing Parameters	Use and Location	Environmental Codes R	A	T	Size Code	Corr	SCC	Flam	OFFG	OUTG	Justification for Approval	Contractors App.	Cust. App.
01	Titanium alloy	Ti6AL4V bar	BS TA11 BS TA28 BS TA56	DTD942, anodising PS 2051, application of Molykote 106	Structural parts, inserts, fasteners	L	V	3-4	W3	A	A	NA	NA	NA	Skynet ASAR	A	
02	Titanium alloy metric screws with torx socket head sizes M3 and greater	Ti, 6% Al, 4% V, BS 2TA 28 heads to BS A101 anodised to DTD 942	25-LC0068 Various Suppliers	Torquing S-3-04-012 Fillet locking S-3-02-051	Mechanical fastening. Payload integration	L	V	3-4	W1	A	A	NA	NA	NA	Skynet, Telecom 2, Hispasat, Inmarsat III, Silex, Hotbird, ASAR	A	

Declared Materials List

			GROUP 6 STAINLESS STEELS														
1	2	3	4	5	6	7			8	9							10
										9.1					9.2	9.3	
Item No.	Commercial Identification	Chemical Nature and Product Type	Procurement, Manufacturer / Supplier, Specification and Issue.	Summary of Processing Parameters	Use and Location	Environmental Codes R	A	T	Size Code	Corr	SCC	Flam	OFFG	OUTG	Justification for Approval	Contractors App.	Cust. App.
01																D	
02	Helicoil insert		25-LC0012 Armstrong Fastening Ltd WTI Fasteners	Installation S-3-04-052	Wire thread insert	L	V	3-4	W2	A	A	NA	NA	NA	Skynet, Hotbird Plus, Inmarsat III,	A	
03	Stainless steel washers	18% Cr, 8% Ni, Fe BS 970.1 BS 4320 AISI 304 or 321	25-LC0006 Various Suppliers	Torquing S-3-04-012 Fillet locking S-3-02-051	Mechanical fastening. Payload integration	L	V	3-4	W1	A	A	NA	NA	NA	Skynet, Hotbird Plus, Inmarsat III,	A	
04	Isometric stainless steel nuts	18% Cr, 8% Ni, Fe, BS 6105 GRADE A2-70 AISI 304 or 321	25-LC0007 Various Suppliers	Torquing S-3-04-012 Fillet locking S-3-02-051	Mechanical fastening. Payload integration	L	V	3-4	W1	A	A	NA	NA	NA	Skynet, Hotbird Plus, Inmarsat III,	A	
05	Stainless Steel wire	18% Cr, 8% Ni, Fe 316 S11	03-LC0017	Locking		L	V	3-4	W1	A	A	NA	NA	NA	Skynet, Hotbird Plus, Inmarsat III	A	
06	Stainless steel bar	18% Cr, 8% Ni, Fe 321 S20	AISI 321 S20	No finish	Earthing stud MLI	L	V	3-4	W1	A	A	NA	NA	NA	PPF	A	
07	Stainless steel washer	18% Cr, 8% Ni, Fe 303 S31	02-LC0006	No finish	Grounding MLI	L	V	3-4	W1	A	A	NA	NA	NA	Skynet, Hotbird Plus, Inmarsat III	A	
08	Stainless steel dowel pin	18% Cr, 8% Ni, Fe 321 S20	BS 1804/2/1	No finish	Integration	L	V	3-4	W1	A	A	NA	NA	NA	ASAR	A	
09	Stainless steel crinkle washer	18% Cr, 8% Ni, Fe	DIN 17440 BS4463	No finish	Integration	L	V	3-4	W1	A	A	NA	NA	NA	GOMOS	A	
10	Stainless steel bar	18% Cr, 8% Ni, Fe	BS S80	No finish	Small mech parts	L	V	3-4	W2	A	A	NA	NA	NA	GOMOS	A	
11	Stainless steel wire	18% Cr, 8% Ni, Fe 302 S26	BS 2056	Acid cleaned PS 2089 Molykote 106 PS 2051	Spring	L	V	3-4	W1	A	A	NA	NA	NA	GOMOS	A	

Declared Materials List

GROUP 7 FILLER METALS AND SOLDERS

1	2	3	4	5	6	7			8	9							10
										9.1					9.2	9.3	
Item No.	Commercial Identification	Chemical Nature and Product Type	Procurement, Manufacturer / Supplier, Specification and Issue.	Summary of Processing Parameters	Use and Location	Environmental Codes R	A	T	Size Code	Corr	SCC	Flam	OFFG	OUTG	Justification for Approval	Contractors App.	Cust. App.
01	Sn/Pb LOW MELTING POINT ROSIN CORED SOLDER WIRE	63% Sn, 37% Pb, ESA PSS-01-708/1 S14	09-LC0004	Soldering of silver surfaces ESA PSS-01-708 S-4-03-003	Payload integration	L	V	3-4	W0	A	A	NA	NA	NA	ERS-1, Telecom2, Hispasat, Eutelsat, Hotbird,	A	

Declared Materials List

GROUP 9 :GLASSES

1	2	3	4	5	6	7			8	9							10
										9.1					9.2	9.3	
Item No.	Commercial Identification	Chemical Nature and Product Type	Procurement, Manufacturer / Supplier, Specification and Issue.	Summary of Processing Parameters	Use and Location	Environmental Codes R	A	T	Size Code	Corr	SCC	Flam	OFFG	OUTG	Justification for Approval	Contractors App.	Cust. App.
01	Optic cube	Glass, vacuum metallised with chromium	05-LC0054 Pilkington	Bonded in place with items 10-07/8.	Alignment, redundant after test but remain in place	L	V	3-4	W1	NA	NA	NA	NA	NA	Skynet MHS ASAR	A	

Declared Materials List

GROUP 10 ADHESIVES

1	2	3	4	5	6	7			8	9							10
										9.1					9.2	9.3	
Item No.	Commercial Identification	Chemical Nature and Product Type	Procurement, Manufacturer / Supplier, Specification and Issue.	Summary of Processing Parameters	Use and Location	Environmental Codes R	A	T	Size Code	Corr	SCC	Flam	OFFG	OUTG	Justification for Approval	Contractors App.	Cust. App.
01	Redux 312 UL	Epoxy film	23-LC-0008 CIBA	PS 2023 30 mins @ 120C	Sandwich panel	L	V	3-4	W3	NA	NA	NA	NA	F	Qual report TR-MMS-395	A	
02	Eccobond 56c / catalyst 9	Two part silver filled epoxy	09-LC0024 09-LC0027 Emerson and Cuming	Bonding S-4-02-020 Mix: 4:1 pbw Cure: 24 hrs @ RT	Electrically conductive bonding Payload integration	L	V	3-4	W1	NA	NA	NA	NA	P	Skynet, Hispasat, Inmarsat III, SOHO, ASAR, Hotbird Plus,	A	
03	Eccobond 285 / catalyst 9	High thermal conductivity epoxy	23-LC0014	100/3.5, cure 24h/RT S-4-02-036	Insert bonding	L	V	3-4	W2	NA	NA	NA	NA	P	3116-YF002-RPZ	A	
04	Scotchweld ec 2216	Modified epoxy with accelerated amine curing agent	23-LC0053 3M	S-4-02-053 Mix: 5:7 pbw Cure: 24 hrs/T	General bonding Payload integration	L	V	3-4	W2	NA	NA	NA	NA	F	Hispasat, Hotbird	NASA MUA agreed	
05	Epikote 828 / Versamid 140	Epoxy adhesive. Silica filler is used in these applications to thicken the adhesive	MS1063	PS 2024 PS 2143	Locking, bonding.	L	V	3-4	W1	NA	NA	NA	NA	P	Skynet Inmarsat 3	A	
06	EA9395	Epoxy adhesive	CDST-GL001-STE	7d / RT	Bonding	L	V	3-4	W2	NA	NA	NA	NA	P	ASAR	A	
07	FM410	Epoxy foam adhesive	Cyanamid 23-LC0041	1h@ 175C	Panels assy	L	V	3-4	W3	NA	NA	NA	NA	P	SOHO MHS Skynet	A	
07	RTV 566	Silicone adhesive	23-LC0051 General Electric	7d/RT	Optic cube bonding	L	V	3-4	W1	NA	NA	NA	NA	P	ASAR	A	
08	SS 4155	Primer for item 10-09	11-LC0026 General Electric	30mins/RT	Primer	L	V	3-4	W0	NA	NA	NA	NA	P	ASAR	A	
09	RTV 142	Silicone adhesive	23-LC0027 General Electric	24hrs/RT	MLI pin bonding	L	V	3-4	W1	NA	NA	NA	NA	P	GOMOS	A	
10	DC 1204	Primer for item 10-07	11-LC0017 Dow Corning	30mins/RT	Primer	L	V	3-4	W0	NA	NA	NA	NA	P	GOMOS	A	
11	Uralane 5750	Polyurathane coating/adhesive	MIL-F-46058	PS 2024	Coating	L	V	3-4	W1	NA	NA	NA	NA	P	ASAR	A	

Declared Materials List

GROUP 11 ADHESIVE TAPES

1	2	3	4	5	6	7			8	9							10
										9.1					9.2	9.3	
Item No.	Commercial Identification	Chemical Nature and Product Type	Procurement, Manufacturer / Supplier, Specification and Issue.	Summary of Processing Parameters	Use and Location	Environmental Codes R	A	T	Size Code	Corr	SCC	Flam	OFFG	OUTG	Justification for Approval	Contractors App.	Cust. App.
01	Sheldahl tape G 401100	Polyimide tape acrylic adhesive	07-LC0016 Sheldahl	Edge seal panels	Payload integration	L	V	3-4	W1	NA	NA	NA	NA	P	ISO, ERS, Hispasat, Hotbird	A	
02	Y9460	Tape,double-sided, acrylic adhesive	3M 23-LC0035	S-4-04-018	Thermal blanket attachment	L	V	3-4	W1	NA	NA	NA	NA	P	3158-26001-RPZ	A	
03	Chofoil CCJ	Aluminium tape with electrically conductive PSA	17-LC0023 Chomerics	Hand applied self-adhesive tape	Grounding	L	V	3-4	W1	NA	NA	NA	NA	P	ASAR	A	
04	Sheldahl tape G 401902	FEP metallised with silver over inconel, 966 PSA	MS 1124 Sheldahl	Hand applied self-adhesive tape	Thermal control	L	V	3-4	W1	NA	NA	NA	NA	P	GOMOS	A	

Declared Materials List

HIRDLS — GROUP 12 COATINGS, VARNISHES, PAINTS, PRIMERS, INKS

1	2	3	4	5	6	7			8	9							10
										9.1					9.2	9.3	
Item No.	Commercial Identification	Chemical Nature and Product Type	Procurement, Manufacturer / Supplier, Specification and Issue.	Summary of Processing Parameters	Use and Location	Environmental Codes R	A	T	Size Code	Corr	SCC	Flam	OFFG	OUTG	Justification for Approval	Contractors App.	Cust. App.
01	Marconi ink W3	White, two part epoxy ink	23-LC0025 23-LC0007 09-LC0051 MMS Portsmouth (Manufactured to S-4-02-048)	Painting S-4-07-004, Cure: 12 hrs @ RT Mix: 5:1 pbw	White marking ink for identification	L	V	3-4	W0	N A	N A	N A	N A	F	Skynet, Hotbird Plus, Inmarsat III,	NASA MUA agreed	
02	Solithane S113 / Catalyst C113-300	Polyurethane coating formulation	09-LC0010 23-LC0003 Morton International	Bonding S-4-02-054 Mix: 100:73 Cure: 24 hrs @ 70 °C	Thread locking	L	V	3-4	W1	N A	N A	N A	N A	P	Inmarsat III, Artemis, Skynet, Nilesat	A	
03	PSG 120 FD	White silicone based paint	11-LC0015 AD Aerospace Finishers	S-4-01-018	Thermal control	L	V	3-4	W1	N A	N A	N A	N A	P	Skynet, MHS Inmarsat III	A	

Declared Materials List

HIRDLS — GROUP 13 LUBRICANTS

1	2	3	4	5	6	7			8	9							10
										9.1					9.2	9.3	
Item No.	Commercial Identification	Chemical Nature and Product Type	Procurement, Manufacturer / Supplier, Specification and Issue.	Summary of Processing Parameters	Use and Location	Environmental Codes R	A	T	Size Code	Corr	SCC	Flam	OFFG	OUTG	Justification for Approval	Contractors App.	Cust. App.
01	Molykote 106	MoS2	Dow Corning MS1078	PS 2051 Cure 1h @ 200C	Mechanisms	L	V	3-4	W1	N A	N A	N A	N A	P	PPF	A	
02	Braykote 601	Flouro grease	MS1025	PS 2068 CPK 945/16	Mechanisms	L	V	3-4	W1	N A	N A	N A	N A	P	PPF	A	
03	FC 721 barrier fluid	Fluorocarbon	Free issue from RAL	Apply as thin film by brush and allow to dry at RT	Anti –spread barrier for grease13-02	L	V	3-4	W0	N A	N A	N A	N A	P	PPF	A	

Declared Materials List

GROUP 14 POTTING COMPOUNDS

1	2	3	4	5	6	7			8	9							10
										9.1					9.2	9.3	
Item No.	Commercial Identification	Chemical Nature and Product Type	Procurement, Manufacturer / Supplier, Specification and Issue.	Summary of Processing Parameters	Use and Location	Environmental Codes R	A	T	Size Code	Corr	SCC	Flam	OFFG	OUTG	Justification for Approval	Contractors App.	Cust. App.
01	Stycast 1090 SI / Cat 9	Epoxy encasulant	09-LC0019 & 09-LC0029	S-4-02-034 24h @ RT + 24h @ 60C	Insert potting	L	V	3-4	W3	NA	NA	NA	NA	P	Skynet AATSR	A	

Declared Materials List

GROUP 15: REINFORCED PLASTICS

1	2	3	4	5	6	7			8	9							10
										9.1					9.2	9.3	
Item No.	Commercial Identification	Chemical Nature and Product Type	Procurement, Manufacturer / Supplier, Specification and Issue.	Summary of Processing Parameters	Use and Location	Environmental Codes R	A	T	Size Code	Corr	SCC	Flam	OFFG	OUTG	Justification for Approval	Contractors App.	Cust. App.
01	M55J / RS-3	CFRP prepreg	YLA 05-LC0091	2h @ 177C S-4-04-022	Panel skins	L	V	3-4	W3	NA	NA	NA	NA	P	3073-18003-RPZ	A	
02	Cycom 69 GF, 1K and 3K	T300 CFRP prepreg	Cytek 05-LC0068	S-4-04-026 20 mins @ 120 + 3h @ 175C	Cleats and panel inserts	L	V	3-4	W2	NA	NA	NA	NA	P	3116-YF002-RPT	A	
03	Epoxy glass laminate	EP3	Tufnol 05-LC0008	S-4-04-018	Thermal standoffs	L	V	3-4	W1	NA	NA	NA	NA	P	SOHO	A	
04	Copper clad laminate	Epoxy glass, copper clad	IPC 4101/21		PCB	L	V	3-4	W1	NA	NA	NA	NA	P	PPF	A	

Declared Materials List

GROUP 16: ELASTOMERS

1	2	3	4	5	6	7			8	9							10
										9.1					9.2	9.3	
Item No.	Commercial Identification	Chemical Nature and Product Type	Procurement, Manufacturer / Supplier, Specification and Issue.	Summary of Processing Parameters	Use and Location	Environmental Codes R	A	T	Size Code	Corr	SCC	Flam	OFFG	OUTG	Justification for Approval	Contractors App.	Cust. App.
01	ELKOSIL 9N	Silicone tube	DIN 40625	NA	seal	L	V	3-4	W2	NA	NA	NA	NA	P	GOMOS	A	

Declared Materials List

GROUP 17 THERMOPLASTICS

1	2	3	4	5	6	7			8	9							10
										9.1					9.2	9.3	
Item No.	Commercial Identification	Chemical Nature and Product Type	Procurement, Manufacturer / Supplier, Specification and Issue.	Summary of Processing Parameters	Use and Location	Environmental Codes R	A	T	Size Code	Corr	SCC	Flam	OFFG	OUTG	Justification for Approval	Contractors App.	Cust. App.
01																D	
02																D	
03																D	
04																D	
05	PTFE sleeve	Tube	Hellerman 08-LC0002	ES 610	Ident sleeves	L	V	3-4	W1	NA	NA	NA	NA	P	Inmarsat 3	A	
06	PTFE	Machined rod	06-LC0003 ICI	Etched	MLI stud	L	V	3-4	W1	NA	NA	NA	NA	P	ASAR	A	
07	Gude-E –space 18 DPT-H lacing tape	Dacron polyester cord	Gudebrod 12-LC0003	Lacing S-3-05-002	Harness	L	V	3-4	W1	NA	NA	NA	NA	P	Silex Artemis MHS	A	
08	Kynar Sk 32	PVF shrink sleeve	08-LC0007 Hellerman	Harness S-3-02-013	Harness	L	V	3-4	W1	NA	NA	NA	NA	P	Skynet	A	
09	Kynar RT 850	PVF shrink sleeve	08-LC0003 Raychem	Harness S-3-02-013	Harness	L	V	3-4	W1	NA	NA	NA	NA	P	ASAR Silex	A	

Declared Materials List

GROUP 18: THERMOSET PLASTICS & FILMS

1	2	3	4	5	6	7			8	9							10
										9.1					9.2	9.3	
Item No.	Commercial Identification	Chemical Nature and Product Type	Procurement, Manufacturer / Supplier, Specification and Issue.	Summary of Processing Parameters	Use and Location	Environmental Codes R	A	T	Size Code	Corr	SCC	Flam	OFFG	OUTG	Justification for Approval	Contractors App.	Cust. App.
01	VDA Kapton	Polyimide, aluminised	Sheldahl 05-LC0011	S-4-04-018	MLI	L	V	3-4	W2	NA	NA	NA	NA	F	3158-26001-RPZ Waiver reqd	NASA MUA agrred	
02	Black Kapton film	Carbon filled polyimide, plain and aluminised	Sheldahl 07-LC0020	S-4-04-018	MLI	L	V	3-4	W2	NA	NA	NA	NA	P	3158-26001-RPZ	A	
03	Vespel SP 3	Polyimide rod	06-LC0011 DuPont	Machined	Mech parts	L	V	3-4	W1	NA	NA	NA	NA	P	MHS Skynet	A	
04	Aramid thread, K403-70/3	Pure, non-lubricated, un-coated aramid fibre	MS1037	S-4-04-018	MLI interlayer sewing	L	V	3-4	W1	NA	NA	NA	NA	P	ASAR	A	

Declared Materials List

GROUP 19: WIRES AND CABLES

1	2	3	4	5	6	7			8	9							10
										9.1					9.2	9.3	
Item No.	Commercial Identification	Chemical Nature and Product Type	Procurement, Manufacturer / Supplier, Specification and Issue.	Summary of Processing Parameters	Use and Location	Environmental Codes R	A	T	Size Code	Corr	SCC	Flam	OFFG	OUTG	Justification for Approval	Contractors App.	Cust. App.
01	Wire, Raychem 44	Silver plated copper conductor, PVDF insulation	03-LC0002 Raychem	S-4-04-018	MLI grounding wire	L	V	3-4	W1	NA	NA	NA	NA	P	Skynet	A	

DISTRIBUTION LIST

INTERNAL	EXTERNAL
R McKay	N Morris (RAL)
I Stewart	Delivery Data Packs
T Forward	
A Stewart	
N Crossland	
A Foot	

CHANGE RECORD

CHANGE NUMBER	CLASS	CHANGE DETAILS	ISSUE
3164-00068	-	First Issue	A
3164-00114	II	Update for CDR	1
3164-00335	II	Update for equipment delivery	2

SECTION 2

Declared Processes List PL-MMS-212

HIRDLS

PL-MMS-212
(3164-18003-LIS)
Issue 2

HIGH RESOLUTION DYNAMICS LIMB SOUNDER

Originator: R McKay Date: 28 September, 1999

Subject/Title **DECLARED PROCESSES LIST**

Description/Summary/Contents:

A list of all processes used to manufacture the HIRDLS equipment supplied by MMS.

Keywords: STH, SSH, FM, Processes

Purpose of this Document:

Reviewed/Approved by:			
Date (yy-mm-dd):	99-09-28		

Matra Marconi Space
Anchorage Road
Portsmouth
Hampshire PO3 5PU
England

EOS

ORIGINAL WHEN RED

HIRDLS
DECLARED PROCESSES LIST
PL-MMS-212

Responsible Engineer	R. McKay	Date	28/09/99
Quality Assurance		Date	28-9-99
Project Manager		Date	28/9/99

© MATRA MARCONI SPACE UK LIMITED

THE COPYRIGHT IN THIS DOCUMENT IS THE PROPERTY OF MATRA MARCONI SPACE UK LIMITED This document is supplied by Matra Marconi Space UK Limited on the express terms that it is to be treated as confidential and that it may not be copied, used or disclosed to others for any purpose except as expressly authorised under the terms of Contract No N2A 3R 0386

Any person, other than the authorised holder, who finds or otherwise obtains possession of the document, should post it, together with his/her name and address, to the Registry, Matra Marconi Space UK Limited, Anchorage Road, Portsmouth, England, PO3 5PU Postage will be refunded

CONTENTS

1.0 INTRODUCTION

2.0 TABULATION EXPLANATION

3.0 PROCESSES LIST

1.0 SCOPE

This document contains a list of processes used by MMS for manufacture and assembly of HIRDLS equipment

2.0 TABULATION EXPLANATION

A ten column table defines the information The columns are as follows:

Column 1: **ITEM NUMBER:**
An arbitrary number specific to each process. The processes appear in 17 groups described below

GROUP NUMBER	PROCESS TYPE
1	ADHESIVE BONDING
2	COMPOSITE MANUFACTURE
3	ENCAPSULATION/MOULDING
4	PAINTING/COATING
5	CLEANING
6 *	WELDING
7	CRIMPING/STRIPPING/WIRE WRAPPING
8	SOLDERING/BRAZING
9	SURFACE CONVERSION
10 *	PLATING
11 *	MACHINING
12 *	FORMING
13 *	HEAT TREATMENT
14	SPECIAL FABRICATION
15	MARKING
16	MISCELLANEOUS
17 *	INSPECTION

* No processes in these categories are used

Column 2. **PROCESS IDENTIFICATION:**
The process name, title, clear identification, etc.

Column 3: **SPECIFICATION:**
The document number and issue.

Column 4 **DESCRIPTION:**
Brief process description.

Column 5· **USAGE AND LOCATION:**
Location of item on spacecraft.

Column 6· **MANUFACTURER NAME:**
Name (of the one who applies the process)

Column 7: **ASSOCIATED ITEMS:**
Corresponding items in the materials list.

Column 8 **CRITICALITY OF PROCESS:**
A critical process is defined as one which:
1) The quality cannot be assessed by visual examination alone.
2) Which has caused problems previously.
3) With which there has been no previous application experience.

Column 9 1 **JUSTIFICATION:**
Either qualification plans or previous space programmes.

Column 9.2 **STATUS:**
To identify the qualification status of the process a letter code is selected from the following table:

STATUS
A = Approved
O = Open investigation/under qualification
D = Deleted

Column 10: **CUSTOMER APPROVAL:**
This column is to be completed by the customer.

3.0 DECLARED PROCESSES LIST

The declared processes list is presented in tables in the following pages, according to the format described in 2 0

Declared Process List

HIRDLS | GROUP 1 ADHESIVE BONDING

1	2	3	4	5	6	7	8	9.1	9.2	10
Item No.	Process Identification	Specification	Process Description	Use and Location	Manufacturers Name	Materials List No.	Criticality of Process	Justification for Approval	Contractors Approval	Customer Approval
01	Adhesive bonded honeycomb structures	PS 2023	Sandwich panel fabrication using Redux 312UL	Structure	MMS	1-01 10-1 15-01	No	Skynet Qual report TR-MMS-395	A	
02	Manufacturing Procedure for Bonding of Parts Using Eccobond 56 C with Catalyst 9	S-4-02-020	Electrically Conductive Bonding Cure 24 Hrs RT Mix 4:1 PBW	Conductive grounding bonding	MMS	1-05 10-2	No	Skynet, Hispasat, Inmarsat III, SOHO, ASAR, Hotbird Plus	A	
03	Fillet locking	S-3-02-051	Fastener locking using Scotchweld 2216	Structure	MMS	4-02 6-03 6-04 10-04	No	Hispasat, Hotbird	A	
04	Bonding with Scotchweld EC 2216	S-4-02-053 S-3-02-011	General Bonding Cure 24 Hrs RT Mix 5:7 PBW	Integration	MMS	1-06 1-09 10-04	No	Hispasat, Hotbird	A	
05	Bonding with Eccobond 285	S-4-02-036	Thermally conductive bonding	Structure assembly	MMS	10-03	No	Skynet , Hispasat, Inmarsat	A	
06	Fastener locking	PS 2143	Thread locking	Structure assembly	MMS	10-05	No	Skynet	A	
07	Cleat bonding using Hysol EA 9395	CDST-HB001-STE, method 46	Cleat bonding	Structure assembly	MMS	10-06	No	Orion 2	A	
08	Adhesive bonding	PS 2024	Non-structural attachment	Label bonding	MMS	10-05	No	Skynet, Nilesat	A	
09	Bonding with RTV 566 and primer SS4155	S-4-02-062	RT cure	Optic cube bonding	MMS	09-01 10-07 10-08	No	ASAR	A	
10	Insert bonding	S-3-04-037	1 Hr / 175C	Insert bonding in panels	MMS	10-07 4-01	No	TR-MMS-395	A	

Declared Process List

HIRDLS | GROUP 2: COMPOSITE MANUFACTURING

1	2	3	4	5	6	7	8	9.1	9.2	10
Item No.	Process Identification	Specification	Process Description	Use and Location	Manufacturers Name	Materials List No.	Criticality of Process	Justification for Approval	Contractors Approval	Customer Approval
01	Composite faceskins layup and cure using cyanate ester cfrp	S-4-04-022	Autoclave / vac bag process	Structure panels skins	MMS	15-01	No	MHS Inmarsat III Ressat	A	
02	Epoxy cfrp use	S-4-04-026	Autoclave / vac bag process	Cleats	MMS	15-02	No	MHS AATSR	A	

Declared Process List

HIRDLS | GROUP 3: ENCAPSULATION

1	2	3	4	5	6	7	8	9.1	9.2	10
Item No.	Process Identification	Specification	Process Description	Use and Location	Manufacturers Name	Materials List No.	Criticality of Process	Justification for Approval	Contractors Approval	Customer Approval
01	Insert bonding	S3-02-034	Encapsulation of inserts into sandwich panel	Structure	MMS	14-01 10-10	No	Inmarsat III MHS Skynet	A	

Declared Process List

HIRDLS | GROUP 4: PAINTING AND COATING

1	2	3	4	5	6	7	8	9.1	9.2	10
Item No.	Process Identification	Specification	Process Description	Use and Location	Manufacturers Name	Materials List No.	Criticality of Process	Justification for Approval	Contractors Approval	Customer Approval
01	Application of white thermal control paint	S-4-04-052	Paint application by spray process	Structure exterior in specific locations	MMS	12-03 15-03	No	Inmarsat III Ressat Skynet	A	
02	Application of Molykote	PS 2051	Lubricant application	Mechanisms lubricant	MMS	4-01 13-01	No	PPF	A	

Declared Process List

HIRDLS | GROUP 5 CLEANING

1	2	3	4	5	6	7	8	9.1	9.2	10
Item No.	Process Identification	Specification	Process Description	Use and Location	Manufacturers Name	Materials List No.	Criticality of Process	Justification for Approval	Contractors Approval	Customer Approval
01	Cleaning	PS 2058	Cleaning for pretreatment	General	MMS	1-02 1-03 1-07 1-08 6-01	No	General space process	A	
02	Solvent Cleaning of Parts and Assemblies	S-3-02-064	General Cleaning to be used in conjunction with the procedures for Bonding, Painting and Potting	All	MMS	NA	No	General space process	A	
03	Acid cleaning (passivation) of stainless steel	PS 2089	Immersion in solution of hydrofluoric and nitric acids	Stainless steel mechanisms parts	MMS	6-11	No	GOMOS	A	

Declared Process List

HIRDLS | GROUP 7 CRIMPING / STRIPPING / WIRE WRAPPING

1	2	3	4	5	6	7	8	9.1	9.2	10
Item No.	Process Identification	Specification	Process Description	Use and Location	Manufacturers Name	Materials List No.	Criticality of Process	Justification for Approval	Contractors Approval	Customer Approval
01	Elec assy, Manf Standard	ES 610 S-3-05-018 contains equivalent information	Ident sleeves onto harness	Motor harness	MMS	17-05	No	Skynet	A	

Declared Process List

HIRDLS | GROUP 8 SOLDERING AND BRAZING

1	2	3	4	5	6	7	8	9.1	9.2	10
Item No.	Process Identification	Specification	Process Description	Use and Location	Manufacturers Name	Materials List No.	Criticality of Process	Justification for Approval	Contractors Approval	Customer Approval
01	Manual Soldering Using Solders with Tin and Lead as Major Constituents	S-4-03-003 ESA PSS-01-708	Manual Soldering	MLI grounding	MMS	7-01	No	ERS-1, Telecom 2, Hispasat, Hotbird	A	

Declared Process List

HIRDLS | GROUP 9 SURFACE CONVERSION TREATMENTS

1	2	3	4	5	6	7	8	9.1	9.2	10
Item No.	Process Identification	Specification	Process Description	Use and Location	Manufacturers Name	Materials List No.	Criticality of Process	Justification for Approval	Contractors Approval	Customer Approval
01	Anodising	PS 2107 or PS2110	Anodising to provide electrical isolation of Al and wear resistance	Mech parts	MMS	1-02 1-03 1-11 1-12	No	PPF GOMOS	A	
02	Anodising of Al alloys	S3-01-004	Anodised by parts supplier	Inserts	Shurlok	1-10	No	Hotbird Koreasat	A	
03	Anodising of Ti alloys	DTD 942	Anodising of Ti fasteners for controlled lubricity	Ti fasteners	Approved supplier	4-01	No	ASAR Skynet	A	
04	Manufacturing Procedure for the chromate conversion of Aluminium alloys using Alocrom 1200.	S-4-01-007 PS 2068	Alocrom 1200	Small structural items	MMS	1-02 1-03 1-041-09	No	Skynet 4, Inmarsat, Telecom 2, Eutelsat, Hotbird	A	

Declared Process List

HIRDLS | GROUP 14 SPECIAL FABRICATION

1	2	3	4	5	6	7	8	9.1	9.2	10
Item No.	Process Identification	Specification	Process Description	Use and Location	Manufacturers Name	Materials List No.	Criticality of Process	Justification for Approval	Contractors Approval	Customer Approval
01	Manufacture of multi-layer insulation (thermal blankets)	S4-04-018	Assembly of thermal blanket layers, grounding points etc and integration to structure	MLI	MMS	11-02,15-03, 17-01, 17-02, 17-03, 17-04, 18-01, 18-02,18-04	NO	Skynet ASAR Hotbird	A	

Declared Process List

HIRDLS | GROUP 15 MARKING

1	2	3	4	5	6	7	8	9.1	9.2	10
Item No.	Process Identification	Specification	Process Description	Use and Location	Manufacturers Name	Materials List No.	Criticality of Process	Justification for Approval	Contractors Approval	Customer Approval
01	Marking with Marconi White Ink (W3)	S-4-07-004	General Marking Cure 12 Hrs RT + 12 Hrs @ 60°C.	Payload Integration, panels and piece parts identification	MMS	M12-001	NO	SOHO PROS, ERS 1, Skynet, Hispasat	A	
02	Use of Fotofoil label	S-4-07-021	Lithography process from artwork. Bonding process 1-04, DML item 10-04	Formation of labels for equipment identification	MMS	1-06		Inmarsat III Hotbird Skynet	A	

Declared Process List

HIRDLS | GROUP 16 MISCELLANEOUS PROCESSES

1	2	3	4	5	6	7	8	9.1	9.2	10
Item No.	Process Identification	Specification	Process Description	Use and Location	Manufacturers Name	Materials List No.	Criticality of Process	Justification for Approval	Contractors Approval	Customer Approval
01	Torque Requirements for Threaded Devices	S-3-04-012	Closing fasteners to required torque	Structure Integration	MMS	4-02 6-03 6-04	No	Skynet 4, Hotbird, Inmarsat	A	
02	Installation of Wire Thread Inserts	S-3-04-052	Installation	Payload Integration	MMS	6-02	No	Skynet 4, Hotbird	A	
03	Preparation of Bonding Surfaces	S-4-04-013	Abrasion, Cleaning Methods and Water-Break Test	Bonding Operations	MMS	15-01 15-02	No	Skynet 4, Inmarsat	A	
04	Packaging and Handling of Materials	S-4-07-019 S-3-07-001	General Standard for Packaging and Handling of Spacecraft Equipment	General	MMS	Not Relevant	No	Skynet 4, Inmarsat	A	
05	Standard for Requirements of Work Environment Control	S-3-07-006 (CDSP-DB010-STE)	Clean Work Area Conditions	General	MMS	Not Relevant	No	Skynet 4, Inmarsat, Hotbird Plus	A	
06	Preparation of Marconi Ink W3	S-4-02-048	Preparation of item M12-001	Mixture of resin and titanium dioxide powder	MMS	12-01	No	Hotbird, ST-1, Astra 2B	A	
07	Age Limits of Chemicals	S-3-07-019 (CDSP-FG005-PRE)	Control	General	MMS	General	No	All projects	A	
08	Handling and Storage of Chemicals	S-3-07-005 (CDSP-FG005-PRE)	Control	General	MMS	General	No	All projects	A	
09	Lacing	S-3-05-002	Harness assembly	Integration	MMS	17-07	No	Silex MHS	A	
10	Installation of shrink fit parts	S-3-05-013 (ES 610)	Harness assembly	Integration	MMS	17-05 17-08 17-09	No	Skynet 4, Inmarsat, Silex	A	

DISTRIBUTION LIST

INTERNAL	EXTERNAL
R McKay	N Morris (RAL)
I Stewart	Delivery Data Packs
T Forward	
A Stewart	
N Crossland	
A Foot	

CHANGE RECORD

CHANGE NUMBER	CLASS	CHANGE DETAILS	ISSUE
3164-00069	-	First Issue	A
3164-00113	II	Update for CDR	1
3164-00336	II	Update for equipment delivery	2

3

SECTION 3

As Designed as Built Reconciliation (ABCL)

SECTION 3

Waiver List, Status & Implemented Waivers

M A T R A M A R C O N I S P A C E U K L I M I T E D

ANCHORAGE ROAD

PORTSMOUTH

PO3 5PU

ENGLAND

TELEPHONE : (01705)664966

TELEX : 86666

Configuration Control System

Waiver/Deviation Listing as at 10-DEC-99

PROJECT : HIRDLS

Report requested where :

Project code equals '3164'

Waiver number is 'HIR-R%-SA%' 'FM'

D = Decision

A - Approved
C - Cancelled
D - Deferred
P - Pending
R - Rejected
S - Superceded
W - Withdrawn

DISTRIBUTION :

(1)
(2)
(3)

Waiver Number	Waiver Description	Models Affected	Document Number	Document Issue	Waiver Received	Waiver Closed	Issue	WRB Decision Level	WRB Decision Date	WRB Decision D
HIR-RD-SA002-MMP	LTM SUNSHIELD ASSEMBLY LOW MASS RESONANCE OUT OF SPECIFICATION	FM	HR1L101	1	09-DEC-99	29-NOV-99	1	3	16-SEP-99	A
								4	29-NOV-99	A

Waiver Number	Waiver Description	Models Affected	Document Number	Serial Number	Applicable Equipment
HIR-RD-SA002-MMP	LTM SUNSHIELD ASSEMBLY LOW MASS RESONANCE OUT OF SPECIFICATION	FM	HR1L101	FM001	LTM SUNSHIELD

MATRA MARCONI SPACE UK LIMITED

REQUEST FOR DEVIATION/WAIVER

Request Number	HIR-RD-SA002-MMP (PA-MMS-426)
PROJECT HIRDLS	SHEET 1 of 1 SHEETS

Deviation	X	Waiver		MODEL FM	SUBMITTING COMPANY Matra Marconi Space UK Ltd Portsmouth

PART NAME:	PART NUMBER	QUANTITY:
LTM Sunshield Assembly	HR1L101	1

CONTRACT/ORDER NUMBER	SERIAL NUMBER
N2A 3R 0386	FMC01

OTHER DEVIATIONS/WAIVERS ON PART	REJECT NOTE NUMBER
HIR-RD-SA001-MMP (raised on the life test model)	N/A

MAIN ASSEMBLY NUMBER	SUBMITTING COMPANY REFERENCE NUMBER
HR1L101	N/A

DETAILS OF DEVIATION/WAIVER AND REASON FOR APPLICATION

A resonance was detected at approximately 65Hz during the Z axis low level sine survey This contravenes the stiffness requirement defined in Specification No SP-HIR-050 Issue D Paragraph 3 4 4 The specification states that the sunshield assembly, with the door in the latched position, shall have a first resonant frequency of greater than 120Hz

The sunshield door and aperture plate were designed in conjunction with the STH structure as they are an integral part of the overall instrument It is considered that the 120Hz requirement is more applicable to the non-structural, bolt on items such as the hinge and latch mechanisms FE predictions at instrument level confirm a door/aperture plate resonant frequency at approximately 60Hz

Prototype qualification level vibration tests have been performed on the SSH assembly without detectable structural degradation to the sunshield door, aperture plate or mechanism No significant variations were detected in the results of the low level sine surveys performed before or after qualification tests These results are virtually identical to those obtained during the testing of the LTM model (subject of a previous deviation SA001)

SUBMITTED BY A J Foot QUALITY SIGNATURE: DATE: 15-9-99

PROPOSED RECOVERY ACTION	RECOVERY ACTION CLEARED
Request accept deviation	INSPECTOR'S STAMP DATE

DEVIATION WAIVER ADVERSELY AFFECTS

FUNCTION	MASS	FORM	FIT
RELIABILITY	LIFE	INTERCHANGE ABILITY	SAFETY
MAINTAINABILITY	DOCUMENTATION	MISSION OBJECTIVE	
CUSTOMER INTERFACE	OTHERS	HAS NO ADVERSE AFFECT	

MRB REFERENCE No. (s)

AUTHORITY	DESIGN	STRESS	QUALITY	PROJECT MANAGER
EQUIPMENT LEVEL	ACCEPTABLE/NOT ACCEPTABLE SIGNATURE DATE:	ACCEPTABLE/NOT ACCEPTABLE SIGNATURE DATE:	ACCEPTABLE/NOT ACCEPTABLE SIGNATURE DATE:	SIGNATURE DATE:
SUB-SYSTEM LEVEL	ACCEPTABLE/~~NOT ACCEPTABLE~~ SIGNATURE DATE: 16/9/99	ACCEPTABLE/NOT ACCEPTABLE SIGNATURE DATE: 16/9/99	ACCEPTABLE/~~NOT ACCEPTABLE~~ SIGNATURE DATE: 16/9/99	SIGNATURE DATE: 16/9/99
PRIME CONTRACTOR	ACCEPTABLE/~~NOT ACCEPTABLE~~ SIGNATURE DATE: 16/9/99	ACCEPTABLE/NOT ACCEPTABLE SIGNATURE DATE: 16/9/99	ACCEPTABLE/~~NOT ACCEPTABLE~~ SIGNATURE DATE: 16/9/99	SIGNATURE DATE: 16/9/99
CUSTOMER	QUALITY AUTHORITY DECISION SIGNATURE DATE: 26/11/99		DESIGN AUTHORITY DECISION SIGNATURE DATE: 29/11/99	

ENDORSE REQUEST NUMBER ON FORM 640 - YES/NO - SIGNATURE DATE:

SECTION 3

Major Non-Conformance Reports

SECTION 3

Major Non-Conformance Reports

None Applicable

SECTION 3

Test Procedures

HIRDLS

TP-MMS-452
(3164-SA030-TPF)
Issue 2

HIGH RESOLUTION DYNAMICS LIMB SOUNDER

Originator R Coupe Date 21 September, 1999

Subject/Title: **Sunshield Assembly FM Test Procedure**

Description/Summary/Contents

Keywords FM, Sunshield Assembly, Test

Purpose of this Document Test procedure for FM Sunshield Assembly

Reviewed/Approved by Date (yy-mm-dd)			

Matra Marconi Space
Anchorage Road
Portsmouth
Hampshire PO3 5PU
England

EOS

ORIGINAL WHEN RED

SUNSHIELD ASSEMBLY
FM TEST PROCEDURE

Prepared by pp N Crossland *Date* 21st Sept 1999

R T S COUPE

Checked by N/A *Date*

Approved by *Date* 23-9-99.

A. J Foot

Authorised by *Date*

I K STEWART

© MATRA MARCONI SPACE UK Limited 1998

Matra Marconi Space UK Limited owns the copyright of this document which is supplied in confidence and which shall not be used for any purpose other than that for which it is supplied and shall not in whole or in part be reproduced, copied, or communicated to any person without written permission from the owner

MATRA MARCONI SPACE UK Limited
P.O. Box 16, Filton, Bristol, BS34 7YB, England

CONTENTS

1. SCOPE 4

2. APPLICABLE DOCUMENTS 4

2.1 DOCUMENTS 4
2 2 DRAWINGS 4

3. TEST PLAN 4

3.1 MODEL PHILOSOPHY 4
3.2 TEST SPECIMEN 4
3 3 TEST SEQUENCE 4

4. TEST REQUIREMENT 5

4.1 PRELIMINARY CHARACTERISATION TESTS 5
4 1 1 Determine HDRM Latch Bearing Friction 5
4 1 2 Determine Hinge Friction Torque 5
4 1.3 Preliminary Electrical Tests 6
4 2 BASELINE FUNCTIONAL TEST 6
4 2 1 HDRM 6
4 2 2 Hinge Drive 6
4 3 DOOR OPERATIONS 7
4 4 VIBRATION TEST 8
4 4 1 Sine Survey 9
4 4 2 Random Vibration 9
4 5 POST-VIBRATION FUNCTION TEST 9
4 5 1 HDRM 9
4 5 2 Hinge Drive 9
4 5 3 Test Results 10
4 6 THERMAL VACUUM TEST 10
4 6 1 SSH Test Configuration 12
4 6 2 SSH Functional tests 12
4 7 STH LEVEL VIBRATION TEST 13
4 8 POST-VIBRATION FUNCTION TEST 13
4 8 1 HDRM 13
4 8 2 Hinge Drive 13

APPENDIX A DETAILED TEST INSTRUCTIONS 15

DISTRIBUTION LIST 25

CHANGE RECORD 25

1. SCOPE

This document details the test plan and requirement to verify the HIRDLS Sun Shield Assembly Flight Model at unit level.

2. APPLICABLE DOCUMENTS

2.1 Documents

a) Sun Shield Requirement Specification SP-HIR-50
b) STM, SSH and SVA Design Development and Test Plan TP-MMS-248
c) Manual for SSH & SVA Test equipment (EGSE) TC-MMS-400

2.2 Drawings

a) Sunshield / HDA Assembly - HRIL100
b) Vibration Fixture - TAA 2124.
c) Thermal Vacuum and Assembly Fixture - TAA2128

3. TEST PLAN

3.1 Model Philosophy

The SSH model philosophy is defined in the STH, SSH and SVA DD&T plan, AD2 1 (b). The FM will be subjected to the acceptance level tests described herein

3.2 Test Specimen

The test specimen is the FM unit SSH assembly - HRIL100

3.3 Test Sequence

The test sequence for the FM SSH assembly is as follows:-

- Preliminary characterisation tests
- Baseline functional test.
- Vibration test (at unit level)
- Post Vibration functional test
- Thermal vacuum test.
- Vibration test (at STH level).
- Post Vibration functional test

4. TEST REQUIREMENT

4.1 Preliminary Characterisation Tests

Set up SSH assembly (HRIL100) in assembly fixture (TAA2128). Clamp side cleats with door in the open position to ensure aperture plate is not distorted by seal loads.
Note, before clamping the HDA plate to fixture:-

- Release door by operating the HDRM manual override with torque wrench set at 1.8 Nm.
- Open door manually by back driving hinge motor gearhead 90°
- Torque tighten M4 fasteners.
- Close door manually.
- Relatch door, by operating HDRM manual override with torque wrench set at 1.8 Nm to offload torque on the latch open spring, pull spring outwards from HDRM to allow the mechanism to return to the locked position, under the control of the torque wrench.

4.1.1 Determine HDRM Latch Bearing Friction

- Disengage both latch torsion springs.
- Determine torque to rotate latch using torque clock.
- Determine torque with lockout hairspring in contact with micro-switch striker lever.
- Determine operating torque required to lock door and apply preload
- Refit torsion spring and verify latch can operate with 1 spring
- Determine spring torque in the following positions:-
  - Fully open
  - Fully closed

4.1.2 Determine Hinge Friction Torque

- Set up SSH Assembly fixture with hinge axis vertical
- Ensure motor drive shaft is disconnected
- Determine torque to rotate door away from latch, then back towards latch.
  Note: *This torque will include the friction torque of both hinges, the potentiometer and the grounding spring*
- Push door with Correx gauge to determine torque at hinge.
- Determine the detent torque of the motor gearhead
- Reconnect the motor gearhead drive to the hinge Measure the hinge torque with Correx gauge
- Determine hinge drive backlash
- Refit second torsion spring to HDRM
- Determine spring torsion in both positions -
  - Fully open
  - Fully closed.
- Verify latch preload. Determine deflection away from the door of the roller lever with a force of 30N applied at the roller. Measure deflection with dial indicator at this point Set shim at latch to provide this additional deflection of the roller lever in the locked position
- Determine force required at latch to compress door seal by applying dead loads at latch position on door until door contacts 'Vee' locator.

4.1.3 Preliminary Electrical Tests

- Verify motor resistance of each phase of the hinge stepper motor (prime and redundant): 115Ω ± 10% (x 2 for star)
- Determine potentiometer resistance
  - Door open position.
  - Door closed position.

Note: *Reset position of potentiometer if dead band is entered*

- Verify micro-switch closure status against position
- Verify resistance of HOP heaters 78Ω ± 10%
  - Prime resistance
  - Redundant resistance
- Verify resistance of thermistors at 20°C ≅ 2 8KΩ and drive is positive.
- Determine resistance of grounding between
  - Door and aperture panel grounding terminals
  - Hinge clevis plate to aperture panel terminal
  - Latch plate to aperture panel terminal
- Verify Sun Sensor (3 off) circuit

4.2 Baseline Functional Test

4.2.1 HDRM

- Set lockout spring back with MGSE to prevent HDRM locking in the open position
- Set up SSH assembly with the door latched
- Switch on HOP prime heater circuit (28V) (Connector J211P pin 1 & 11) until latch lever is in the fully open position and micro-switch operates, switch off power after 15 sec and allow latch lever to retract to the fully closed position.
  - Monitor and record the following parameters to characterise HDRM function
  - Deployment and Retract time.
  - Micro-switch operation at limits.
  - Thermistor output temperature / time
  - Repeat above operation for redundant circuit.

CAUTION: *The redundant circuit (Conn J211P pin 2 & 6) is **NOT** protected from overheating and must be switched off immediately after micro-switch operates.*

Repeat the above sequence to a total of 5 operations

4.2.2 Hinge Drive

- Set up SSH Assembly with hinge axis vertical
- Set HDRM with latch locked open
- Manually rotate door 20° out of latch.
- Connect up EGSE as shown in operating manual TC-MMS-400 and set up Labview screen to the following settings·
  - Voltage - 28V
  - Current limit - 0.5A
  - Stepper motor rate - 20Hz
  - Prime motor winding

- Command door to rotate 10° (100 steps) at nominal 28V on prime winding of hinge drive.
  - Verify direction of operation.
  - Confirm angular displacement of door.
- Repeat operation for redundant winding
- Determine torque to overcome powered motor detent.
- On Labview screen select 'calibration' . This command records potentiometer voltage at each step position over full operating range of door Plot results to characterise stepper motor count to potentiometer output voltage errors.
- Determine hinge drive torque margin·

  Connect 3 in-line resistors in stepper motor harness to limit current
  Increase in-line resistor values until hinge drive motor is close to stall
  Calculate torque margin.

$$\frac{\text{Motor Resistance} + (\text{2x In-line resistance})}{\text{Motor Resistance}}$$

4.3 Door Operations

- Command door to fully closed position
- Verify operation of fully closed micro-switch
- Command door to fully open position
- Verify operation of fully open micro-switch

Repeat the above sequence to a total of 10 operations

4.4 Vibration Test

The FM unit shall undergo a random vibration workmanship test. The full test sequence for each axis shall be as follows.-

Jig survey	(See Section 4.3 1)
Sine survey	(See Section 4.3 1)
Random	(See Section 4 3.2)
Sine survey	(See Section 4 3 1)

The purpose of the sine surveys is to verify the structural integrity of the equipment after the workmanship test and to confirm that the unit meets it's stiffness requirements.

The vibration axes and accelerometer positions are defined in Figure 4 3-1 The SSH will be mounted to the vibration fixture TAA2128 in accordance with the drawing requirements Note, the sequence for clamping the HDA plate to the vibration fixture is as follows -

- Release door by operating HDRM manual override with torque wrench set at 1 8 Nm
- Open door manually by back-driving hinge motor gearhead 90°.
- Shim gaps between unit cleats and vibration fixture
- Torque fasteners as follows:-
  M4 Stainless steel screws (UNBRAKO) - 4,0 Nm
  M4 nuts onto Stainless steel threads - 2,4 Nm
- Fillet lock all fixings except on CFRP
- Close door manually
- Re-latch door, by operating HDRM manual override with torque wrench set at 1.8Nm to offload torque on the latch open spring, pull spring outwards from HDRM to allow the mechanism to return to the locked position, under the control of the torque wrench.

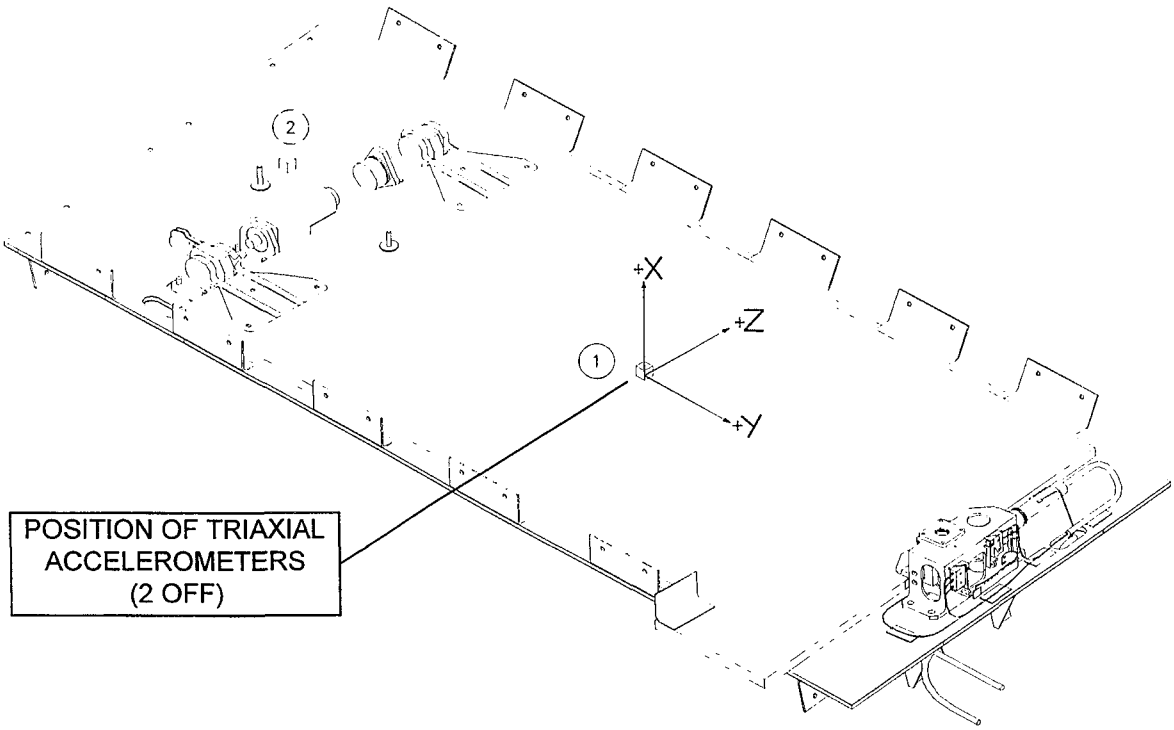

Figure 4.3-1 : SSH Axes for Vibration Test

4.4.1 Sine Survey

Jig and sine survey tests shall be carried out between 5 and 2000 Hz with a sweep rate of 2 octaves/minute at a level of 0 2g

4.4.2 Random Vibration

The workmanship test level is given in Table 4.3-2 FM tests shall have a duration of 60 seconds per axis

Axis	Frequency (Hz)	Level (g^2/Hz)	Total Level (grms)
ALL	20	0 01	)
	20-160	+3 dB/oct	)
	160-250	0.08	) 7.4
	250-2000	- 3 dB/oct	)
	2000	0 01	)

Table 4.3-2 : Random Vibration Workmanship Test

4.5 Post-vibration function test

4.5.1 HDRM

- Set lockout spring back with MGSE to prevent HDRM locking in the open position
- Set up SSH assembly with the door latched.
- Switch on HOP prime heater circuit (28V) (Connector J211P pin 1 & 11) until latch lever is in the fully open position and micro-switch operates, switch off power after 15 sec and allow latch lever to retract to the fully closed position
  - Monitor and record the following functional parameters:
  - Micro-switch operation at limits
  - Verify operation of redundant circuit for 30 sec.

CAUTION: *The redundant circuit (Conn J211P pin 2 & 6) is* ***NOT*** *protected from over-heating and must be switched off immediately after micro-switch operates*

Repeat the above sequence to a total of 5 operations

4.5.2 Hinge Drive

- Set up SSH Assembly with hinge axis vertical
- Set HDRM with latch locked open
- Command door to fully open position
- Verify operation of fully open micro-switch
- Command door to fully closed position
- Verify operation of fully closed micro-switch
- Command door to fully open position

- Verify operation of fully open micro-switch
- Command door to rotate 0 1° towards the closed position, record potentiometer voltage. Repeat sequence until door is closed. Plot results to characterise stepper motor count to potentiometer output voltage

Repeat the above sequence to a total of 10 operations

- On Labview screen select 'calibration' . This command records potentiometer voltage at each step position over full operating range of door . Plot results to characterise stepper motor count to potentiometer output voltage errors.
- Determine hinge drive torque margin:
  Connect 3 in-line resistors in stepper motor harness to limit current
  Increase in-line resistor values until hinge drive motor is close to stall.
  Calculate torque margin:

$$\frac{\text{Motor Resistance} + (\text{2x In-line resistance})}{\text{Motor Resistance}}$$

4.5.3 Test Results

Compare these results with the baseline functional test results (Para 4.2)

4.6 Thermal Vacuum Test

The FM unit shall be tested in vacuum ($<10^{-5}$ Torr) at its upper and lower acceptance temperature limits whist operational and when driven by representative electronics. The thermal vacuum test profile is shown in Figure 4.5-1. The SSH shall be mounted so that the hinge axis is vertical The test shall be controlled by the reference thermocouple which shall be attached to the aperture plate

The time duration spent at each upper or lower limit shall be a minimum of 4 hours (see Figure 4 5-1) The rate of change between limits shall not exceed 5°C/min.

Acceptance temperature limits are given in Table 4.5-1.

Operating	
Min	**Max**
-25	25

Table 4.5-1 : Acceptance Temperature Limits (°C)

The time duration (minimum) spent at each limit and the maximum rate of change between limits, shall be 4 hours and 5°C/min respectively (see Figure 4.5-1)
The unit will be tested through 4 complete thermal cycles.

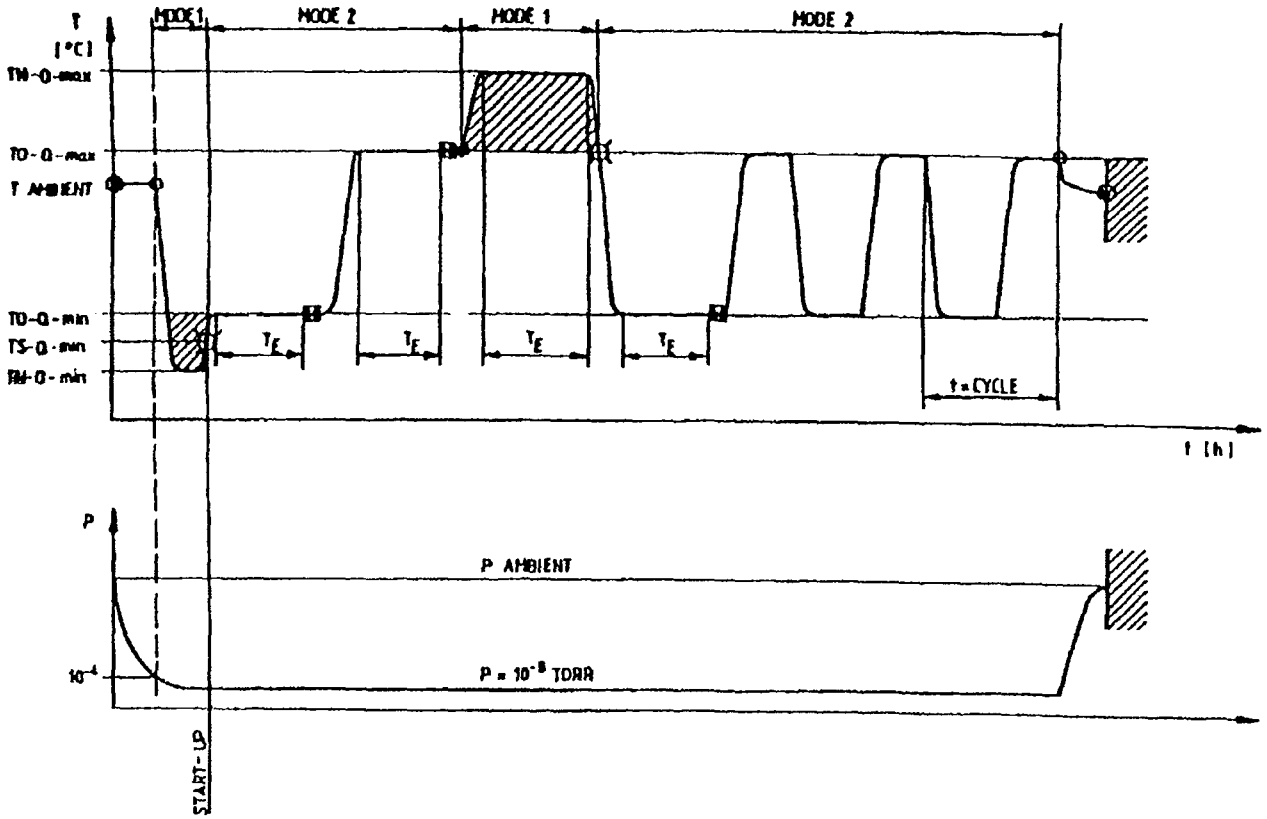

Figure 4.5-1 : SSH Thermal Vacuum Test Profile (GENERIC FOR QUAL + ACCEPTANCE)

4.6.1 SSH Test Configuration

Set up SSH assembly (HR1L100) in assembly fixture (TAA2128). All side cleat fasteners to be replaced with M2 nuts and bolts, with the exception of a single central fastener on 90 degree cleat side.

- Torque tighten this M4 bolt to 2Nm.
- All M2 fasteners to be clamped finger tight on this side
- Remove packing from between cleats and fixture, fit M2 fasteners finger tight.
- Set lockout spring back with MGSE to prevent HDRM locking in the open position.
- Bolt complete assembly to the vacuum chamber transom plate, with the door hinge axis vertical.
- Connect harness.
- Verify chamber clearance by operating door.

4.6.2 SSH Functional tests

The HDRM and Door Hinge Drive tests detailed below are to be performed prior to closing chamber:-

i after cold temperature soak at -25°C
ii after raising temperature to 25°C
iii at ambient temperature after completion of 8 thermal cycles.

This represents a total of 20 operations (4 HDRM and 16 Door Drive).

4.6.2.1 HDRM

- Switch on HOP prime heater circuit (28V) (Connector J211P pin 1 & 11) until latch lever is in the fully open position and micro-switch operates, switch off power after 15 sec and allow latch lever to retract to the fully closed position.
- Repeat HOP operation at -25°C and 25°C.
- Repeat HOP operation at ambient temperature in vacuum.
- Repeat HOP operation at ambient temperature and pressure.
- Monitor and record the following functional parameters .
  - Micro-switch operation at limits.
  - HOP actuator temperature as micro-switches operate(both directions)

- Verify operation of redundant circuit for 30 sec

  CAUTION: *The redundant circuit (Conn J211P pin 2 & 6) is* ***NOT*** *protected from over-heating and must be switched off immediately after micro-switch operates.*

4.6.2.2 Hinge Drive

Prior to pump down,

- Command door to fully open position
- Verify operation of door fully open micro-switch
- Command door to fully closed position
- Verify operation of door fully closed micro-switch
- Record potentiometer readings at both the fully open and closed door positions.

- On Labview screen select 'calibration' This command records potentiometer voltage at each step position over full operating range of door Plot results to characterise stepper motor count to potentiometer output voltage errors
- Determine hinge drive torque margin.
  Connect 3 in-line resistors in stepper motor harness to limit current
  Increase in-line resistor values until hinge drive motor is close to stall
  Calculate torque margin:

$$\frac{\text{Motor Resistance} + (\text{2x In-line resistance})}{\text{Motor Resistance}}$$

- Repeat opening / closing to a total of 4 operations

Repeat the above sequence;
- at -25°C and 25°C
- at ambient temperature

4.6.2.3 Test results

- Open chamber to inspect SSH assembly
- Compare these results with the baseline functional test results (Para 4 2)

4.7 STH Level Vibration Test

The FM unit shall be installed on the HIRDLS structure during STH level vibration testing (refer to Doc. No TP-MMS-448 for details of this testing)

4.8 Post-vibration function test

4.8.1 HDRM

- Set lockout spring back with MGSE to prevent HDRM locking in the open position.
- Set up SSH assembly with the door latched
- Switch on HOP prime heater circuit (28V) (Connector J211P pin 1 & 11) until latch lever is in the fully open position and micro-switch operates, switch off power after 15 sec and allow latch lever to retract to the fully closed position
  - Monitor and record the following functional parameters
  - Micro-switch operation at limits.
  - Verify operation of redundant circuit for 30 sec

CAUTION: *The redundant circuit (Conn J211P pin 2 & 6) is* ***NOT*** *protected from over-heating and must be switched off immediately after micro-switch operates*

Repeat the above sequence to a total of 5 operations

4.8.2 Hinge Drive

- Set up SSH Assembly with hinge axis vertical.
- Set HDRM with latch locked open
- Command door to fully open position
- Verify operation of fully open micro-switch

- Command door to fully closed position
- Verify operation of fully closed micro-switch
- Command door to fully open position
- Verify operation of fully open micro-switch
- Command door to rotate 0.1° towards the closed position, record potentiometer voltage Repeat sequence until door is closed. Plot results to characterise stepper motor count to potentiometer output voltage.

Repeat the above sequence to a total of 10 operations

- On Labview screen select 'calibration' This command records potentiometer voltage at each step position over full operating range of door . Plot results to characterise stepper motor count to potentiometer output voltage errors
- Determine hinge drive torque margin

  Connect 3 in-line resistors in stepper motor harness to limit current

  Increase in-line resistor values until hinge drive motor is close to stall.

  Calculate torque margin:

$$\frac{\text{Motor Resistance} + (\text{2x In-line resistance})}{\text{Motor Resistance}}$$

APPENDIX A DETAILED TEST INSTRUCTIONS

Para	Activity	Results	Comments
4.1	**Premilinary Tests** Set up SSH in fixture Release door by operating the HDRM manual override with torque wrench set at 1.8Nm Open door manually by backdriving hinge motor gearhead through 90° Torque tighten M4 fasteners and close the door manually Re-latch door by operating HDRM manual override with torque wrench set at 1.8 Nm to offload torque on the latch open spring. Pull spring outwards from HDRM to allow the mechanism to return to the locked position under the control of the torque wrench		
4.1.1	**Determine HDRM Latch Bearing Friction** Disengage both latch torsion springs **Determine torque to rotate latch using torque clock** **Determine torque with lock-out hairspring in contact with micro-switch striker lever** **Determine operating torque required to lock door and apply preload** **Refit torsion spring and verify latch can operate with one spring** Determine spring torque in the fully open position Determine spring torque in the fully closed position		
4.1.2	**Determine Hinge Friction Torque** Set up SSH fixture with hinge axis vertical Ensure motor drive shaft is disconnected **Determine torque to rotate door away from latch and then back towards latch** **Push door with Correx gauge to determine torque at hinge** Determine the detent torque of the motor gearhead **Reconnect the motor gearhead drive to the hinge and measure the hinge torque with the Correx gauge**		

Para	Activity	Results	Comments
4.1.2	**Cont.** **Determine hinge drive backlash** Refit second torsion spring to HDRM **Determine spring torsion in fully open position** **Determine spring torsion in full closed position** **Verify latch preload** **Apply a force of 30N at the roller lever and determine it's deflection away from the door** Set shim at latch **Determine force required at latch to compress door seal**		
4.1.3	**Preliminary Electrical Tests** **Verify motor resistance of each phase of the hinge stepper motor (prime and redundant)** **Determine potentiometer resistance in door open position** **Determine potentiometer resistance in door closed position** **Verify micro-switch closure status against position** **Verify prime resistance of HOP heater** **Verify redundant resistance of HOP heater** **Verify resistance of thermistors at 20°C** **Determine resistance of grounding between :-** Door and aperture plate grounding terminals Hinge clevis plate to aperture plate panel terminal Latch plate to aperture plate grounding terminal **Verify Sun Sensor circuits**		
4.2 4.2.1	**Baseline Functional Test** **HDRM** Set lock-out spring back with MGSE to prevent HDRM locking in open position Set up SSH with the door latched		

Para	Activity	Results	Comments
4.2.1	**Cont.** Switch on HOP prime heater circuit (connector J211P pin 1 & 11) until latch lever is in the fully open position and micro-switch operates. Switch off power after 15 secs and allow latch lever to retract to the fully closed position **Monitor the following parameters to characterise HDRM function :-** **- Deployment and Retract time** **- Micro-switch operation at limits** **- Thermistor output temperature / time** Repeat above operations for redundant circuit (Conn J211P pin 2 & 6) **Record :-** **- Deployment and Retract time** **- Micro-switch operation at limits** **- Thermistor output temperature / time**		
4.2.2	**Hinge Drive** Set up SSH with hinge axis vertical Set HDRM with latch locked open Manually rotate door 20° out of latch Using Labview set voltage 28V, current limit 0.5A, stepper motor rate 20 Hz Command door to rotate 10° (100 steps) at nominal 28V on prime winding of hinge drive and; **- verify direction of operation** **- confirm angular displacement of door** Repeat operation for redundant winding and; **- verify direction of operation** **- confirm angular displacement of door** **Determine torque to overcome powered motor detent** On Labview screen select calibration **Plot stepper motor count to potentiometer output voltage errors** Connect 3 in-line resistors in stepper motor harness		

Para	Activity	Results	Comments
4.2.2	**Cont.** Increase in-line resistor values until hinge drive motor is close to stall **Calculate torque margin**		
4.2.3	**Door Operations** Command door to fully closed position **Verify operation of fully closed micro-switch** Command door to fully open position **Verify operation of fully open micro-switch**		
4.4	**Post Vibration Function Test**		
4.4.1	**HDRM** Set lock-out spring back with MGSE to prevent HDRM locking in open position Set up SSH with the door latched Switch on HOP prime heater circuit (connector J211P pin 1 & 11) until latch lever is in the fully open position and micro-switch operates. Switch off power after 15 secs and allow latch lever to retract to the fully closed position **Monitor and record micro-switch operation at limits** **Verify operation of redundant circuit for 30 secs**		
4.4.2	**Hinge Drive** Set up SSH with hinge axis vertical Set HDRM with latch locked open Command door to fully open position **Verify operation of fully open micro-switch** Command door to fully closed position **Verify operation of fully closed micro-switch** Command door to fully open position **Verify operation of fully open micro-switch** On Labview screen select calibration		

Para	Activity	Results	Comments
4.4.2	**Cont.** **Plot stepper motor count to potentiometer output voltage errors** Connect 3 in-line resistors in stepper motor harness Increase in-line resistor values until hinge drive motor is close to stall **Calculate torque margin**		
4.5	**Thermal Vacuum Test**		
4.5.2.1	**HDRM**		
(a)	**Prior to pump down** Switch on HOP prime heater circuit (connector J211P pin 1 & 11) until latch lever is in the fully open position and micro-switch operates. Switch off power after 15 secs and allow latch lever to retract to the fully closed position **Monitor :-** **Micro-switch operation at limits** **HOP actuator temperature as micro-switches operate**		
(b)	**After cold temperature soak at -25°C** Switch on HOP prime heater circuit (connector J211P pin 1 & 11) until latch lever is in the fully open position and micro-switch operates. Switch off power after 15 secs and allow latch lever to retract to the fully closed position **Monitor :-** **Micro-switch operation at limits** **HOP actuator temperature as micro-switches operate**		
(c)	**After raising temperature to 25°C** Switch on HOP prime heater circuit (connector J211P pin 1 & 11) until latch lever is in the fully open position and micro-switch operates. Switch off power after 15 secs and allow latch lever to retract to the fully closed position **Monitor :-** **Micro-switch operation at limits**		

Para	Activity	Results	Comments
4.5.2.1	**Cont.** **HOP actuator temperature as micro-switches operate**		
(d)	**At ambient after completion of 4 cycles** Switch on HOP prime heater circuit (connector J211P pin 1 & 11) until latch lever is in the fully open position and micro-switch operates. Switch off power after 15 secs and allow latch lever to retract to the fully closed position **Monitor :-** **Micro-switch operation at limits** **HOP actuator temperature as micro-switches operate** **Verify redundant circuit for 30 secs**		
4.5.2.2	<u>Hinge Drive</u>		
(a)	**Prior to pump down** Command door to fully open position **Verify operation of fully open micro-switch** Command door to fully closed position **Verify operation of fully closed micro-switch** **Record potentiometer readings at both the fully open and closed door positions** On Labview screen select calibration **Plot stepper motor count to potentiometer output voltage errors** Connect 3 in-line resistors in stepper motor harness Increase in-line resistor values until hinge drive motor is close to stall **Calculate torque margin**		
(b)	**After cold temperature soak at -25°C** Command door to fully open position **Verify operation of fully open micro-switch** Command door to fully closed position		

Para	Activity	Results	Comments
4.5.2.2	**Cont.** **Verify operation of fully closed micro-switch** **Record potentiometer readings at both the fully open and closed door positions** On Labview screen select calibration **Plot stepper motor count to potentiometer output voltage errors** Connect 3 in-line resistors in stepper motor harness Increase in-line resistor values until hinge drive motor is close to stall **Calculate torque margin**		
(c)	**After raising temperature to 25°C** Command door to fully open position **Verify operation of fully open micro-switch** Command door to fully closed position **Verify operation of fully closed micro-switch** **Record potentiometer readings at both the fully open and closed door positions** On Labview screen select calibration **Plot stepper motor count to potentiometer output voltage errors** Connect 3 in-line resistors in stepper motor harness Increase in-line resistor values until hinge drive motor is close to stall **Calculate torque margin**		
(d)	**At ambient after completion of 4 cycles** Command door to fully open position **Verify operation of fully open micro-switch** Command door to fully closed position **Verify operation of fully closed micro-switch** **Record potentiometer readings at both the fully open and closed door positions**		

Para	Activity	Results	Comments
4.5.2.2	**Cont.** On Labview screen select calibration **Plot stepper motor count to potentiometer output voltage errors** Connect 3 in-line resistors in stepper motor harness Increase in-line resistor values until hinge drive motor is close to stall **Calculate torque margin**		
4.7	**Post Vibration Function Test**		
4.7.1	**HDRM** Set lock-out spring back with MGSE to prevent HDRM locking in open position Set up SSH with the door latched Switch on HOP prime heater circuit (connector J211P pin 1 & 11) until latch lever is in the fully open position and micro-switch operates. Switch off power after 15 secs and allow latch lever to retract to the fully closed position **Monitor and record micro-switch operation at limits** **Verify operation of redundant circuit for 30 secs**		
4.7.2	**Hinge Drive** Set up SSH with hinge axis vertical Set HDRM with latch locked open Command door to fully open position **Verify operation of fully open micro-switch** Command door to fully closed position **Verify operation of fully closed micro-switch** Command door to fully open position **Verify operation of fully open micro-switch** On Labview screen select calibration **Plot stepper motor count to potentiometer output voltage errors** Connect 3 in-line resistors in stepper motor harness Increase in-line resistor values until hinge drive motor is close to stall		

Para	Activity	Results	Comments
	Calculate torque margin		

DISTRIBUTION LIST

INTERNAL	EXTERNAL
I K Stewart	N Morris (RAL)
R Coupe	
N Crossland	
S Yardley	

CHANGE RECORD

CHANGE NUMBER	CLASS	CHANGE DETAILS	ISSUE
3164-00305	-	FIRST ISSUE	1
3164- 00333	II	CHANGE IN THERMAL VACUUM TEST CYCLES	2

MATRA MARCONI SPACE

MEETING REPORT	Reference **HRDLS-PA-016**	
	Date **7-9-99**	Place **Portsmouth**

SUBJECT	TRR HIRDLS SSH FM

AGENDA

1. **Review of Test Procedure**
2. **MIP/KIP Status**
3. **Waiver/Deviation list and Status**
4. **Open NCR List and Comments**
5. **AOB**
6. **Conclusion**

PARTICIPANTS	AGREEMENT (signature)
Customer	
MMS A J Foot N Crossland R Coupe	 N Crossland
Copies to B Squires	

TEST READINESS REVIEW

Equipment Description

a	Equipment title :-	HIRDLS Sunshield/HDA Assembly (SSH)	
b	Serial No :-	FM001	
c	Drawing No :-	HR1LI00 Issue 4	
d	Test Procedure Nos.	TP-MMS-452 (3164-SA030-TPF)	Issue 1
e	Batch No	MFG0170717	N/A

1 Review of Test Procedure

The test procedure was reviewed no comments were raised as this procedure is almost a duplicate of the EM procedure with just the vibration levels changed.

2 MIP/KIP Status

The hardware was kipped prior to Vibration (HDRLS004 refers) no outstanding actions

3 Waiver/Deviation list and Status

None raised

4 Open NCR List and Comments

There is one open NCR raised to cover some anomalies noted during manufacture, all have been approved by the design authority The NCR will be closed once the assembly is complete

Action 1 AJF

There is also a Production Easement (PE) raised to cover the use of creep barrier without a C of C, the properties of the material have been verified prior to use. This PE will also be closed once the assembly is complete

Action 2 AJF

5 AOB

None

6 Conclusion

The unit is acceptable to proceed to vibration

PROJECT HIRLDS SSH	ACTION ITEMS LIST	SHEET 3 OF 3	DATE 7-9-99

DETAILS OF MEETING TRR HIRDLS SSH

ACTION No	ACTION	DUE DATE	COMPLETE DATE	ACTIONEE	NOTES
1	Close NCR			A J Foot	
2	Close Production Easement			A J Foot	

HIRDLS

TP-MMS-470
(3164-SS094-TPF)
Issue 1

HIGH RESOLUTION DYNAMICS LIMB SOUNDER

Originator: N Crossland (MMS) / G Toplis (RAL) Date: 1 December, 1999

Subject/Title: **FM Structure Assembly Bake-out Test Procedure**

Description/Summary/Contents:

The purpose of this document is to identify the procedures and requirements for carrying out the Bake-out test on the Flight Model of the Structure/Thermal Subsystem (STH together with SSH and SVA) 3164-SS001-02-F and Thermal Subsystem (MLI) 3164-TH001-02-F.

Keywords: FM, STH, Structure Assembly, Bake-out Test

Purpose of this Document: Test Procedure for the FM Structure bake-out tests

Reviewed/Approved by:			
Date (yy-mm-dd):	99-12-08		

Rutherford Appleton Laboratory
Chilton
Didcot
Oxfordshire
OX11 0QX
United Kingdom

Matra Marconi Space UK
Anchorage Road
Portsmouth
Hants PO3 5PU
United Kingdom

EOS

ORIGINAL WHEN RED

FM STRUCTURE ASSEMBLY BAKE-OUT TEST PROCEDURE

TP-MMS-470

Responsible Engineer: N Crossland Date: 7th Dec 1999

N Crossland

Quality Assurance: Date: 8-DEC-99.

A Foot

Project Manager: Date: 8 Dec 99

I K Stewart

© MATRA MARCONI SPACE UK LIMITED

THE COPYRIGHT IN THIS DOCUMENT IS THE PROPERTY OF MATRA MARCONI SPACE UK LIMITED This document is supplied by Matra Marconi Space UK Limited on the express terms that it is to be treated as confidential and that it may not be copied, used or disclosed to others for any purpose except as expressly authorised under the terms of Contract No N2A 3R 0386

Any person, other than the authorised holder, who finds or otherwise obtains possession of the document, should post it, together with his/her name and address, to the Registry, Matra Marconi Space UK Limited, Anchorage Road, Portsmouth, England, PO3 5PU Postage will be refunded

CONTENTS

1. SCOPE 4

1 1 GENERAL 4
1 2 EQUIPMENT TO BE TESTED 4
1 3 TEST OBJECTIVE 4

2. APPLICABLE DOCUMENTS 4

3. TEST CONDITIONS 5

3 1 PERSONNEL 5
3.1.1 Quality Control 5
3 1 2 Test Director 5
3 1 3 Test Controller 5
3 2 HAZARDS AND PRECAUTIONS 6
3 3 TEST EQUIPMENT 6

4. PRODUCT ASSURANCE PROVISIONS 7

4.1 AMBIENT TEST CONDITIONS 7
4 2 BAKE-OUT TEST CONDITIONS 7
4 3 ACCEPTANCE CRITERIA 7

5. TEST PREPARATION 7

5 1 INSPECTION 7
5 2 CLEANLINESS 7
5 3 HANDLING 8
5 4 SPECIMEN INSTRUMENTATION 8

6. DATA RECORDING AND ANALYSIS 8

6 1 TEMPERATURE SENSORS 8
6 2 TQCM 8

DISTRIBUTION LIST 9

CHANGE RECORD 9

1. SCOPE

1.1 General

The purpose of this document is to identify the procedures and requirements for carrying out the Bake-out test on the Flight Model of the Structure/Thermal Subsystem (STH together with SSH and SVA) 3164-SS001-02-F and Thermal Subsystem (MLI) 3164-TH001-02-F.

1.2 Equipment to be tested

The equipment to be tested is the Structure/Thermal Subsystem (STH together with SSH and SVA) 3164-SS001-02-F and Thermal Subsystem (MLI) 3164-TH001-02-F.

1.3 Test Objective

The objective of the bake-out test is to ensure that contaminants resident in the structure after manufacturing and assembly, have been reduced to minimal levels.
These tests are being conducted at RAL and under RAL direction.

2. APPLICABLE DOCUMENTS

The latest issues of the following documents were applicable at the date of issue of this document.

AD1	Structure/Thermal Subsystem Requirements Specification	SP-HIR-031
AD2	MMS Subsystems Cleanliness and Contamination Control Plan	PA-MMS-387
AD3	Product Assurance Plan (or RAL equivalent)	PLN/GP/50770
AD4	Standard Requirements for Work Environment Control at MMS Portsmouth (or RAL equivalent)	CDSP-DB010-STE
AD5	Manufacturing Standard for Handling and Cleaning of Thermal Control Surfaces	S-3-07-008

3. TEST CONDITIONS

3.1 Personnel

3.1.1 Quality Control

A QC Inspector(RAL) will be required to perform visual inspections, ensure correct documentation is used, and ensure that non-conformances are processed in accordance with the Product Assurance Plan (AD 3). He/she should also check that all test equipment provided by the test facility has relevant calibration certificates.

3.1.2 Test Director

The Test Director will be a specialist engineer with the following responsibilities:-

a) Liaise with the Test Facility personnel.

b) In conjunction with the Test Controller, supervise the installation and removal of the test specimen from the test chamber.

c) Supervision of the test programme in accordance with the procedures defined in this document.

d) Provision of a test report compiled from the test results.

3.1.3 Test Controller

Test Controllers will be required at the bake-out test facility. They shall be appointed by the Head of the Test facility and will be responsible for the following :-

a) Liaison with the Test Director.

b) Provision of all equipment required for the test.

c) Ensure that all test equipment provided by the test facility has relevant calibration certificates.

d) Ensure that all QA activities relevant to the tests are conducted and relevant documentation completed.

e) Allow the Test Director access to the test results.

f) Ensure that the test equipment delivers the test levels required to comply with the requirements and that adequate precautions are taken to prevent under or over testing.

g) The instrumentation of the test specimen in accordance with the relevant part of this document.

h) Provision of test results as required by the Test Director.

3.2 Hazards and Precautions

Testing of the equipment in accordance with the requirements of this procedure shall not result in any hazard to personnel or equipment, provided that the standard procedures applicable to the test item and operation of the test facilities are followed.

There are no electrical safety hazards associated with the test item.

For information, the adhesives and solvents that have been used in the construction of the test item are:-

Solvents:- Acetone, Triklone 'P'

Adhesives:- Scotchweld EC2216B/A Epoxy
Hysol EA9395 Film adhesive
Redux 312UL Film adhesive
RTV 566 Silicone adhesive and SS4155 Primer
FM410 Foam adhesive
Stycast 1090SI/CAT9 Epoxy resin
Eccobond 56C/CAT9 Epoxy resin
Versamid 140 Polyamide resin
Epikote 828 liquid epoxy resin

Sub-Assemblies are baked out after manufacture to drive off any residuals from construction adhesives and solvents etc. However, RTV 566, SS4155 Primer and Acetone may still be present after structure assembly build, albeit in small quantities.

In the event of failure of any utility or equipment used to control the environmental conditions, the test may be stopped at the discretion of the Test Director. If necessary, the test item shall then be removed from the test facility until the latter has been rectified.

3.3 Test Equipment

All test equipment specified, other than specially designed and built equipment used to verify and define specific parameters shall be calibrated to traceable standards and shall be within the calibration period.

4. PRODUCT ASSURANCE PROVISIONS

4.1 Ambient Test Conditions

Unless otherwise specified in this document, all measurements and tests shall be performed within the following ambient conditions :-

Temperature	21 ± 5°C
Relative humidity	35% to 52%
Pressure	98 to 105 KPa

4.2 Bake-out Test Conditions

The structure shall be baked out in vacuum conditions (< 10^{-5} mBar) at a temperature of 60°C ± 5°C for a minimum period of 24 hours. The temperature rate of change shall not be greater than 6°C /min

4.3 Acceptance Criteria

The test item shall be deemed to have passed the test when the structure has undergone an elevated temperature of +60°C ± 5°C for a minimum period of 24 hours whilst in vacuum conditions.
The change in frequency reading from the TQCM (TQCM temperature to be -20 °C) should be less than 64 Hz/hour. This is applicable during the last two hours of the hot soak.

5. TEST PREPARATION

5.1 Inspection

The Structure Assembly will be visually inspected by Quality Control immediately on delivery to the test facility to ensure it has not been damaged in transit from its last inspection. It will also be inspected when installed in it's test configuration just prior to the commencement of testing. The article will be accompanied by its manufacturing data package which will contain a Manufacture History Record (MHR). This record will be checked for completion of all operations prior to the test being undertaken.

5.2 Cleanliness

The environment surrounding the test specimen shall be maintained at a level equivalent to that defined by MMS Work Environment Control Standard Class 3 (AD 4) at all times. Equivalent levels are defined by FED STD 209B Class 100000 or BS 5295 Class 3. Where test areas do not meet these requirements, the test specimen shall be protected by being enclosed in a suitable plastic 'tent'.

5.3 Handling

The Structure Assembly shall at all times be handled carefully in accordance with specification S-3-7-008 (AD 5) and the Handling Procedure (AD 6). At no time shall undue force be applied to attach it or remove it from the test configuration

5.4 Specimen Instrumentation

Structure instrumentation will require the use of 6 PRT channels. The PRT positions shall be as agreed between the Test Director and test controller of the test facility prior to commencement of test, but should allow the structure to attain the required temperature evenly over the entire surface. (i.e. no hot or cold spots).

The agreed sensor and TQCM positions shall be recorded in the test facility job book.

6. DATA RECORDING AND ANALYSIS

6.1 Temperature Sensors

All temperature sensor outputs shall be recorded during the test, at the discretion of the Test Director and in agreement with the test facility.

All sensor records shall be retained in the test facility job book.

6.2 TQCM

All data from the TQCM shall be recorded manually (hourly) and by computer (every minute).

DISTRIBUTION LIST

INTERNAL	EXTERNAL
I K Stewart	N Morris (RAL)
T Forward	G M Toplis (RAL)
A Robinson	
N Crossland	

CHANGE RECORD

CHANGE NUMBER	CLASS	CHANGE DETAILS	ISSUE
3164- 00348	-	First Issue	1

SECTION 3

Test Reports

HIRDLS

TR-MMS-458
(3164-SA031-TRF)
Issue 2

HIGH RESOLUTION DYNAMICS LIMB SOUNDER

Originator: R Coupe Date 11 January, 2000

Subject/Title **SSH FM Thermal Vacuum and Functional Test Report**

Description/Summary/Contents.

The following HIRDLS Sunshield Subsystem Flight Model (SSH FM), Serial Number FM001, tests have been performed :

Thermal Vacuum testing at RAL
Functional and Vibration testing at MMS-P

The objective of the test programme was to subject the SSH to workmanship level tests as defined in the Sunshield Subsystem Specification and Test Procedure, and to correlate the results with the EM test performance

Keywords FM, SSH Assembly, Thermal Vacuum Test, Functional Test

Purpose of this Document. Test Report for SSH Assembly WorkmanshipTests

Reviewed/Approved by:			
Date (yy-mm-dd):	00 – 01 – 11		

Rutherford Appleton Laboratory
Chilton
Didcot
Oxfordshire
OX11 0QX
United Kingdom

Matra Marconi Space UK
Anchorage Road
Portsmouth
Hants PO3 5PU
United Kingdom

EOS

SSH FM THERMAL VACUUM AND FUNCTIONAL TEST REPORT

TR-MMS-458

Prepared by ..... *Date* 11-1-2000

R T.S COUPE

Checked by N Greenstand ..... *Date* 11th Jan 2000

Authorised by. ..... *Date.* 11/Jan/00

I K STEWART

© MATRA MARCONI SPACE UK Limited 1999

Matra Marconi Space UK Limited owns the copyright of this document which is supplied in confidence and which shall not be used for any purpose other than that for which it is supplied and shall not in whole or in part be reproduced, copied, or communicated to any person without written permission from the owner

MATRA MARCONI SPACE UK Limited
P.O. Box 16, Filton, Bristol, BS34 7YB, England

CONTENTS

1. INTRODUCTION 4

2. EXECUTIVE SUMMARY 5

2 1 SSH DOOR OPENING OPERATION TORQUE MARGINS 5
2 2 SSH LATCH OPENING OPERATION TORQUE MARGINS 5

3. APPLICABLE DOCUMENTS 6

4. TEST SPECIMEN 6

5. TEST SEQUENCE 6

5 1 PRELIMINARY CHARACTERISATION TEST RESULTS 6
5 1 1 HDRM Latch Operating Torques 6
5 1 2 Door Hinge Friction Torque 7
5 1 3 Electrical Tests 7
5 1 4 Grounding 7
5 2 BASELINE FUNCTION TEST 7
5 2 1 HDRM 7
5 2 2 Hinge Drive 7
5 3 SSH VIBRATION TEST (6-8 SEPTEMBER 1999) 8
5 4 POST VIBRATION FUNCTION TEST 9
5 4 1 HDRM 9
5 4 2 Hinge Drive 9
5 4 3 Test Results Summary 9
5 5 THERMAL VACUUM TEST (27 SEPTEMBER- 2 OCTOBER 1999) 9
5 5 1 HDRM 9
5 5 2 Hinge Drive Operations at 28V 10
5 6 VIBRATION TEST (SSH FITTED TO STH STRUCTURE, OCTOBER 1999) 11
5 7 POST VIBRATION FUNCTION TEST 11
5 7 1 HDRM 11
5 7 2 Hinge Drive 11
5 7 3 Test Results 11

APPENDICES

1. INTRODUCTION

The HIRDLS Sunshield Subsystem (SSH) Flight Model (FM), Serial Number FM001, has been subjected to Workmanship tests. Thermal Vacuum testing was carried out at RAL, Vibration and functional testing at MMS Portsmouth

The objective of the test programme was to subject the SSH to :-
Workmanship level tests defined in the Sunshield Subsystem Specification (AD1) and Test Procedure (AD3), and to correlate the results with the EM test performance.

This report summarises the test results and, where applicable, deviations from the procedure

2. EXECUTIVE SUMMARY

The test results confirm the HIRDLS SSH FM has successfully survived the Workmanship test programme without any significant change in operating performance The major performance parameters are summarised below

2.1 SSH Door Opening Operation Torque Margins

Measured

Hinge bearings and potentiometer	-	0 09 Nm
Anti-backlash torsion spring (max. Torque)	-	0.70 Nm.
Minimum overall torque margin	-	**2.8**

(Torque margin determined by reducing motor current with resistors in series with motor windings)

Required (GSFC 424-11-13-01 para 3.4.5.3)

Minimum test verified torque ratio - 2.25
This is the appropriate margin as 88% of resistive torque is the spring load.

2.2 SSH Latch Opening Operation Torque Margins

Measured

Maximum latch operating torque	-	0 4 Nm.
Maximum torsion spring torque	-	1.4 Nm.
Minimum HOP actuator output torque	-	4.0 Nm.
Minimum overall torque margin	-	**2.86**

Required (GSFC 424-11-13-01 para 3.4.5.3)

Minimum test verified torque ratio is - 2.25
This is the appropriate margin as 78% of resistive torque is the spring load.

Note that the HOP Actuator minimum output torque is based on the lowest force output at the start of operation when the torsion spring torque is at a minimum of 1 Nm The force increases towards the end of the stroke. Note also HOP actuator nominal output force is a 1/3 of maximum

3. APPLICABLE DOCUMENTS

AD 1	SP-HIR-50 Issue D	Sunshield Subsystem Specification
AD 2	HRIL100 Issue 4	Sunshield / HDA Assembly BOM
AD 3	TP-MMS-452 Issue 2	Sunshield Subsystem Test Procedure
AD 4	TC-MMS-400 Issue 1	Manual for SSH and SVA Test Equipment
AD 5	TR-MMS-459 Issue 1	FM SSH Vibration Test Report
AD 6	AIV-99-092-STC	HIRDLS SSH Thermal Vacuum Test Report
AD 7	TR-MMS-461 Issue 1	FM STH Vibration Test Report

4. TEST SPECIMEN

The test item was the SSH Flight Model, Serial No. FM001 as defined in AD 2.

5. TEST SEQUENCE

5.1 Preliminary Characterisation Test Results

5.1.1 HDRM Latch Operating Torques

Resistive torque on latch compress seal	0.25 Nm
Resistive torque on fully lock door	0.3 Nm
Latch torsion spring, Fully open	0.7 Nm
Latch torsion spring, Fully closed	0.5 Nm
Latch operates acceptably with 1 torsion spring	

- HDRM Operating torque

Open position	1.4 Nm
Closed position	1.0 Nm

- Deflection due to latch preload of 30N (HDRM position shimmed to provide this preload) — 0 004"
- Force to compress seal at latch — 20 N

5.1.2 Door Hinge Friction Torque

- Resistive torque of both hinges, and potentiometer 0 09 Nm
- Detent torque of motor gearhead 0 16 Nm
- Drive anti-backlash torsion spring 0.47 Nm (Max)

5.1.3 Electrical Tests

Refer to Appendix 1 for results of SSH Pin Survey.

5.1.4 Grounding

Grounding resistance measurements between:-

- Door and aperture plate grounding terminal 0.5Ω
- Hinge clevis plates to aperture plate grounding terminal 0.4 & 19Ω
- Latch plate to aperture plate grounding terminal 0.5Ω

5.2 Baseline Function Test

5.2.1 HDRM

The HDRM HWA was operated Deployment / retract times, microswitch operations and thermistor temperatures were recorded. Some fundamental operating parameters are summarised below.

- HWA starts to open latch after 2 min power up, when temperature of HWA housing reaches 68°C
- HWA fully open latch after 3 min power up, when temperature of HWA housing reaches 95°C

It can be concluded that the HDRM operates within specification.

5.2.2 Hinge Drive

- Brake torque required to overcome powered motor detent 2 92 Nm
- Hinge potentiometer resistive torque 0 09 Nm

Torque margin = $\frac{2.92}{.09}$ => 5

Operation of door under 1g (hinge axis centreline horizontal) is satisfactory.

Stepper motor count / potentiometer output voltage results were plotted to calibrate the potentiometer errors (using data regression) The results are presented in Appendix 2.

Note that from the latched position, a step count of approximately 20 (≡ 2°) is required for the door to clear the latch lever arm roller.

5.2.2.1 Torque Margin

3 variable resistors were connected in series with the motor windings to reduce the available current to the windings.

The door was operated initially with the resistors set to 90 Ω The resistance was then increased in 5 Ω steps until the motor stalled. A motor stepping rate of 20 Hz was used throughout.

The door was found to be fully operational with an additional resistance of 100 Ω on both windings (105Ω causes motor to stall just before door contacts the door fully open microswitch)

The line to line motor winding resistance was measured at 111 Ω

Hence, based on the resistance change, it is possible to calculate the torque margin as follows -

Nominal winding resistance terminal to terminal = 111Ω

Resistance with additional resistors (2 x 100Ω) = 311Ω

Torque ∝ current ∝ resistance

Therefore, **Torque margin as measured = 311/111 = 2.8**

5.3 SSH Vibration Test (6-8 September 1999)

For full details of stand-alone SSH FM vibration testing refer to AD 5.

5.4 Post Vibration Function Test

5.4.1 HDRM

HDRM operated satisfactorily

5.4.2 Hinge Drive

Hinge drive and microswitches all operated satisfactorily.

The motor step count / potentiometer output voltage was calibrated. The test results are detailed in Appendix 2.

5.4.3 Test Results Summary

The HDRM and hinge drive test results compare favourably with baseline test and show no significant change in operating characteristics.

5.5 Thermal Vacuum Test (27 September- 2 October 1999)

The EM unit has been tested in vacuum ($<10^{-5}$ torr) at its upper and lower workmanship temperature limits and operated by representative electronics (EGSE Ref. AD4).

The SSH was mounted in the test chamber with the hinge axis vertical and functional tests were performed at the following stages :-

- Prior to closing chamber (to verify operating clearances and harness)
- at -25°C
- at +25°C
- at ambient temperature (After 4 thermal cycles)

Refer to RAL test chamber report (AD6, see Appendix 3) for thermal vacuum temperature cycling details.

5.5.1 HDRM

The HDRM was only fully operated at -25°C to demonstrate full operation of its retention latch and microswitch.

Operation of the actuator's heaters were performed after the hot cycle and at the end of the 4 thermal cycles.

5.5.2 Hinge Drive Operations at 28V

Test Results

@ -25°C	Potentiometer Voltage					
	Initial Test	**90Ω**	**95Ω**	**100Ω**	**105Ω**	**Status Switch**
Door closed (initial)	3 854					≤
Door open (Prime winding)	7 923	7 902		7.900	***7.198***	≤
Door closed (Prime winding	3 857	3.864		3 866	3.866	≤
Door open (Redundant)	7.926	7 900		7.893	***6.824***	≤
Door closed (Redundant)	3.860	3 865		3 865	3 866	≤

@ 25°C	Potentiometer Voltage					
	Initial Test	**90Ω**	**95Ω**	**100Ω**	**105Ω**	**110Ω**
Door closed (initial)	3 863					
Door open (Prime winding)	7 922	7.899	7 897	7 896	7 889	***7.594***
Door closed (Prime winding	3 860	3 863	3 864	3 864	3 865	***3.865***
Door open (Redundant)	7 914	7 896	7 897	7 896	7.881	***7.147***
Door closed (Redundant)	3 860	3 864	3.865	3.865	3.881	***3.866***

@ 25°C	Potentiometer Voltage					
Post 4 Thermal cycles	**Initial Test**	**90Ω**	**95Ω**	**100Ω**	**105Ω**	**Status Switch**
Door closed (initial)	3 861					≤
Door open (Prime winding)	7 914	7.898		7.897	7.987	≤
Door closed (Prime winding	3 861	3.864		3.865	3.865	≤
Door open (Redundant)	7.914	7.898		7.987	7.987	≤
Door closed (Redundant)	3.861	3.864		3 865	3.860	≤

In the above tables the high-lighted figures are where drive motor stalled before making the open or closed status switch. Status switches operated satisfactorily throughout

All AD590 thermistors operated satisfactorily

Potentiometer voltage / step count calibration tests
Potentiometer ouput voltage readings were logged at each motor step (0 1°door rotation) for opening and closing the door. Tests were performed at temperature extremes Refer to Appendix 2 for details

The SSH was inspected and no obvious degradation or damage was noted All operations were nominal at temperature extremes and after thermal cycling.

5.6 Vibration Test (SSH fitted to STH Structure, October 1999)

For full details of vibration testing at STH level refer to AD 7.

5.7 Post Vibration Function Test

5.7.1 HDRM

HDRM operated satisfactorily and the test results compare favourably with baseline tests and show no significant changes in operating characteristics

5.7.2 Hinge Drive

Hinge drive and microswitch all operated satisfactorily.

The hinge drive results show that the torque margin has reduced to **2.08.** This reduction is due to the drive having to overcome the additional torque induced by the gravity vector of the STH configuration, (i e. this is purely a ground test condition)

The potentiometer calibration test could not be performed as the 30°inclination of the hinge axis caused the drive to mis-step

5.7.3 Test Results

Post vibration Test SSH fitted to STH	Potentiometer Voltage					
Ambient conditions	**Initial Test**	**60Ω**	**65Ω**	**70Ω**		**Status Switch**
Door closed (initial)	3 849	≤				≤
Door open (Prime winding)	7 930	≤	≤	X		≤
Door closed (Prime winding	3.854	≤	≤	X		≤
Door open (Redundant)	7 914	≤	X	X		≤
Door closed (Redundant)	3 861	≤	X	X		≤

DISTRIBUTION LIST

INTERNAL	EXTERNAL
I K Stewart	N Morris (RAL)
R Coupe	

CHANGE RECORD

CHANGE NUMBER	CLASS	CHANGE DETAILS	ISSUE
3164- 00344	-	First Issue	1
3164-00355	II	UPDATE	2

APPENDICES

APPENDIX 1 SSH Electrical Pin Survey

APPENDIX 2 Hinge drive stepper motor / potentiometer error calibration results

APPENDIX 3 RAL Thermal Vacuum Test Chamber Report AIV-99-092-STC

APPENDIX 1 SSH Electrical Pin Survey

SSH PIN SURVEY

SOCKET P212S

P211S	Function	Destn	Wire Groups	Wire Type	Comments
3	SSH HWA Shield		Common to HWA A,B	2TS22	
1	SSH HWA Heater A Drive		Grouped with 1, 11, 3	2TS22	81.8Ω
11	SSH HWA Heater A Return		Grouped with 1, 11, 3	2TS22	
2	SSH HWA Heater B Drive		Grouped with 2, 6, 3	2TS22	79.4Ω
6	SSH HWA Heater B Return		Grouped with 2, 6, 3	2TS22	
8	SSH Drive Motor A Shield		Grouped with 7, 12, 13, 8	3TS24	
7	SSH Motor A Phase 1 Drive		Grouped with 7, 12, 13, 8	3TS24	**SEE NOTE 1**
12	SSH Motor A Phase 2 Drive		Grouped with 7, 12, 13, 8	3TS24	**SEE NOTE 1**
13	SSH Motor A Phase 3 Drive		Grouped with 7, 12, 13, 8	3TS24	**SEE NOTE 1**
9	SSH Motor B Phase 1 Drive		Grouped with 9, 10, 14, 15	3TS24	**SEE NOTE 2**
10	SSH Drive Motor B Shield		Grouped with 9, 10, 14, 15	3TS24	
14	SSH Motor B Phase 2 Drive		Grouped with 9, 10, 14, 15	3TS24	**SEE NOTE 2**
15	SSH Motor B Phase 3 Drive		Grouped with 9, 10, 14, 15	3TS24	**SEE NOTE 2**
4	Spare				
5	Spare				

Note 1. PIN 7→12 = 111.8Ω
PIN 7→13 = 111.6Ω
PIN 12→13 = 111.7Ω

Note 2. PIN 9→14 = 111.7Ω
PIN 9→15 = 111 4Ω
PIN 14→15 = 111.3Ω

SSH PIN SURVEY

SOCKET P212S

P212S	Function	Destn	Wire Groups	Wire Type	Comments
1	SSH Sun Sensor B Cable Shield		Grouped with 1, 2, 17, 18, 31, 32	5TS26	
2	SSH Sun Sensor B Cathode 2	2.58 KΩ	Grouped with 1, 2, 17, 18, 31, 32	5TS26	TO PIN 31
17	SSH Sun Sensor B Cathode 1	2.58 KΩ	Grouped with 1, 2, 17, 18, 31, 32	5TS26	TO PIN 31
18	SSH Sun Sensor B Cathode 4	O/C	Grouped with 1, 2, 17, 18, 31, 32	5TS26	TO PIN 31
31	SSH Sun Sensor B Anodes		Grouped with 1, 2, 17, 18, 31, 32	5TS26	
32	SSH Sun Sensor B Cathode 3	2.58KΩ	Grouped with 1, 2, 17, 18, 31, 32	5TS26	TO PIN 31
11	SSH Latch Fully Disengaged uSW N.C.	O/C	Grouped with 11, 27, 41	3TS26	TO PIN 27 (DISENGAGED)
27	SSH Latch Fully Disengaged uSW Com		Grouped with 11, 27, 41	3TS26	
41	SSH Latch Fully Disengaged uSW N.O.	S/C	Grouped with 11, 27, 41	3TS26	TO PIN 27 (DISENGAGED)
12	SSH Door Fully Closed uSW N.C.	O/C	Grouped with 12, 28, 42	3TS26	TO PIN 28 (CLOSED)
28	SSH Door Fully Closed uSW Com		Grouped with 12, 28, 42	3TS26	
42	SSH Door Fully Closed uSW N.O.	S/C	Grouped with 12, 28, 42	3TS26	TO PIN 28 (CLOSED)
13	SSH Latch Fully engaged uSW N.C.	O/C	Grouped with 13, 29, 43	3TS26	TO PIN 29 (ENGAGED)
29	SSH Latch Fully engaged uSW Com		Grouped with 13, 29, 43	3TS26	
43	SSH Latch Fully engaged uSW N.O.	S/C	Grouped with 13, 29, 43	3TS26	TO PIN 29 (ENGAGED)
14	SSH Door Fully Open uSW N.C.	O/C	Grouped with 14, 30, 44	3TS26	TO PIN 30 (OPEN)
30	SSH Door Fully Open uSW Com		Grouped with 14, 30, 44	3TS26	
44	SSH Door Fully Open uSW N.O.	S/C	Grouped with 14, 30, 44	3TS26	TO PIN 30 (OPEN)
21	SSH Motor Temperature B Drive	115 KΩ	Grouped with 21,22	2TS26	OK
22	SSH Motor Temperature B Sense	OVL`D	Grouped with 21,22	2TS26	OK
3	SSH Sun Sensor A Cable Shield		Grouped with 3, 4, 19, 20, 33, 34	5TS26	
4	SSH Sun Sensor A Cathode 2	2.64 KΩ	Grouped with 3, 4, 19, 20, 33, 34	5TS26	TO PIN 33
19	SSH Sun Sensor A Cathode 1	2.6 0 KΩ	Grouped with 3, 4, 19, 20, 33, 34	5TS26	TO PIN 33
20	SSH Sun Sensor A Cathode 4	O/C	Grouped with 3, 4, 19, 20, 33, 34	5TS26	TO PIN 33
33	SSH Sun Sensor A Anodes		Grouped with 3, 4, 19, 20, 33, 34	5TS26	

SOCKET P212S CONT'D

P212S	Funtion	Destn	Wire Groups	Wire Ttpe	Comments
34	SSH Sun Sensor A Cathode 3	2.64 KΩ	Grouped with 3, 4, 19, 20, 33, 34	5TS26	TO PIN 33
35	SSH Motor Temperature A Drive	1.9 mΩ	Grouped with 35, 36	2TS26	OK
36	SSH Motor Temperature A Sense	OVL`D	Grouped with 35, 36	2TS26	OK
5	SSH HWA Temperature A Drive	1.9 mΩ	Grouped with 5, 6	2TS26	OK
6	SSH HWA Temperature A Sense	OVL`D	Grouped with 5, 6	2TS26	OK
7	SSH HWA Temperature B Drive		Grouped with 7, 8	2TS26	OK
8	SSH HWA Temperature B Sense		Grouped with 7, 8	2TS26	OK
9	SSH Door Position Sensor Cable Shield		Grouped with 9, 24, 25, 39	3TS26	
24	SSH Door Position Sensor Drive		Grouped with 9, 24, 25, 39	3TS26	SEE NOTE 3
25	SSH Door Position Sensor Return		Grouped with 9, 24, 25, 39	3TS26	SEE NOTE 3
39	SSH Door Position Sensor Wiper		Grouped with 9, 24, 25, 39	3TS26	SEE NOTE 3
10	Spare				
15	Spare				
16	Spare				
23	Spare				
26	Spare				
37	Spare				
38	Spare				
40	Spare				

NOTE 3. PIN 24→25 = 47.8 KΩ

PIN 24→39 = 29.7 KΩ RESULTS RECORDED AT 0°
PIN 25→39 = 18.8 KΩ

PIN 24→39 = 10.4 KΩ RESULTS RECORDED AT 123°
PIN 25→39 = 38.5 KΩ

RESULTS SHOW THAT THE SPAN OF THE DOOR IS CLEAR OF THE POTENTIOMETER DEADBAND

APPENDIX 2 Hinge drive stepper motor / potentiometer error calibration results

Potentiometer Output Voltage versus Door Angle Position

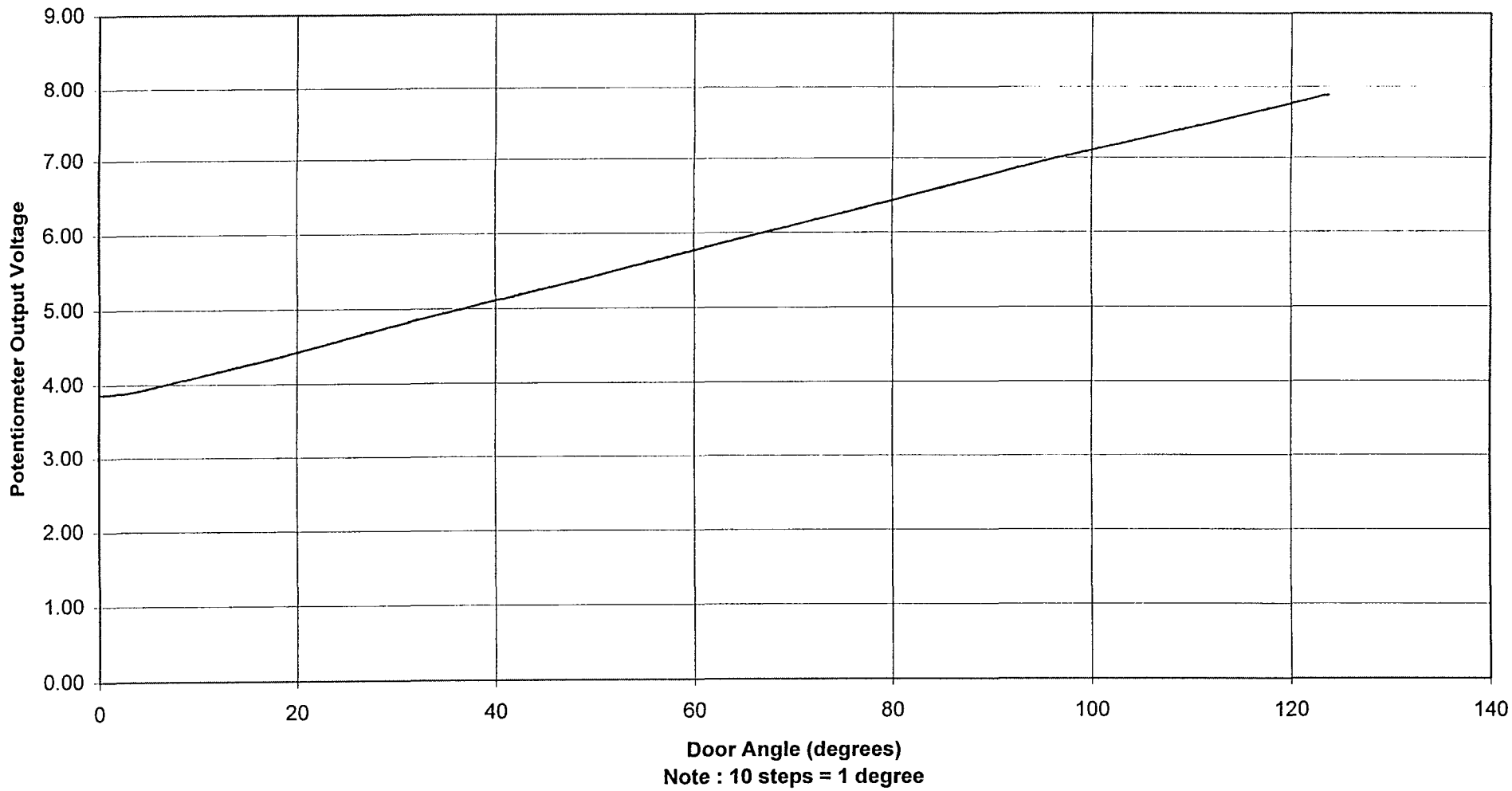

Potentiometer Output Voltage versus Hinge Drive Step Count

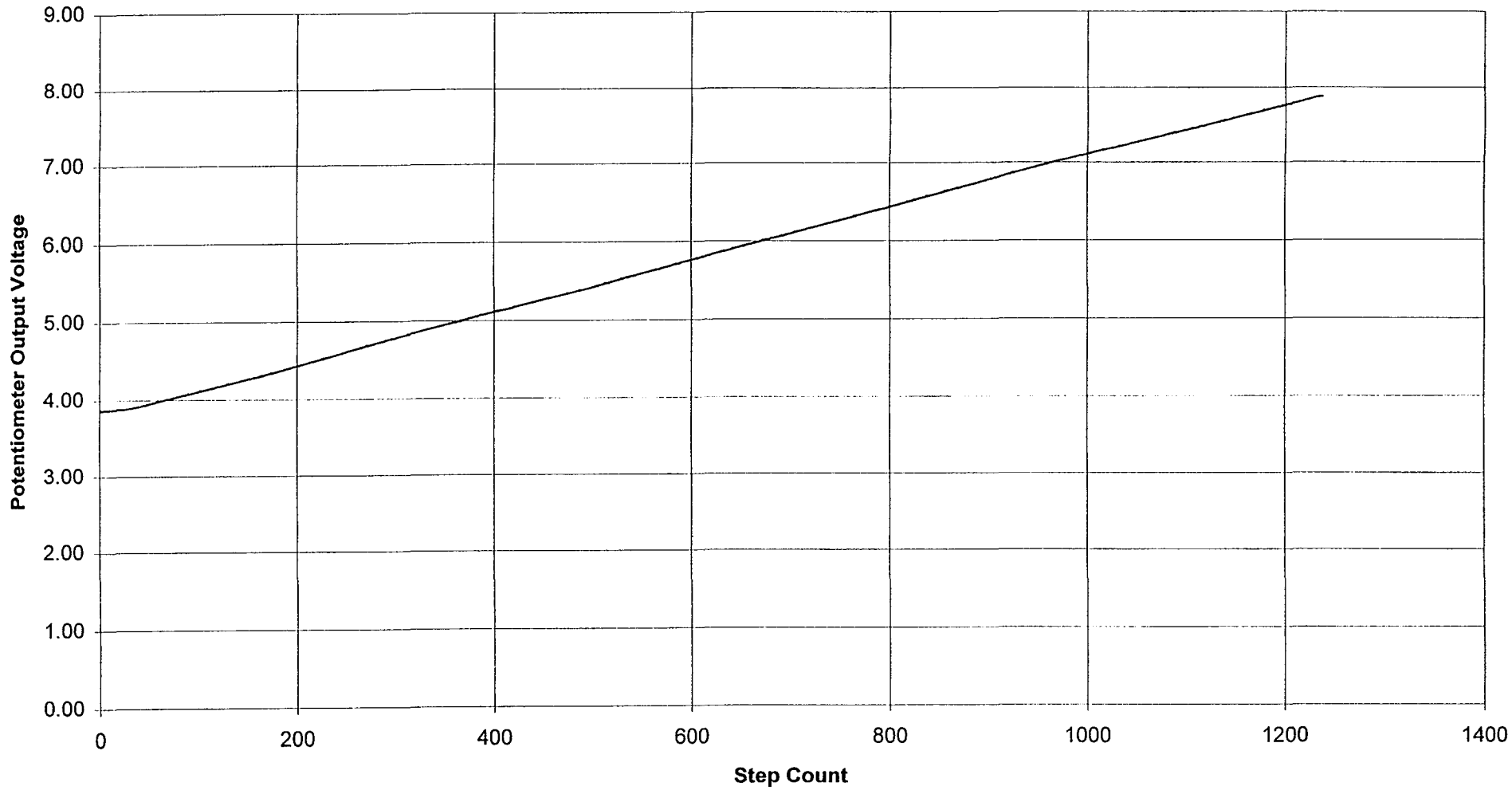

FM HIRDLS SSH: Calibration Error plot - Baseline Test - 3/9/99

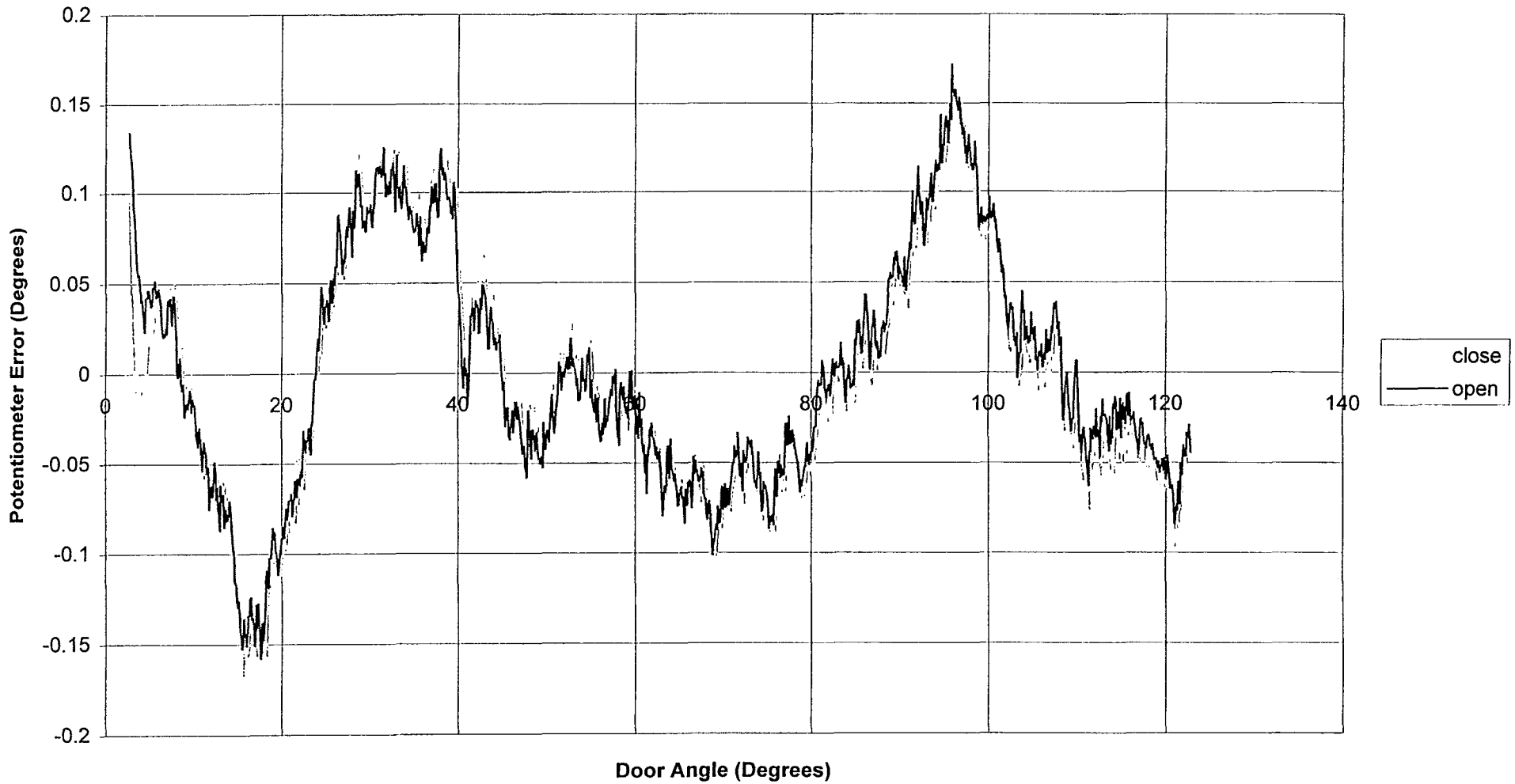

FM HIRDLS SSH: Calibration Error Plot - Post Vibration test - 9/9/99

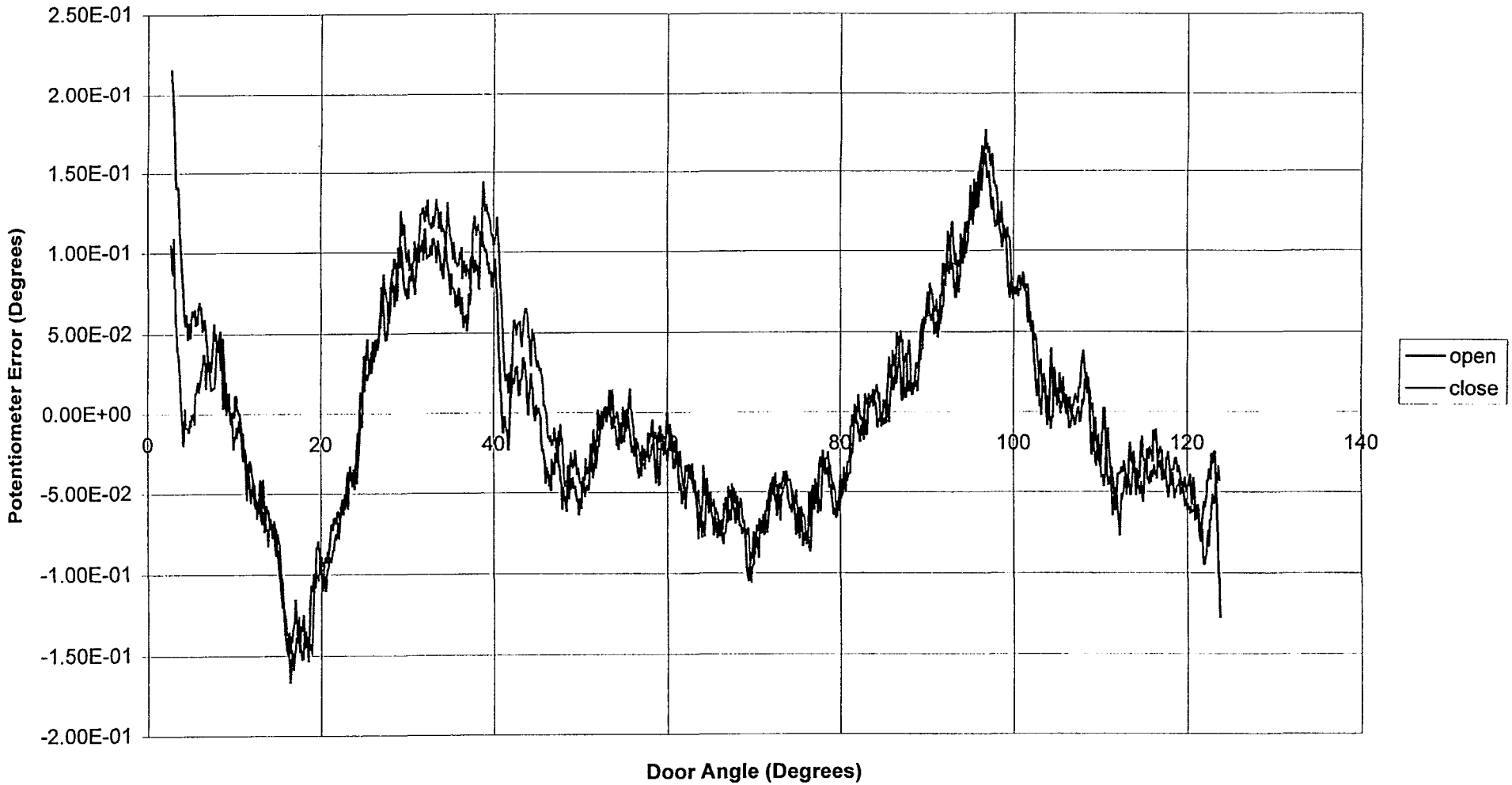

FM HIRDLS SSH : Pre Thermal Vacuum Calibration Error-27/9/99

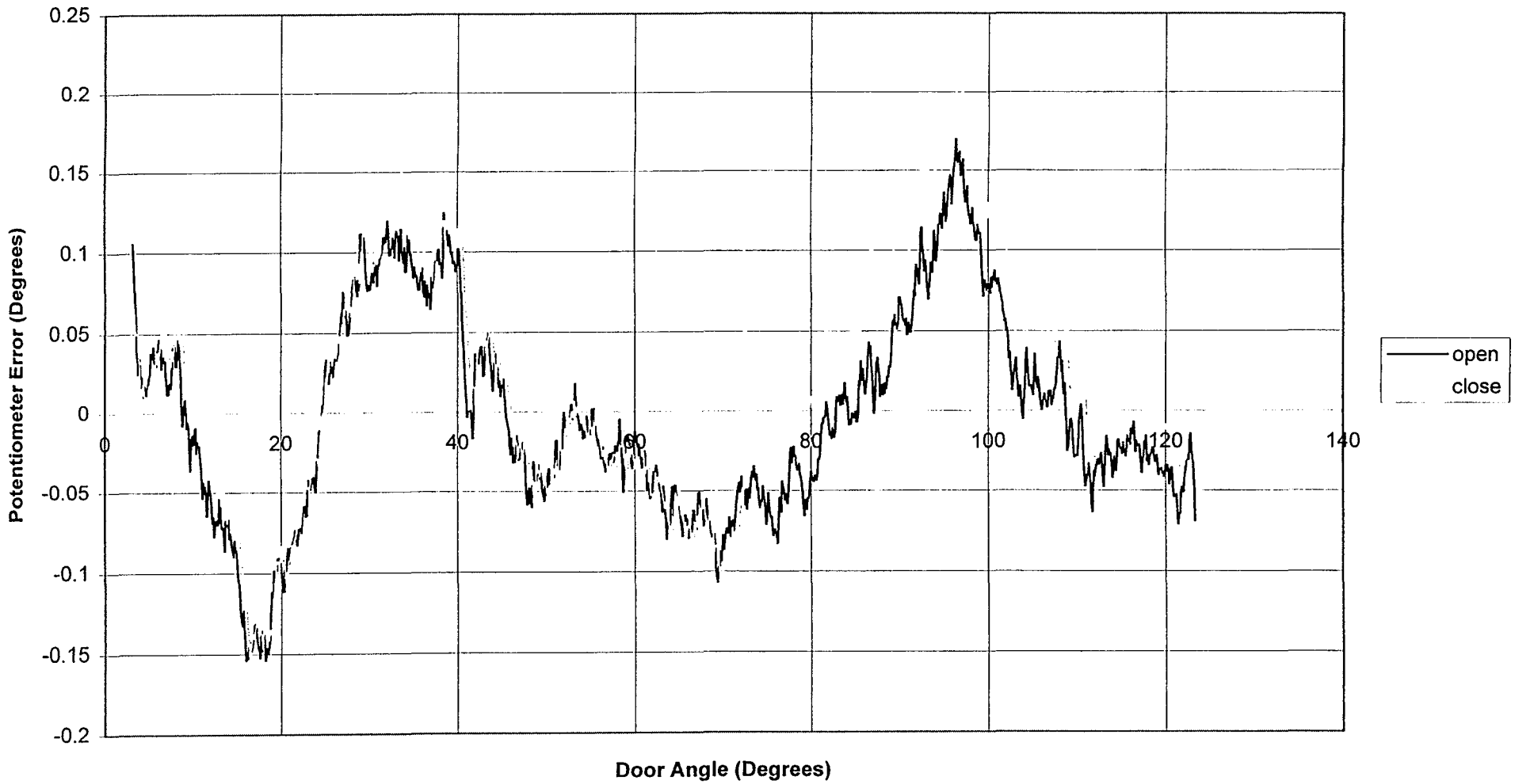

FM HIRDLS SSH : Calibration Error Plot @ 25 Degrees C -29/9/99 18:11

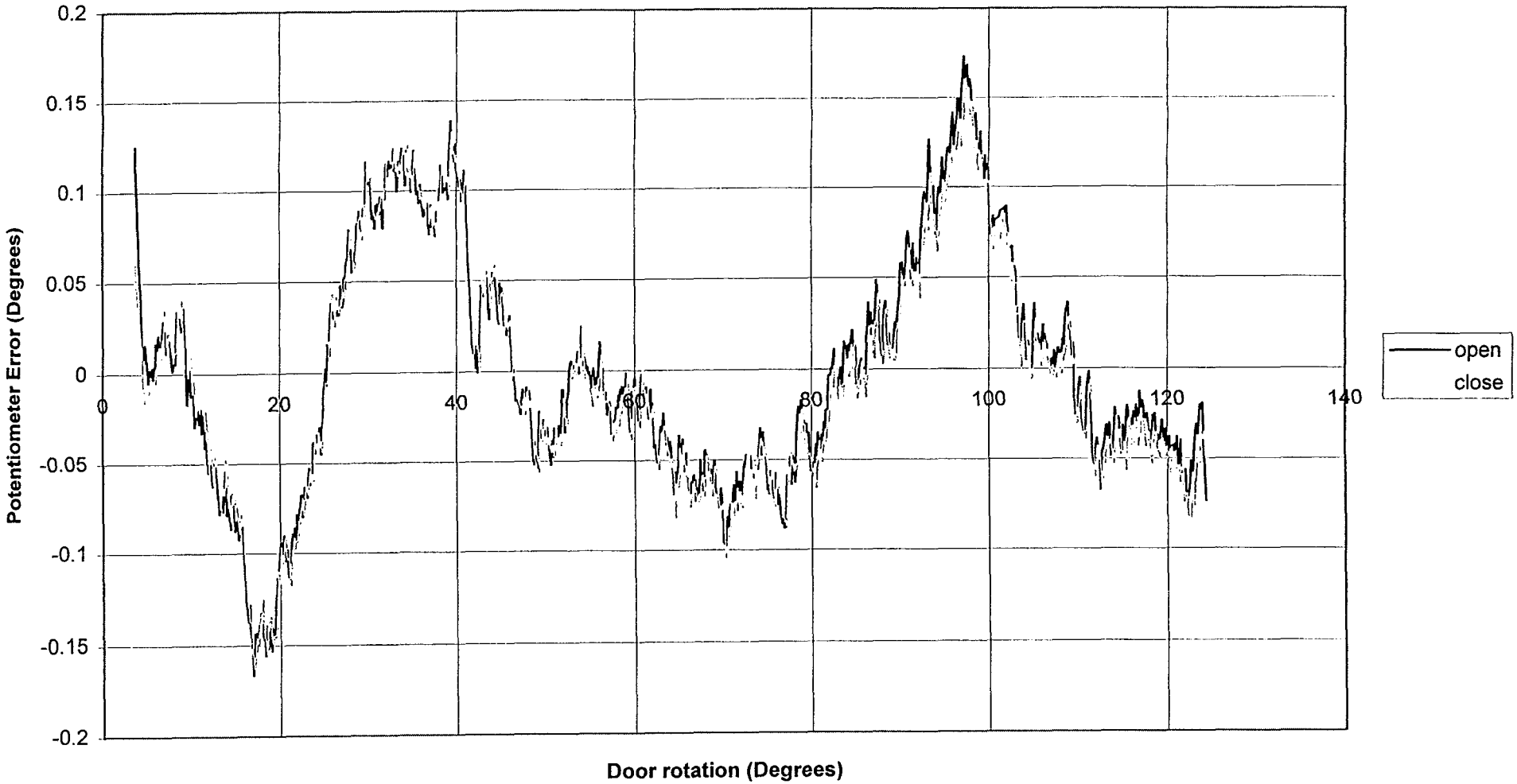

FM HIRDLS SSH :Calibration Error Plot @-25 Degees C -29/9/99 12:45

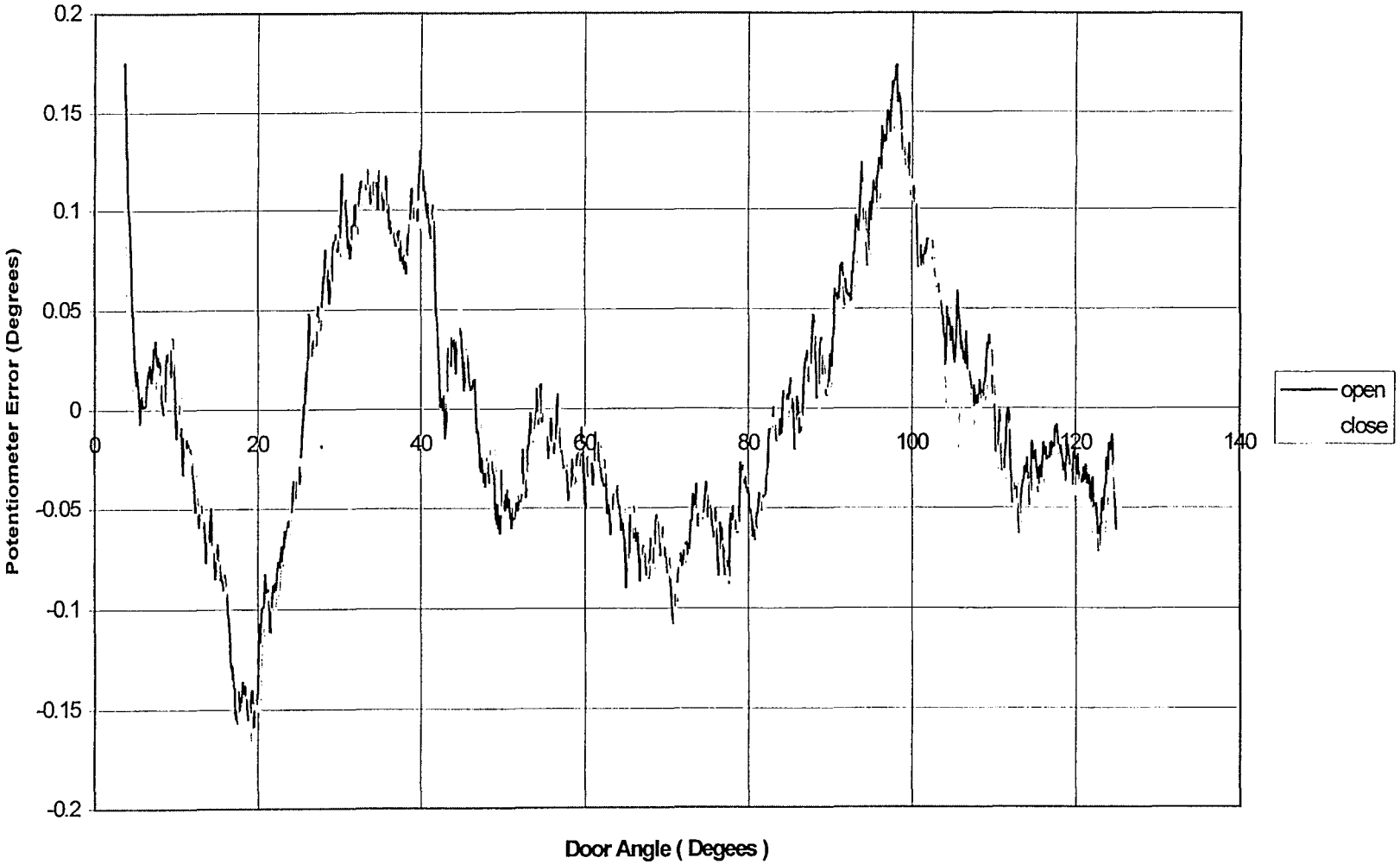

APPENDIX 3 RAL Thermal Vacuum Test Chamber Report AIV-99-092-STC

Note Figures are not included – refer to original RAL document for details

SSD ENVIRONMENTAL TESTING

HIRDLS FM DOOR

Thermal Vacuum Test

REPORT No: AIV-99-092-STC

Contents:

1) Test Specification.

2) Sensor Locations

3) Test Objectives

4) Test Results.

5) Cleanliness

6) Conclusion

Figs: 1 to 8) Thermal Cycling Mass Spectrometer Plots. (Not included herein)

Figs: 9 to 11) Temperature Vs Time Test Plots. (Not included herein)

Photograph

Annex: A) Equipment Used.

Date: 6/10/99

Reporting Officer: Pat O'Brien Ext.: 5741

Customer Organisation: Matra Maconi Space

Project: HIRDLS

Test Item: Sun Shield Assembly

Description:

Demanding Officer: Ian Stewart

Observers: Rob Coupe Steve Yardly

1) Test Specification

REQUIREMENT	TEMPERATURE
Maximum Operational	25°C
Minimum Operational	-25°C
Maximum Non Operational	25°C
Minimum Non Operational	-25°C
Maximum Rate of Change	5°C/min
Tolerances	+3°C 0°C 0°C -3°C
Temperature Vs Time Plot	Figs 9 to 11

REQUIREMENT	DURATION
Soak Time	4Hrs

REQUIREMENT	PRESSURE
Maximum Pressure	1E-5mBar

2) Sensor Locations

TC	POSITION	FUNCTION
PL16	Stepper Motor	Monitor
PL17	Potentiometer	Monitor
PL19	Far Centre of Base Plate	Monitor
PL20	Support Frame Trop Centre	Monitor
PL22	Actuator	Monitor
PL23	Near Centre Base Plate	Monitor
PL24	Potentiometer Frame	Monitor
PL25	Front Thermal Plate	Monitor
PL26	Rear Thermal Plate	Monitor
PL29	Lower Hinge	Monitor

3) Test Objectives

The objective of the test was to thermally cycle SSH FM between 25°C and -25°C and perform functional tests at three predetermined points

4) Test Results:

Parameter	Date	Time	Temperature	Pressure
Pumpdown Initiated	27/09/99	16 20		
Start Thermal Cycling	29/09/99	07 40	19 0°C	2 3 E-6
Finish Thermal Cycling	02/10/99	19 00	30°C	3 5 E-7
Letup Initiated	03/10/99	07 45	20°C	6 6 E-7
Maximum Pressure At	29/09/99	07.40	19°C	2 3 E-6
Minimum Pressure At	02/10/99	13 00	-21°C	9 9 E-8

5) Cleanliness:

Test Type	Cleanliness	Status	Peaks	Figures
Pre Test Calibration	Satisfactory	Normal		
Thermal Testing	Satisfactory	Normal	18 & 28	

Comments:

The SSH was mounted on a thermal plate which in turn was installed in the Space Test Chamber. Both the tank shroud and the thermal plate were cycled through the test profile together.

6) Conclusion

A thermal vacuum test was performed on HIRDLS SSH successfully

Thermal Vacuum Operations Manager.

Date:

SSH in Space Test Chamber

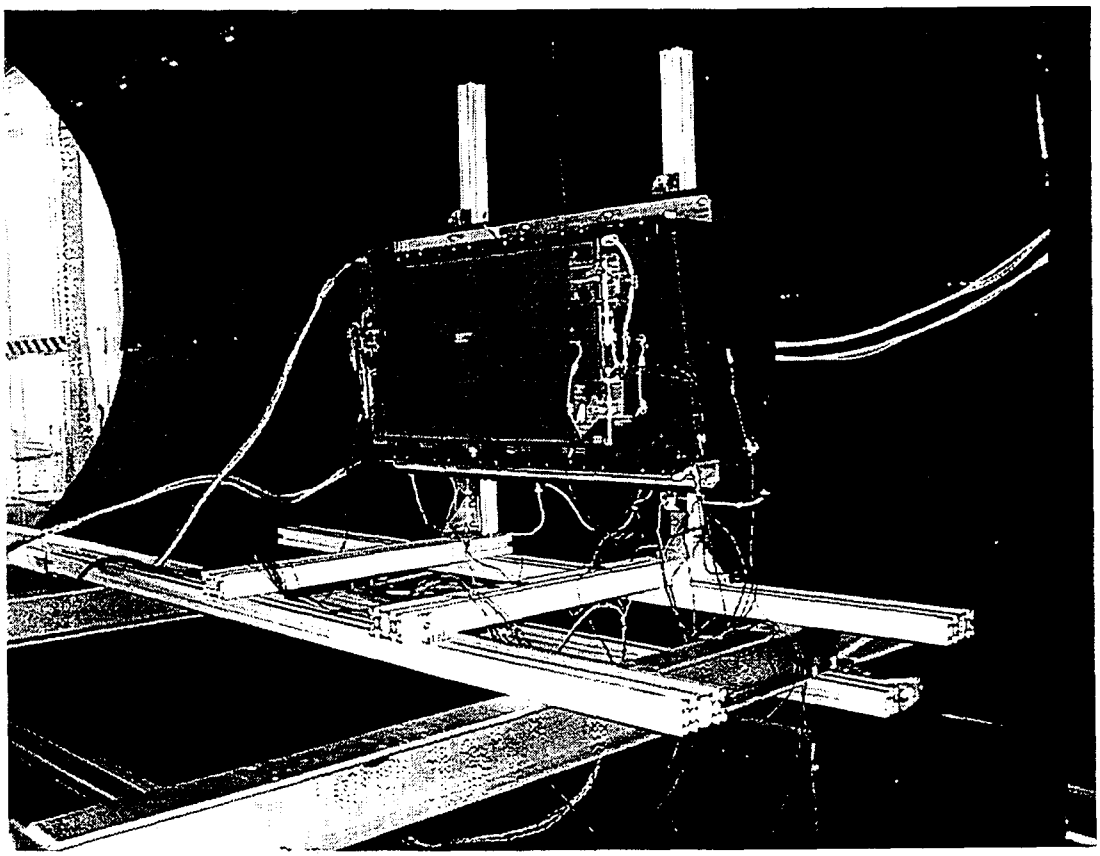

Annex A

EQUIPMENT USED

Equipment	Manufacturer	Type	Calibration Date	Certificate No	Comments
Mass Spectrometer 0-200 AMU	Spectra Metrics	Multi Quad Head 1	18/09/98	NA	Calibrated by Original Equipment Manufacturer
Vacuum gauges	Balzers	TPG300 Pirani/Penning	NA	NA	
Monitoring PRT's	TC LTD	PT100 Class A	Jan 99	NA	In house Calibration
Temperature Controller	Eurotherm	PC 3000	JAN 99	NA	In house Calibration
Data acquisition system	Measurement Systems	Datascan Modules	JAN 99	NA	In house Calibration
Calibrator	Beamax	TC 303	25/07/99	0081517	Absolute Calibration Ltd

HIRDLS

TR-MMS-459
(3164-SA032-TRF)
Issue 1

HIGH RESOLUTION DYNAMICS LIMB SOUNDER

Originator: N Crossland Date: 8 September, 1999

Subject/Title: **FM SSH Vibration Test Report**

Description/Summary/Contents:

The Sunshield Subsystem (SSH) Flight Model (FM) has been successfully subjected to workmanship level vibration testing

Keywords: SSH, FM, Vibration

Purpose of this Document. SSH Test Report

Reviewed/Approved by:			
Date (yy-mm-dd)	99-09-29		

Matra Marconi Space
Anchorage Road
Portsmouth
Hampshire PO3 5PU
England

EOS

ORIGINAL WHEN RED

SUNSHIELD SUBSYSTEM (SSH)
FLIGHT MODEL (FM)
VIBRATION TEST REPORT

Responsible Engineer. N Grossland Date 27th Sept 1999

Quality Assurance Date 29-9-99

Project Manager. Date: 28 Sept 99

© MATRA MARCONI SPACE UK LIMITED

THE COPYRIGHT IN THIS DOCUMENT IS THE PROPERTY OF MATRA MARCONI SPACE UK LIMITED This document is supplied by Matra Marconi Space UK Limited on the express terms that it is to be treated as confidential and that it may not be copied, used or disclosed to others for any purpose except as expressly authorised under the terms of Contract No N2A 3R 0386

Any person, other than the authorised holder, who finds or otherwise obtains possession of the document, should post it, together with his/her name and address, to the Registry, Matra Marconi Space UK Limited, Anchorage Road, Portsmouth, England, PO3 5PU Postage will be refunded

CONTENTS

1. SUMMARY 4

2. INTRODUCTION 4

3. APPLICABLE DOCUMENTS 4

4. TEST ITEM 4

5. TEST LOCATION AND EQUIPMENT 5

5 1 TEST LOCATION 5
5 2 TEST EQUIPMENT 5

6. VIBRATION TEST SEQUENCE 6

7. VIBRATION TESTS 7

7 1 JIG SURVEY 7
7.2 LOW LEVEL SINE SURVEY 7
7 3 WORKMANSHIP LEVEL RANDOM TEST 7

8. RESULTS 8

9. CONCLUSIONS 9

DISTRIBUTION LIST 30

CHANGE RECORD 30

1. SUMMARY

This report summarises the workmanship level vibration tests performed on the HIRDLS Sunshield Subsystem (SSH) Flight Model (FM)

The test results show that the unit has a first natural frequency of approximately 64 Hz. This contravenes the 120 Hz requirement but is acceptable at a system level for the reasons given in Section 8

The unit completed workmanship level vibration testing with no detectable structural degradation. No significant variations were detected in the results of the low level sine surveys performed before, during, and after any of the tests.

2. INTRODUCTION

The HIRDLS SSH Flight Model has been subjected to workmanship level vibration tests. The findings are reported herein.

The purpose of the tests is to verify the build standard of the unit.

3. APPLICABLE DOCUMENTS

AD 1	SP-HIR-50 Issue D	Sunshield Subsystem Requirements Specification
AD 2	HR1L100 Issue 001	Sunshield / HDA Assembly
AD 3	TP-MMS-452 Issue 1	Sunshield Assembly FM Test Procedure
AD 4	ELCL2400	HIRDLS SSH S/N FM Vibration Test Log Book
AD 5	HDRLS-PA-001	SSH FM Test Readiness Review Minutes
AD 6	HIR-RD-SA001-MMP	Waiver for LTM SSH first resonance

4. TEST ITEM

The test item is the SSH FM as defined in Drawing Number HR1L100 Issue 1 (AD 2) Figure 1 shows the location of the 2 triaxial accelerometers used to monitor unit responses and defines the test axes

Testing was carried out in accordance with the Test Procedure (AD 3).

5. TEST LOCATION AND EQUIPMENT

5.1 Test Location

The SSH FM was subjected to qualification level testing in the Environmental Test Laboratory, MMS, Portsmouth, England, over the period 7-8 September 1999.

5.2 Test Equipment

All tests were performed using the Ling L980 vibrator which is capable of being turned through 90° to enable testing in all 3 axes.

The Genrad Spectral Dynamics 2552B controller was used for both sine and random vibration testing. A 2 point average control strategy was adopted; the 2 points being at opposite diagonal corners of the vibration jig

Endevco accelerometers and Kistler charge amplifiers were used to monitor and control the tests All data was stored and subsequently analysed on the Cranfield Data Systems EDASP 7610 data analyser

A full equipment list and calibration data is contained in the Environmental Test Log Book (AD 4) which is available for examination at the location detailed in Section 5.1

6. VIBRATION TEST SEQUENCE

Prototype qualification level vibration testing was carried out in accordance with the sequence specified in Table 7-1 Note that qualification level sine vibration tests have been added to the sequence defined in AD 3 for the reasons discussed in Section 8 This and other minor changes to the Test Procedure were subject to standard company occurrence reporting procedures.

Test No	Description	Axis	Table
1	Jig survey	Z	7 1-1
2	Low level sine survey	Z	7 1-1
3	Workmanship level random	Z	7 3-1
4	Low level sine survey	Z	7.1-1
5	Jig survey	Y	7 1-1
6	Low level sine survey	Y	7.1-1
7	Workmanship level random	Y	7.3-1
8	Low level sine survey	Y	7.1-1
9	Jig survey	X	7 1-1
10	Low level sine survey	X	7 1-1
11	Workmanship level random	X	7.3-1
12	Low level sine survey	X	7.1-1

Table 6-1 Workmanship Vibration Test Sequence

7. VIBRATION TESTS

7.1 Jig Survey

Vibration jig surveys were performed by a single sweep increasing in frequency as defined in Table 7 1-1.

AXIS	FREQUENCY (Hz)	ACCELERATION	SWEEP RATE (Oct/min)
ALL	5 - 2000	± 0.2g	2

Table 7.1-1 Jig and Low Level Sine Survey

7.2 Low Level Sine Survey

Low level sine surveys were performed by a single sweep increasing in frequency as defined in Table 7.1-1

7.3 Workmanship Level Random Test

Workmanship level random vibration testing was performed to the levels defined in Table 7 3-1.

AXIS	FREQUENCY (Hz)	PSD (g^2/Hz)	DURATION
ALL	20 20 – 160 160 – 250 250 – 2000 2000	0.01 +3 dB / octave 0.08 -3 dB / octave 0 01	1 minute
	Overall	7.4 g RMS	

Table 7.3-1 Workmanship Random Vibration Levels

8. RESULTS

A complete record of all test data is available for examination at the location detailed in Section 5.1.

The following response plots are included herein :-

Figure 2	Random response – Position 1x in-axis
Figure 3	Random response – Position 2x in-axis
Figure 4	Random response – Position 1y in-axis
Figure 5	Random response – Position 2y in-axis
Figure 6	Random response – Position 1z in-axis
Figure 7	Random response – Position 2z in-axis
Figure 8	Pre and Post random test low level sine responses – Position 1x in-axis
Figure 9	Pre and Post random test low level sine responses – Position 2x in-axis
Figure 10	Pre and Post random test low level sine responses – Position 1y in-axis
Figure 11	Pre and Post random test low level sine responses – Position 2y in-axis
Figure 12	Pre and Post random test low level sine responses – Position 1z in-axis
Figure 13	Pre and Post random test low level sine responses – Position 2z in-axis
Figure 14	EM and FM low level sine responses – Position 1x in-axis
Figure 15	EM and FM low level sine responses – Position 2x in-axis
Figure 16	EM and FM low level sine responses – Position 1y in-axis
Figure 17	EM and FM low level sine responses – Position 2y in-axis
Figure 18	EM and FM low level sine responses – Position 1z in-axis
Figure 19	EM and FM low level sine responses – Position 2z in-axis

Figures 2 – 7 show the peak responses and overall G r m.s levels recorded at each accelerometer position during random vibration testing.

Figures 8 – 13 show that there are no significant variations between the results of the low level sine surveys performed before and after the random vibration tests

Figures 14 – 19 compare responses measured during SSH Engineering Model testing with the Flight Model data at the corresponding accelerometer locations. They illustrate good repeatability for the main equipment resonance's which implies an equivalent FM build standard to the qualified EM design

No Occurrence Reports were raised during testing.

A waiver has been raised against the Specification requirement that the first SSH resonance shall be greater than 120 Hz This is identical to AD 6 which was accepted and approved for the Engineering Model

9. CONCLUSIONS

1. The SSH FM has been shown to have a first natural frequency of approximately 64 Hz. This does not satisfy the requirements of AD 1 but is considered to be acceptable. A waiver has been raised for Project approval for this discrepancy

2 The SSH FM has been subjected to workmanship level vibration tests without detectable mechanical failure

3 No significant variations were detected in the results of the low level sine surveys performed before, during and after any of the tests.

4. Comparisons between corresponding EM and FM unit responses demonstrate good build repeatability for the SSH panels and mechanisms.

5. The SSH FM has been successfully subjected to workmanship level vibration tests. The Environmental Test Certificate is included as Figure 20

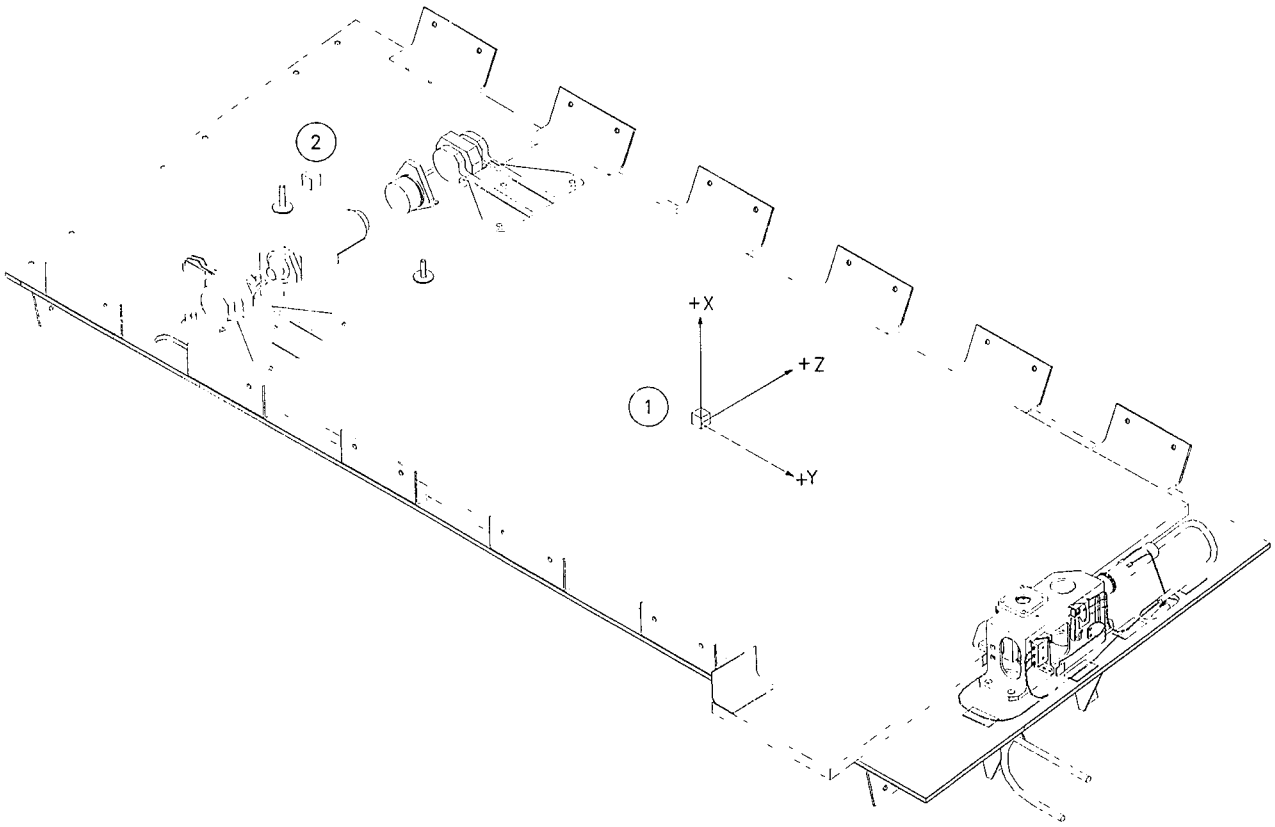

Figure 1 Test Item Monitoring Equipment

HIRDLS Sunshield & HDA Assy S/N FM001 Wed Sep 8 13:42:18 1999
Filename: il2634003.spe

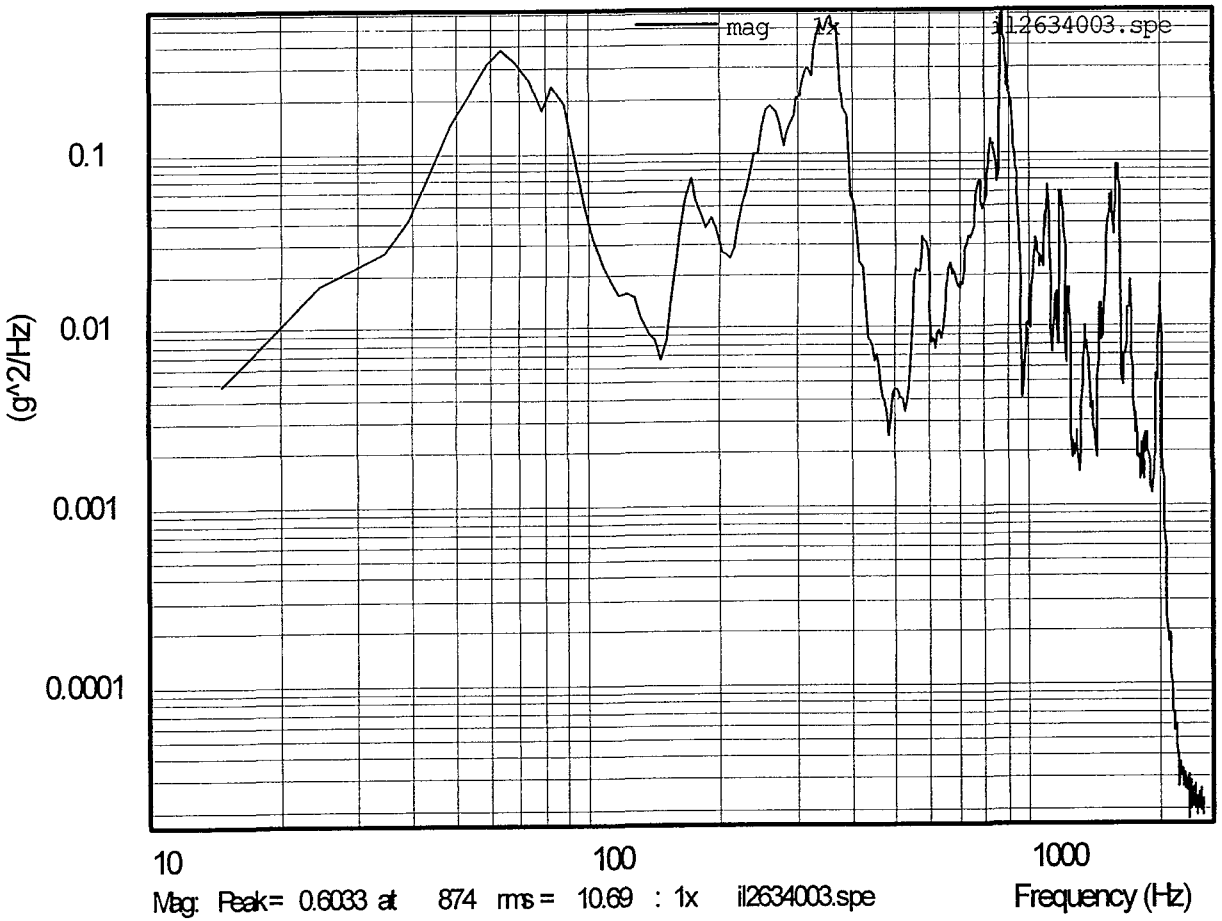

Figure 2 Random response – Position 1x in-axis

HIRDLS Sunshield & HDA Assy S/N FM001 Wed Sep 8 13:42:18 1999
Filename: il2634003.spe

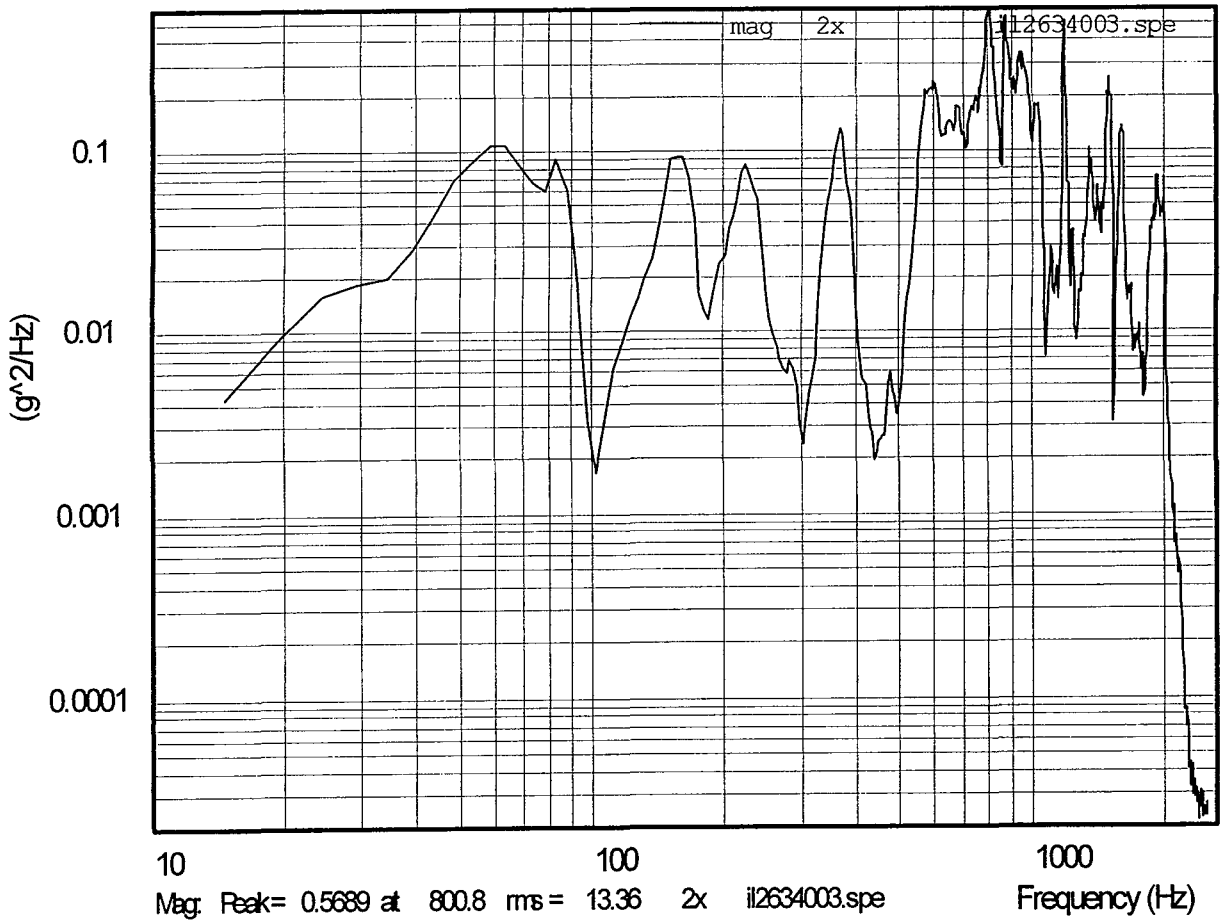

Figure 3 Random response – Position 2x in-axis

HIRDLS Sunshield & HDA Assy S/N FM001 Wed Sep 8 09:29:34 1999
Filename: il2634002.spe

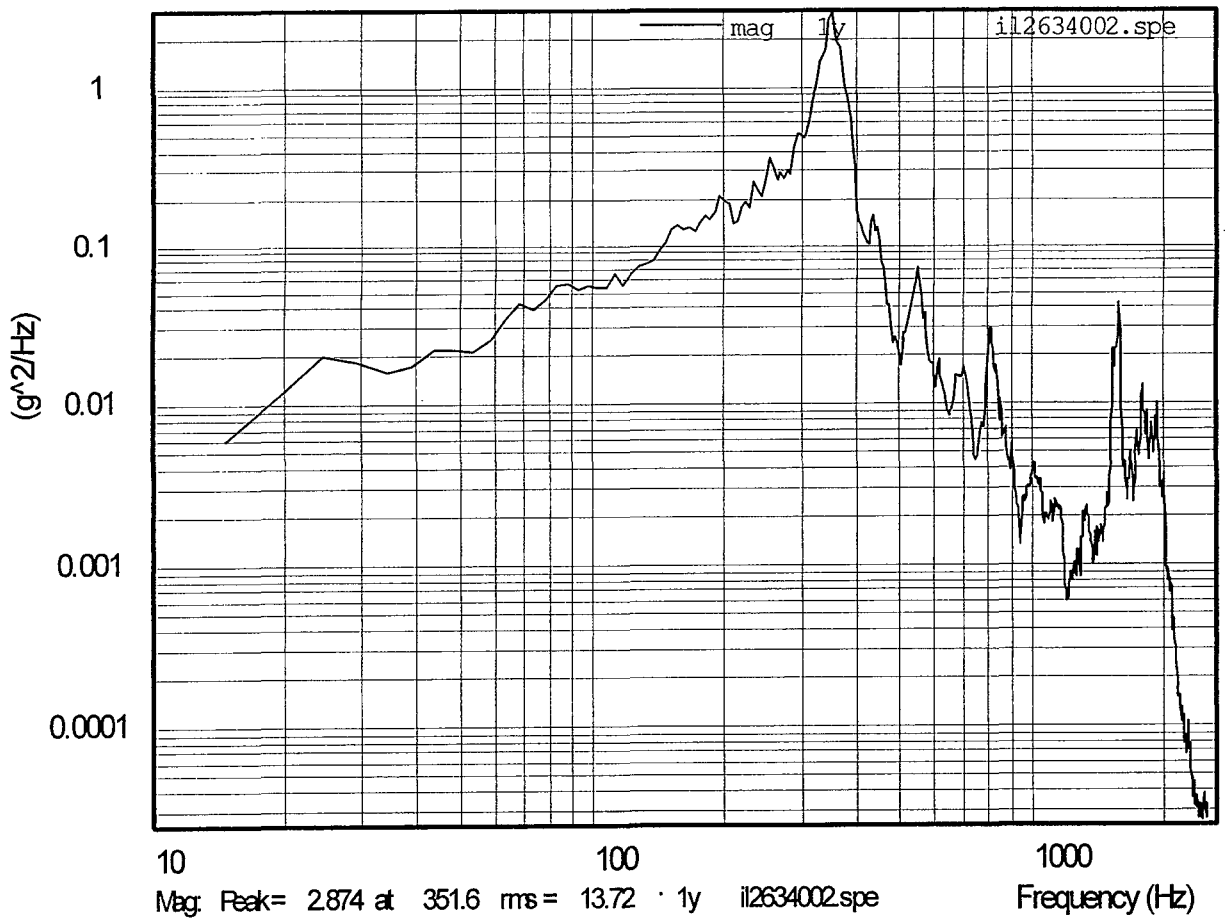

Figure 4 Random response – Position 1y in-axis

HIRDLS Sunshield & HDA Assy S/N FM001 Wed Sep 8 09:29:34 1999
Filename: il2634002.spe

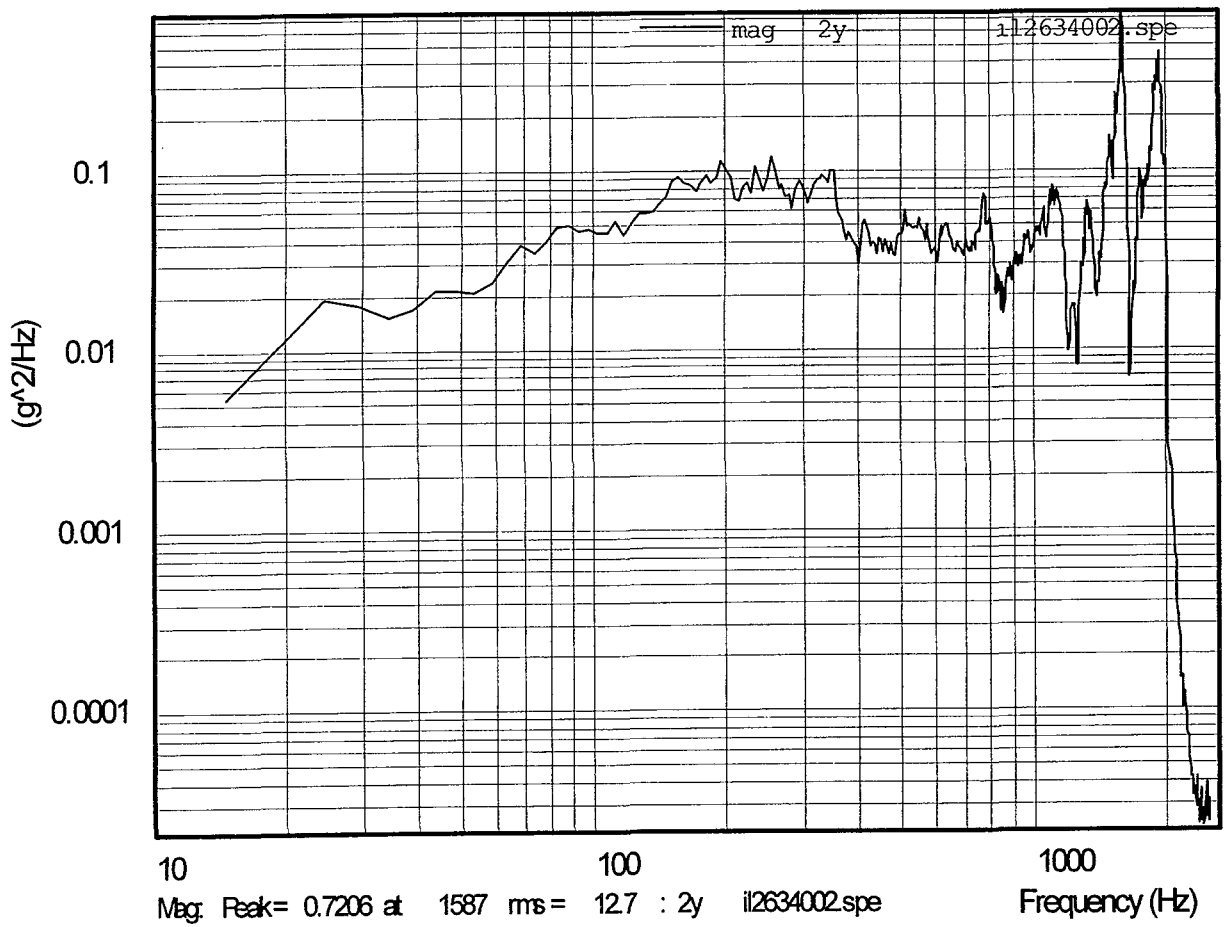

Figure 5 Random response – Position 2y in-axis

HIRDLS Sunshield & HDA Assy S/N FM001 Tue Sep 7 14:28:47 1999
Filename: il2634001.spe

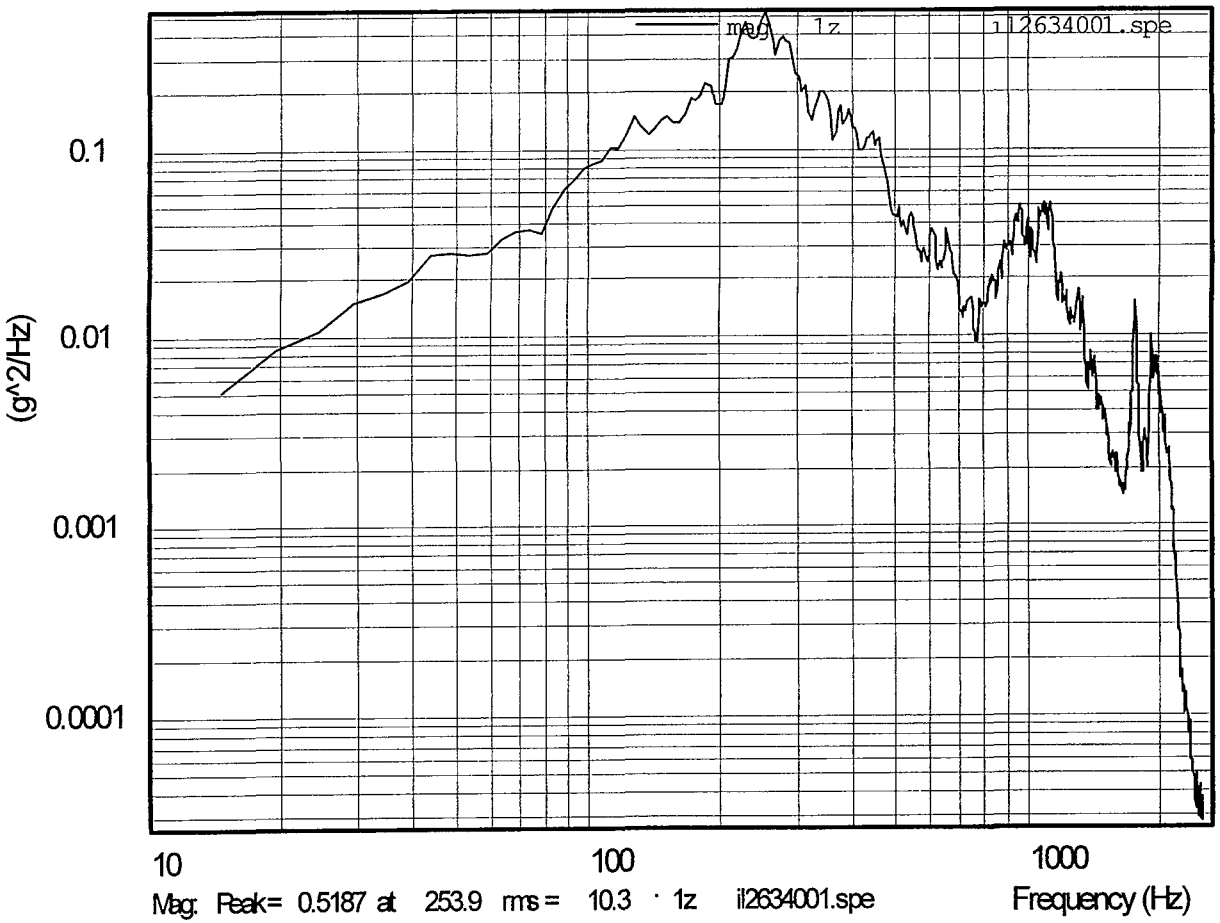

Figure 6 Random response – Position 1z in-axis

HIRDLS Sunshield & HDA Assy S/N FM001 Tue Sep 7 14:28:47 1999
Filename: il2634001.spe

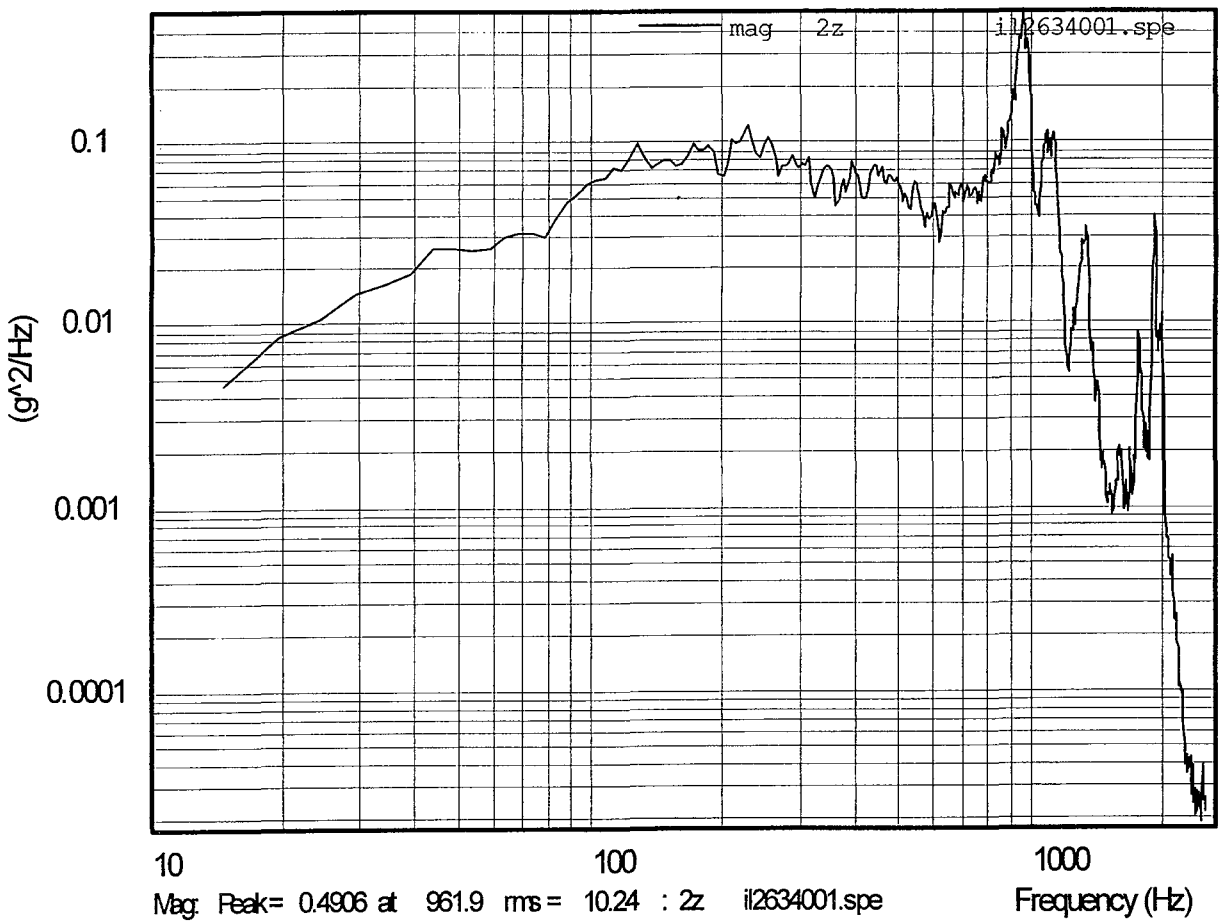

Figure 7 Random response – Position 2z in-axis

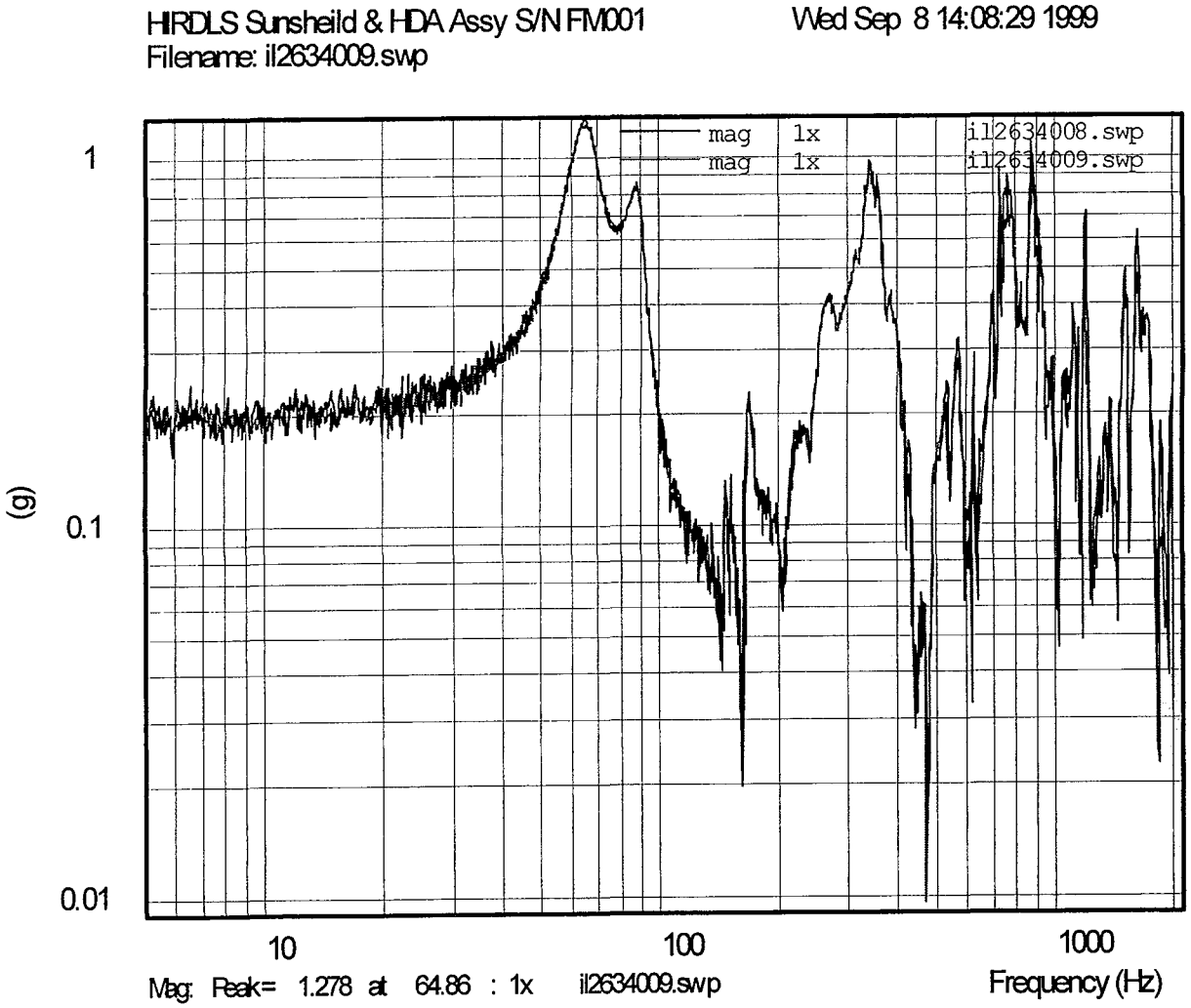

Figure 8 **Pre and Post random test low level sine responses – Position 1x in-axis**

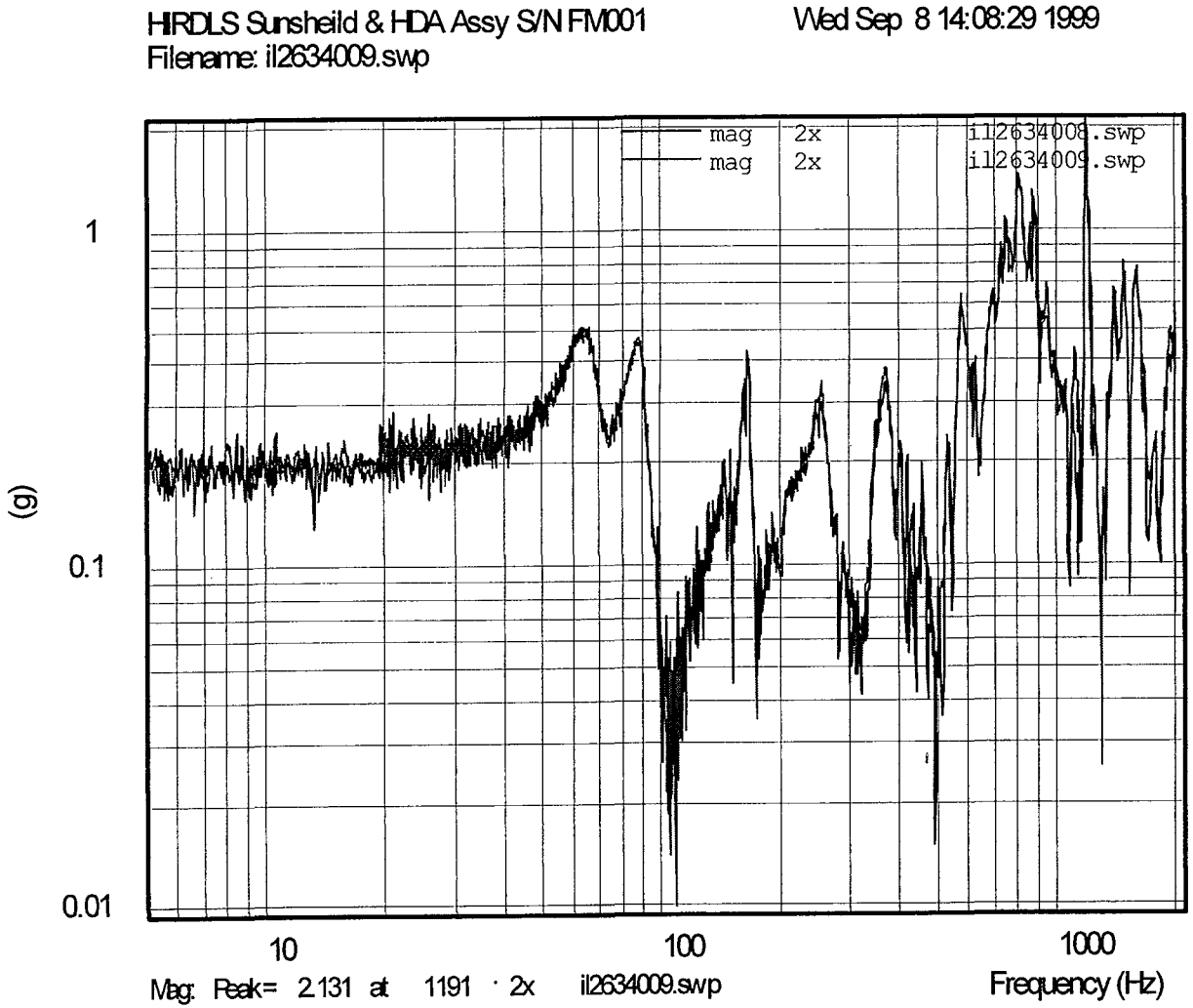

Figure 9 **Pre and Post random test low level sine responses – Position 2x in-axis**

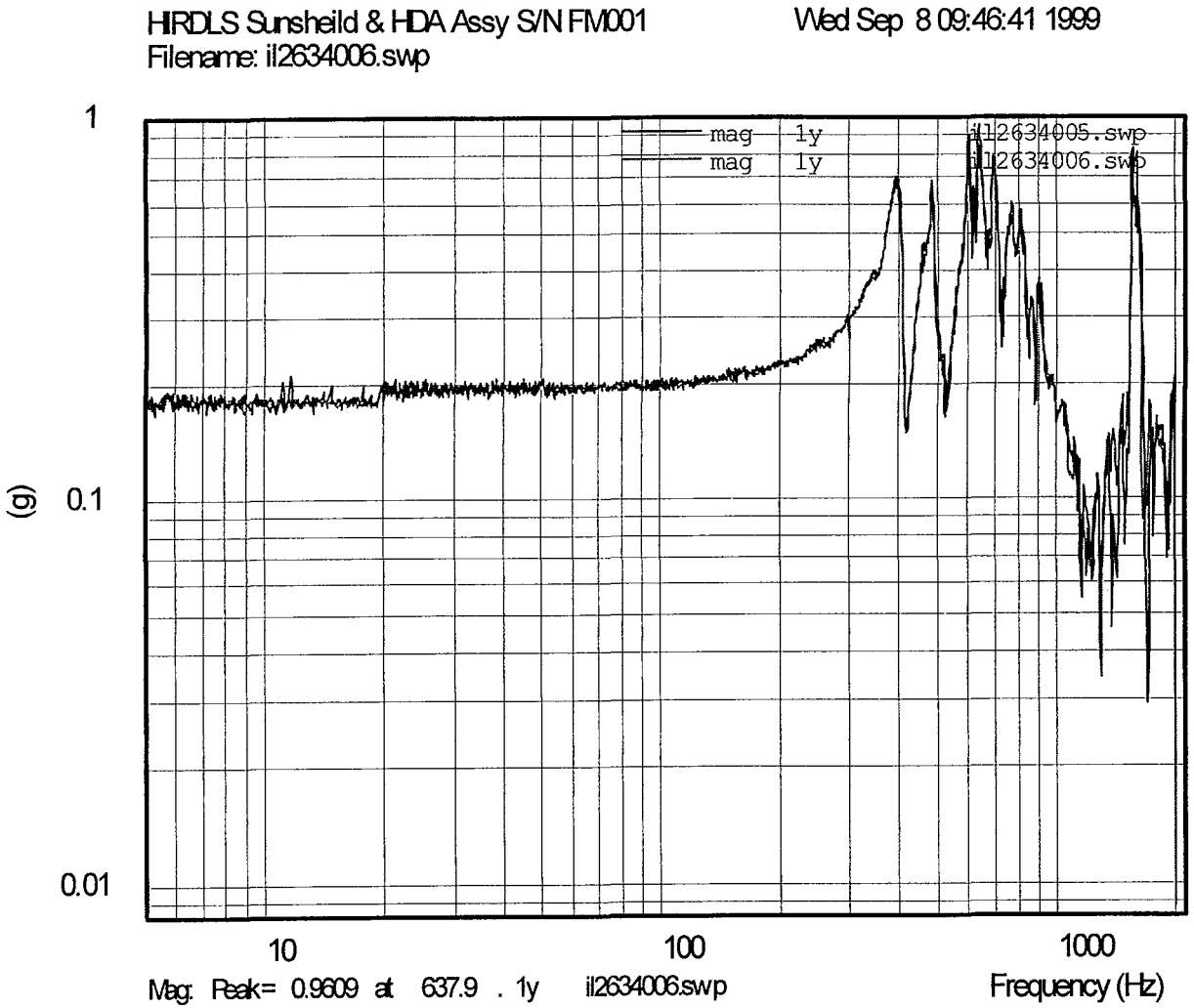

Figure 10 Pre and Post random test low level sine responses – Position 1y in-axis

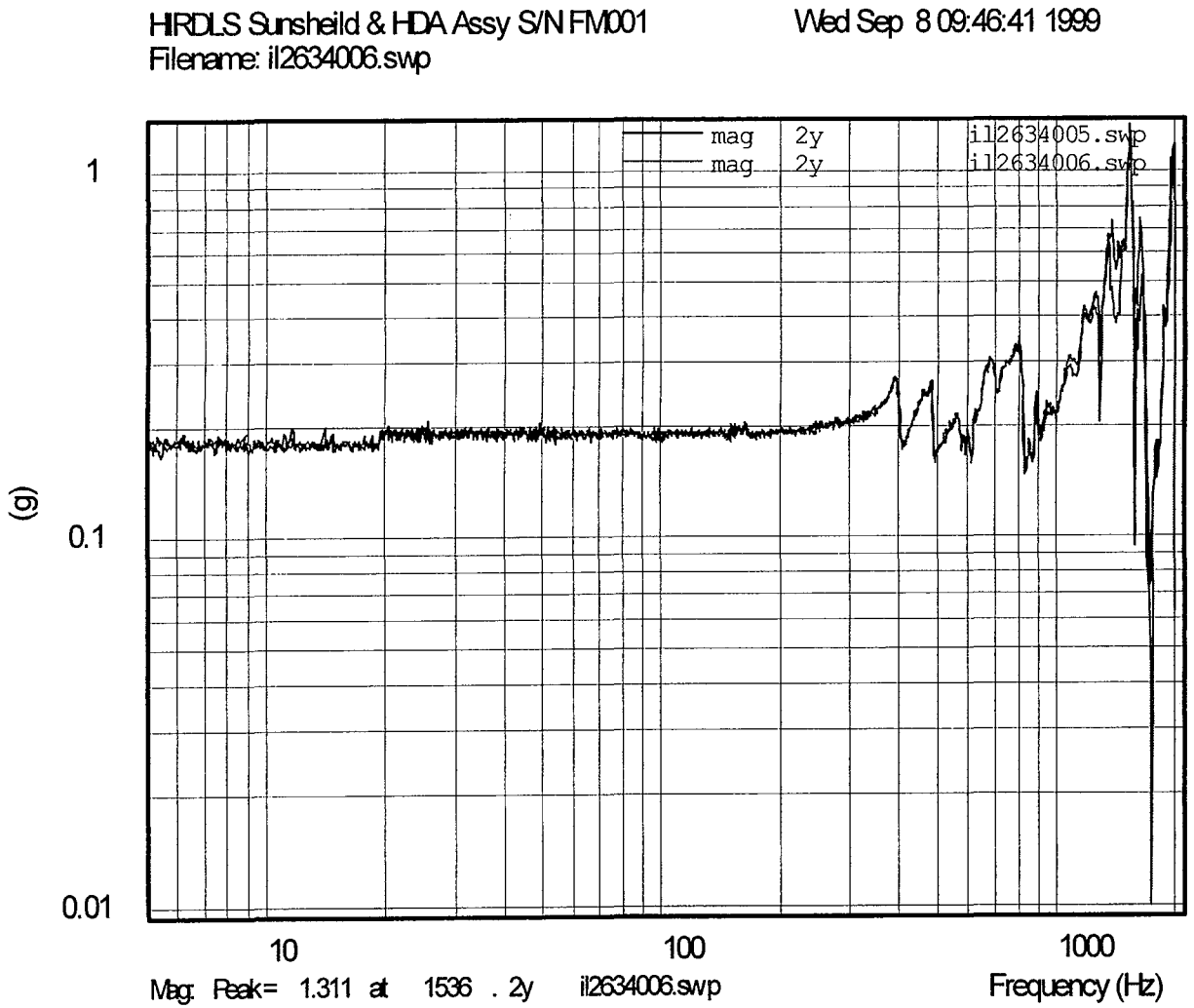

Figure 11 Pre and Post random test low level sine responses – Position 2y in-axis

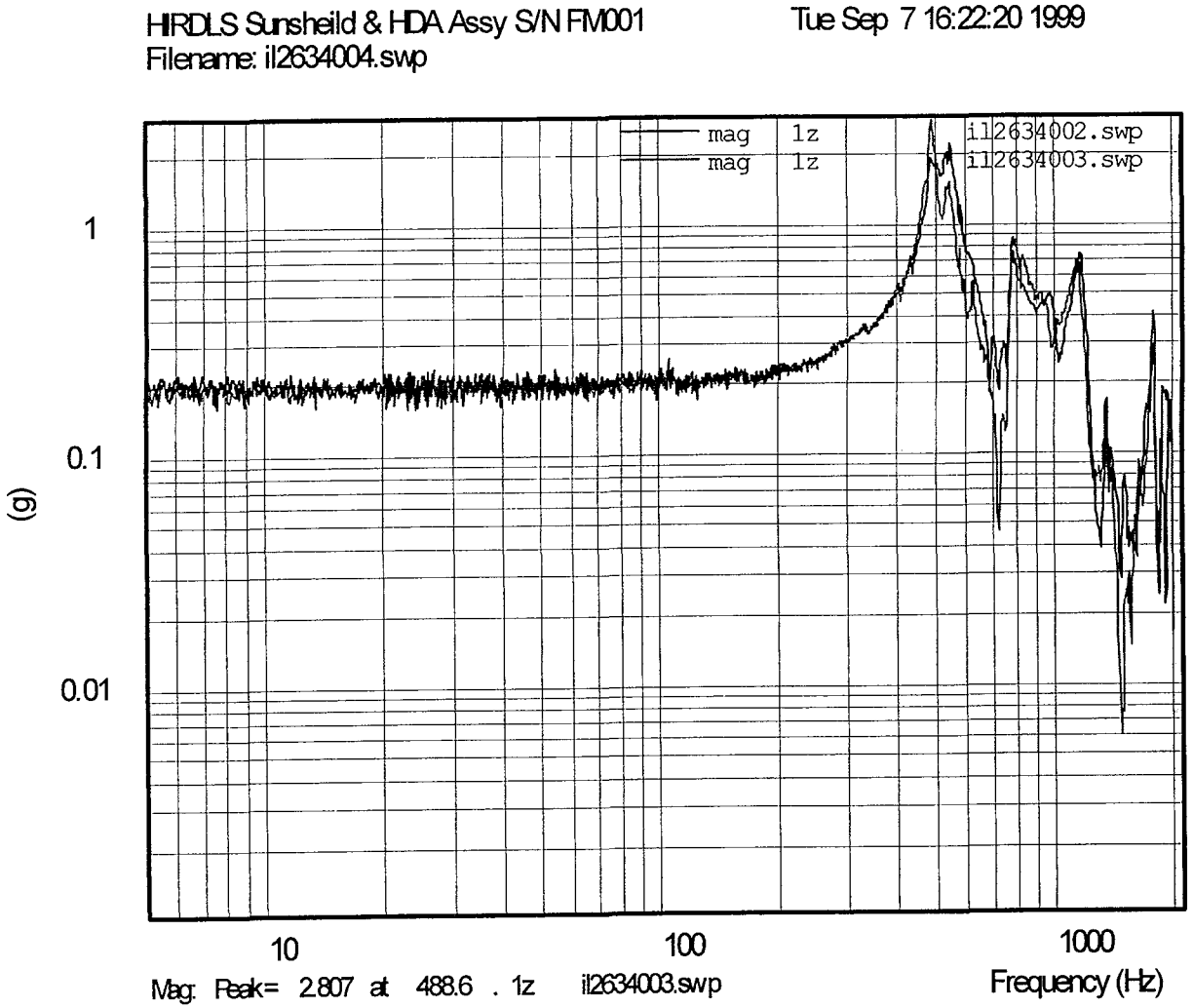

Figure 12 Pre and Post random test low level sine responses – Position 1z in-axis

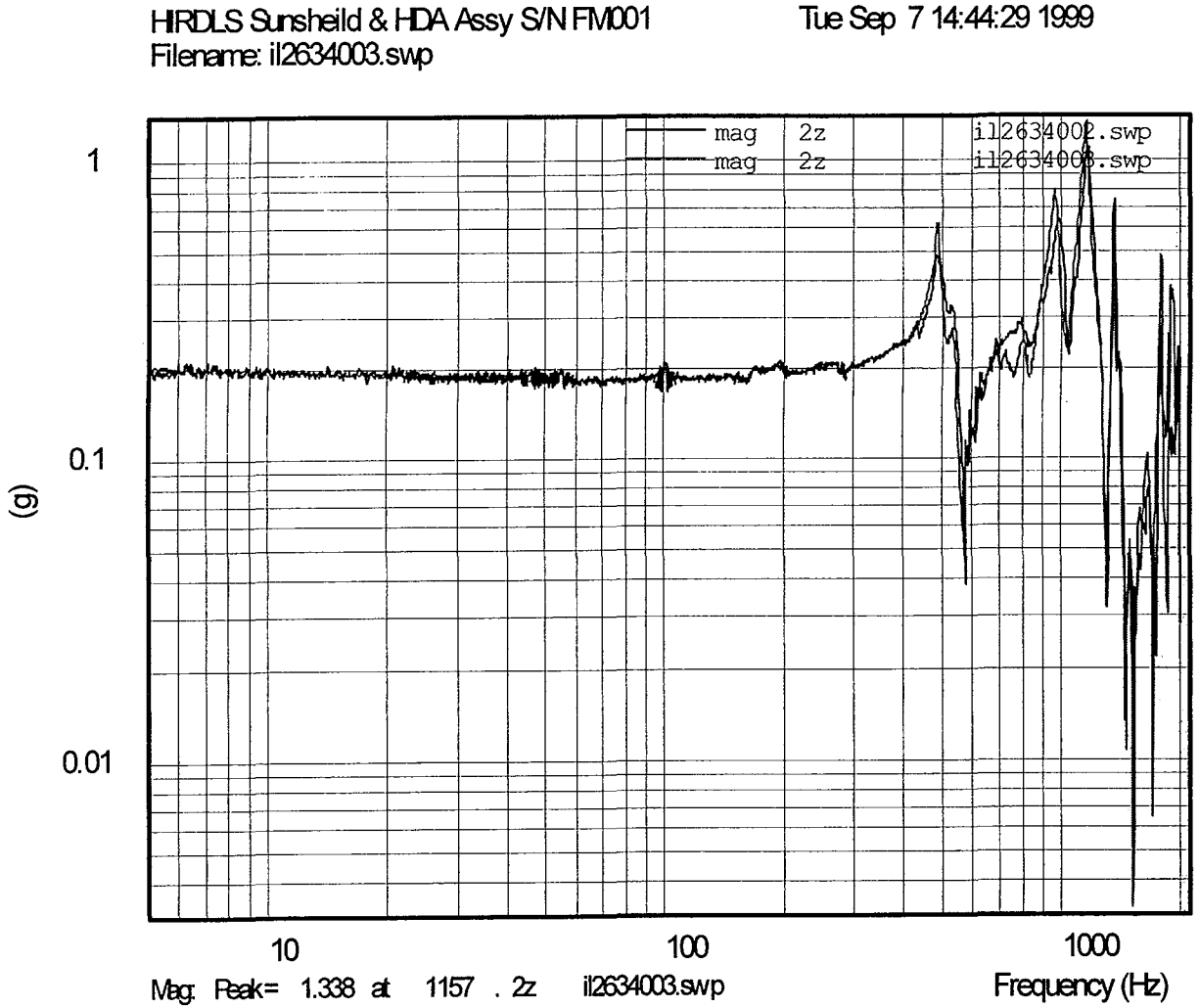

Figure 13 Pre and Post random test low level sine responses – Position 2z in-axis

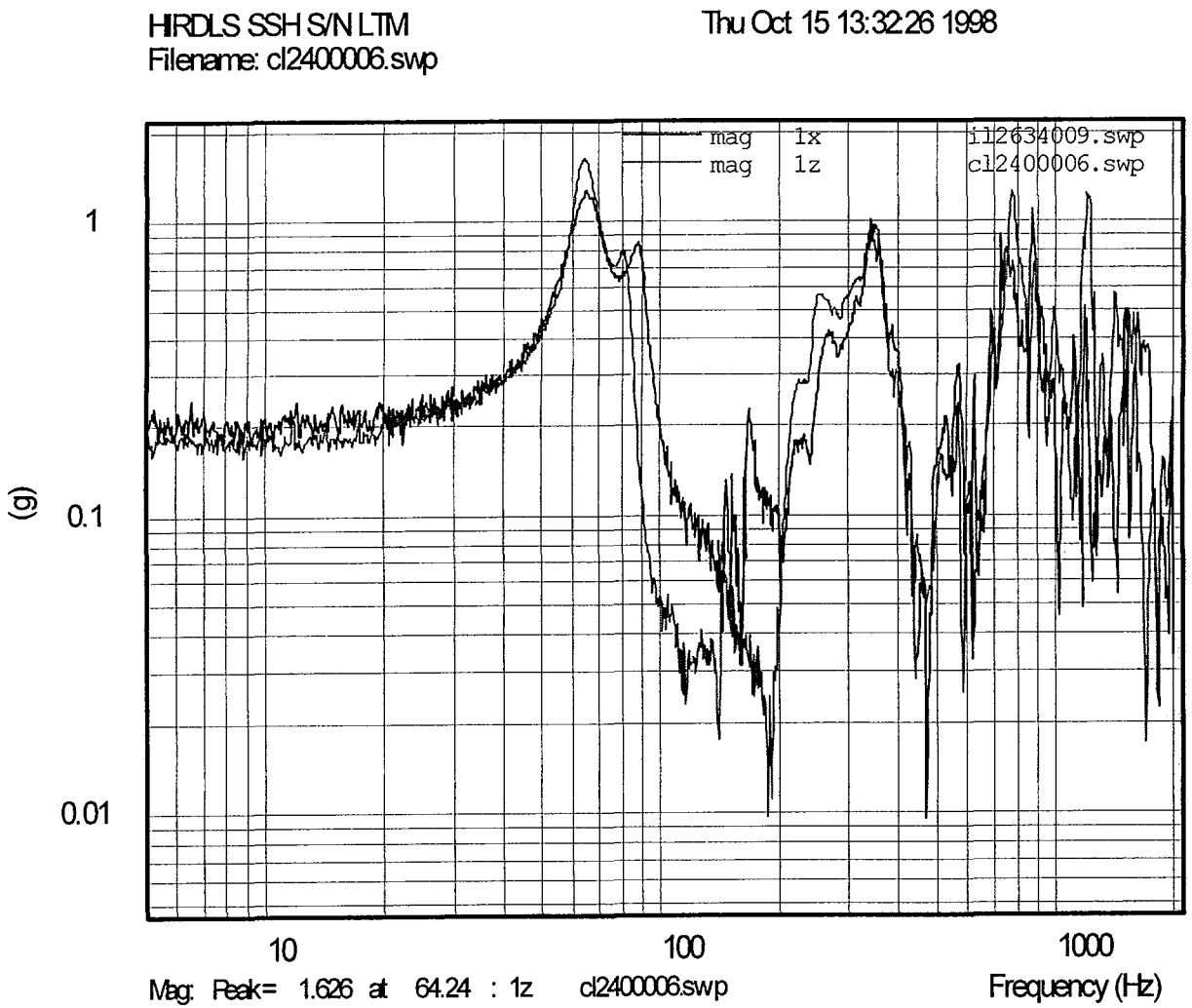

Figure 14 EM and FM low level sine responses - Position 1x in-axis

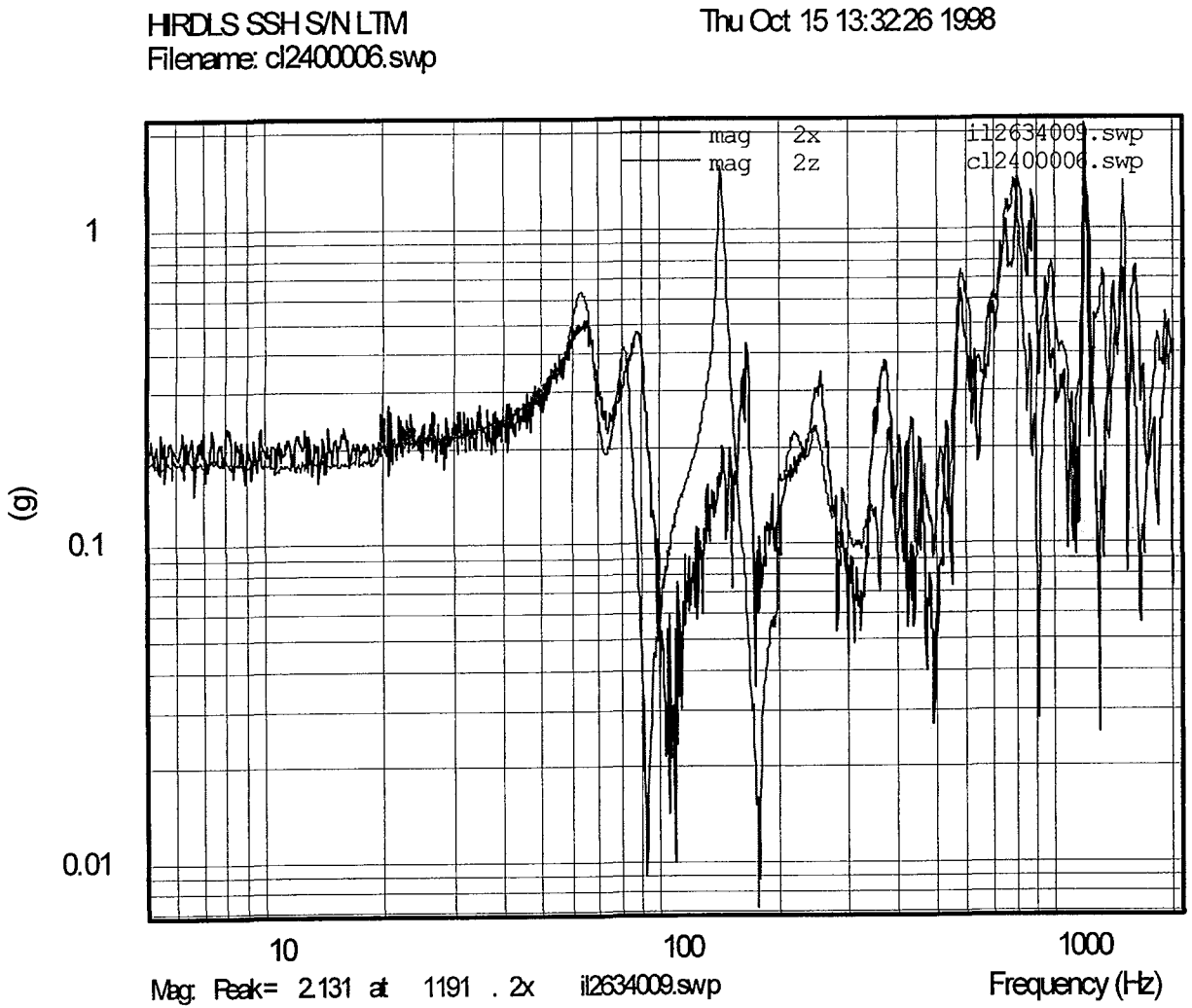

Figure 15 EM and FM low level sine responses - Position 2x in-axis

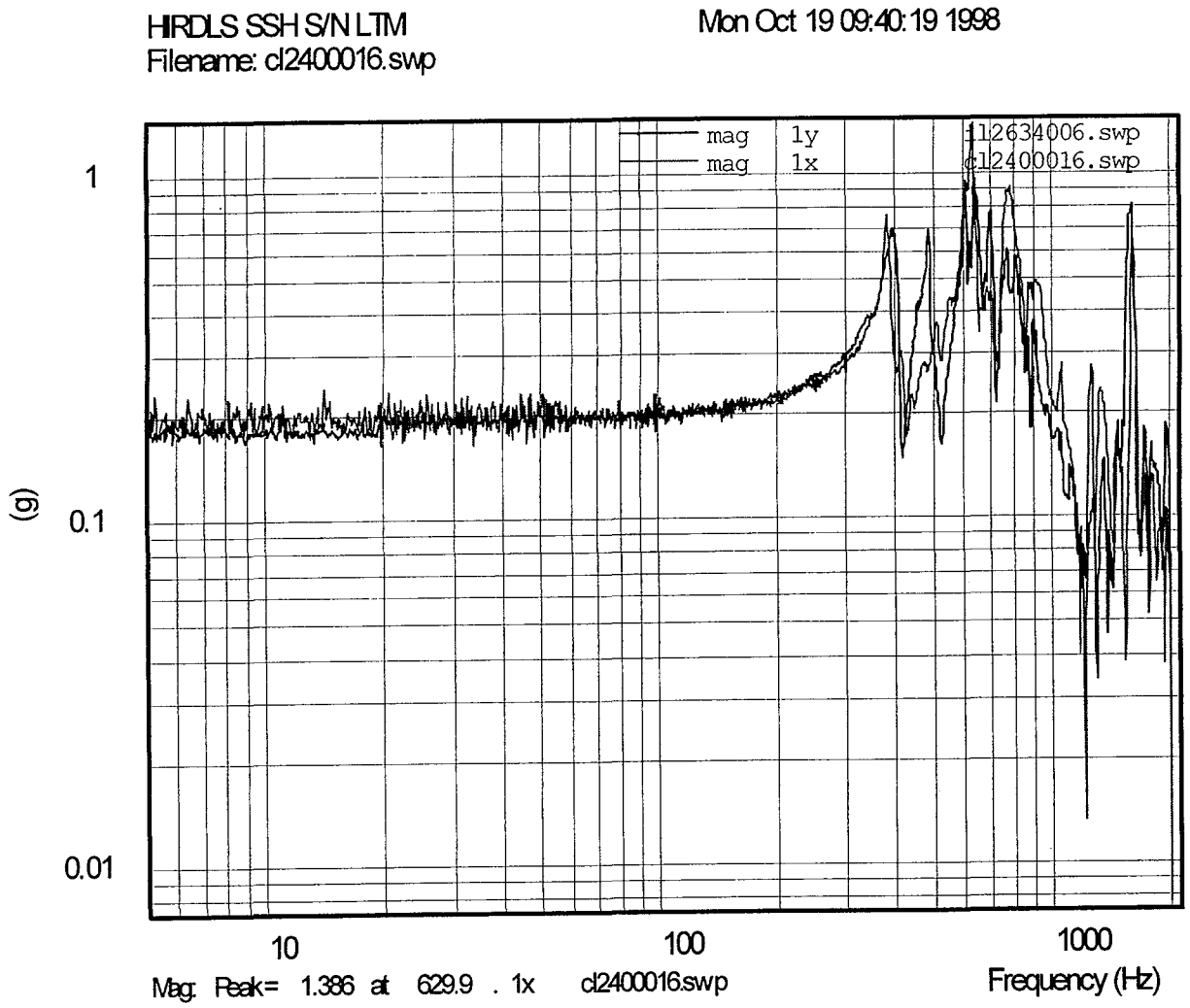

Figure 16 EM and FM low level sine responses - Position 1y in-axis

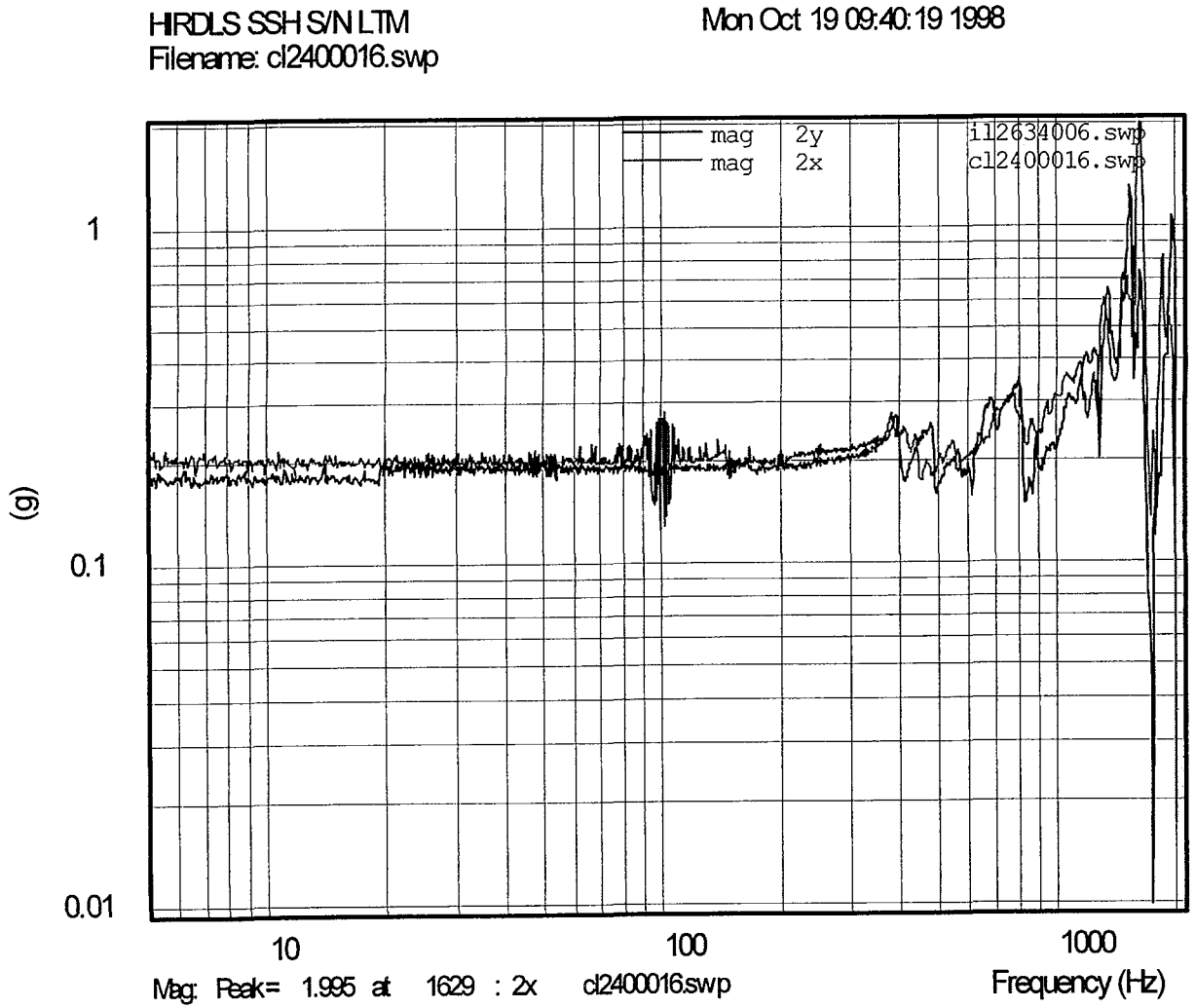

Figure 17 EM and FM low level sine responses - Position 2y in-axis

HIRDLS Sunsheild & HDA Assy S/N FM001 Tue Sep 7 14:44:29 1999
Filename: il2634003.swp

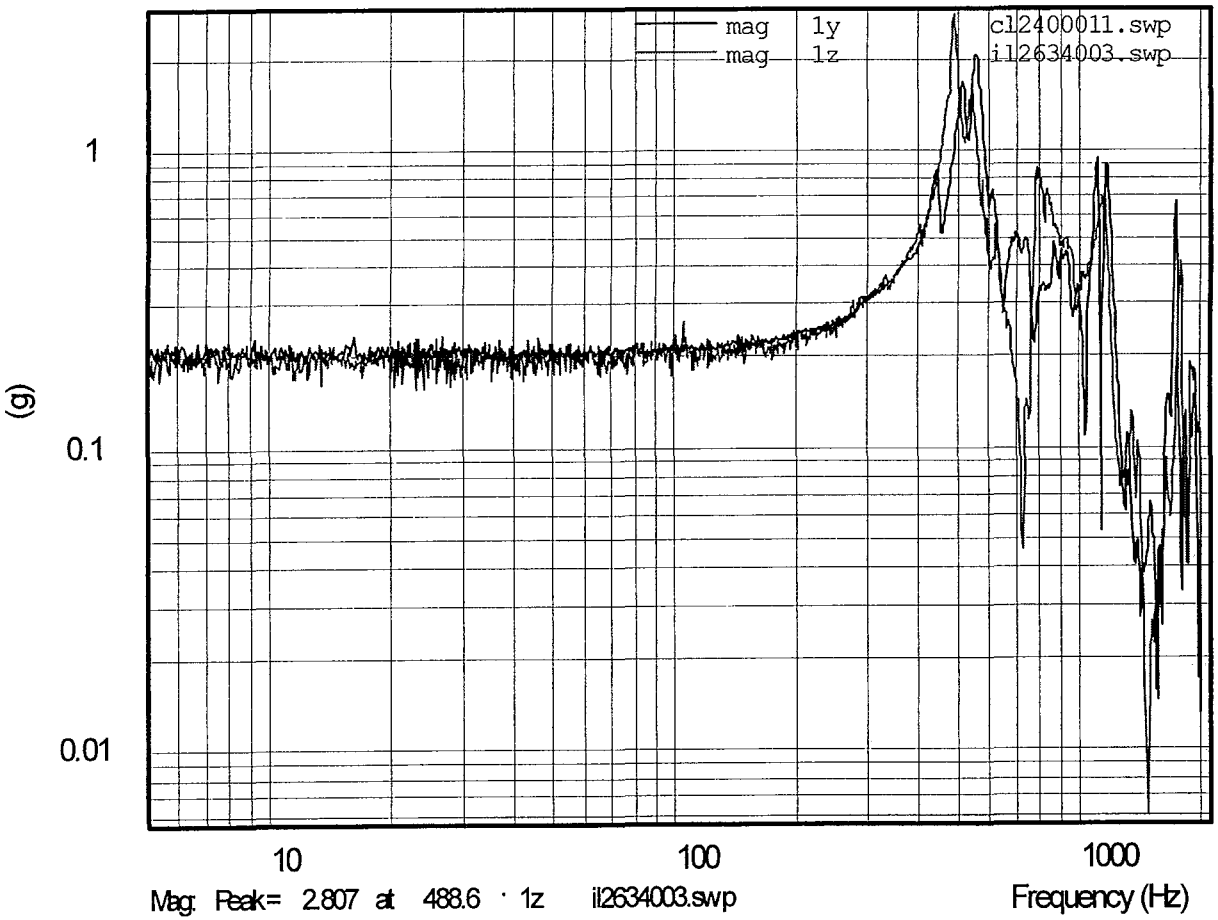

Figure 18 EM and FM low level sine responses - Position 1z in-axis

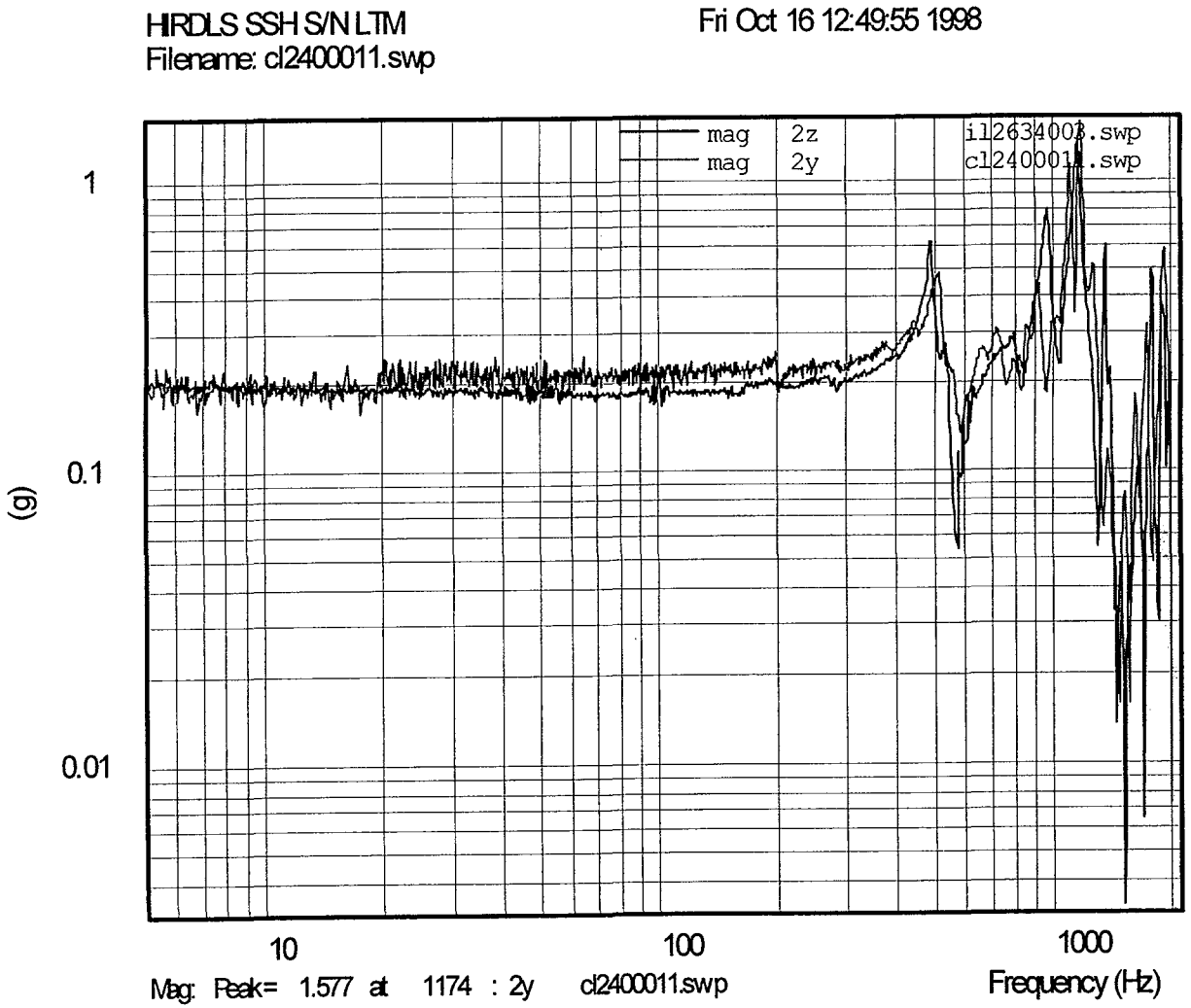

Figure 19 EM and FM low level sine responses - Position 2z in-axis

MATRA MARCONI SPACE

ENVIRONMENTAL ENGINEERING & TEST LABORATORY
Anchorage Road, Portsmouth, Hants PO3 5PU
Tel 01705 704510 Fax 01705 708278

NAMAS TESTING No 0093

TEST CERTIFICATE

ISSUED UNDER UKAS REGISTRATION No 0093 Serial No. IL2634-1

To	Matra Marconi Space (UK) Ltd HIRDLS F.A.O. N.Crossland (Ext 5409)	Customer Order No	N/A
Title	Acceptance Vibration of Sunshield and HDA Assembly		
Description/Identification of Test Item(s)	Drawing Number HR1L100, Issue 4		
Serial Number(s)	FM001		
Date of Receipt	6th September 1999		
Specification/Method/Procedure (& Issue)	3164-SA030-TPF, Issue 1		
Deviations from above	None by EVT		
Results/Observations	All testing carried out in accordance with test procedure All results held in EVT logbook IL2634		

The tests detailed above are certified to have been carried out to the requirements of the contract/order unless otherwise stated above. This certificate is issued in accordance with the quality control arrangements granted by our **UKAS TESTING** accreditation

AUTHOR B Wearn (MMS 122 UK) APPROVED BY S W Foster S W FORSTER
(Signature and print name)
FOR AND ON BEHALF OF THE
ENVIRONMENTAL TEST LABORATORY MANAGER

DATE: 9/9/99

Page 1 of 1

Registered office: The Grove, Warren Lane, Stanmore, Middlesex, HA7 4LY No 2519610

Figure 20 Environmental Test Certificate

DISTRIBUTION LIST

INTERNAL	EXTERNAL
N Crossland	N Morris (RAL)
I Stewart	
T Forward	
A Stewart	
R Coupe	
Project Library	

CHANGE RECORD

CHANGE NUMBER	CLASS	CHANGE DETAILS	ISSUE
3164- 00338	-	First Issue	1

SECTION 3

Test Certificates

MATRA MARCONI SPACE

ENVIRONMENTAL ENGINEERING & TEST LABORATORY
Anchorage Road, Portsmouth, Hants PO3 5PU
Tel 01705 704510 Fax 01705 708278

NAMAS
TESTING
No 0093

TEST CERTIFICATE

ISSUED UNDER UKAS REGISTRATION No: 0093 Serial No: IL2634-1

To:	Matra Marconi Space (UK) Ltd HIRDLS F A O N Crossland (Ext 5409)	**Customer Order No:**	N/A
Title:	Acceptance Vibration of Sunshield and HDA Assembly		
Description/Identification of Test Item(s):	Drawing Number HR1L100, Issue 4		
Serial Number(s):	FM001		
Date of Receipt:	6th September 1999		
Specification/Method/ Procedure (& Issue):	3164-SA030-TPF, Issue 1		
Deviations from above:	None by EVT		
Results/Observations:	All testing carried out in accordance with test procedure All results held in EVT logbook IL2634		

The tests detailed above are certified to have been carried out to the requirements of the contract/order unless otherwise stated above This certificate is issued in accordance with the quality control arrangements granted by our **UKAS TESTING** accreditation

AUTHOR B Wearn MMS 122 UK APPROVED BY S W Foster S W FORSTER
(Signature and print name)
FOR AND ON BEHALF OF THE
ENVIRONMENTAL TEST LABORATORY MANAGER

DATE: 9/9/99

Registered office The Grove, Warren Lane, Stanmore, Middlesex, HA7 4LY No 2519610

4

SECTION 4

Build Event Log

Part Number	ECL	RRL	Project / WBS
HR1L100	04	1	17143/533002

Item Description
SUNSHIELD & HDA ASSEMBLY

Work Order Number	Quantity	Release Date	Due Date
MFG0170717	1	20/07/1999	04/10/1999

Start Finish

Op No.	Work Centre	Mach No	Description	Stamp
20	43AITCR	MECH	ROUTE TO KANBAN STORE	
30	43AITCR	MECH	VISUAL INSPECT	
40	43AITCR	MECH	ASSEMBLE IN ACCORDANCE WITH RELEVANT WORK INSTRUC TION / DRAWING	
50	43AITCR	MECH	ASSEMBLE IN ACCORDANCE WITH RELEVANT WORK INSTRUC TION / DRAWING	

Part Number	ECL	RRL	Project / WBS
HR1L100	04	1	17143/533002

Item Description
SUNSHIELD & HDA ASSEMBLY

Work Order Number	Quantity	Release Date	Due Date
MFG0170717	1	20/07/1999	04/10/1999

Start Finish

Op No.	Work Centre	Mach.No.	Description	Stamp
60	43AITCR	MECH	VISUAL INSPECT (MECH) IAW WORK INSTRUTIONS/PROCED URE	
70	43AITCR	MECH	ASSEMBLE IN ACCORDANCE WITH RELEVANT WORK INSTRUC TION / DRAWING	
80	43AITCR	MECH	VISUAL INSPECT (MECH) IAW WORK INSTRUTIONS/PROCED URE	
90	43AITCR	MECH	FILLET LOCK/BOND IN ACCORDANCE WITH DRAWINGS/SPEC IFICATIONS	

Part Number	ECL	RRL	Project / WBS
HR1L100	04	1	17143/533002

Item Description
SUNSHIELD & HDA ASSEMBLY

Work Order Number	Quantity	Release Date	Due Date
MFG0170717	1	20/07/1999	04/10/1999

Start Finish

Op.No	Work Centre	Mach No.	Description	Stamp
100	43AITCR	MECH	VISUAL INSPECT (MECH) IAW WORK INSTRUTIONS/PROCEDURE	S
110	43AITCR	MECH	ASSEMBLE IN ACCORDANCE WITH RELEVANT WORK INSTRUCTION / DRAWING	S
120	43AITCR	MECH	VISUAL INSPECT (MECH) IAW WORK INSTRUTIONS/PROCEDURE	S
130	43AITCR	MECH	ASSEMBLE IN ACCORDANCE WITH RELEVANT WORK INSTRUCTION / DRAWING	S

Part Number	ECL	RRL	Project / WBS
HR1L100	04	1	17143/533002

Item Description
SUNSHIELD & HDA ASSEMBLY

Work Order Number	Quantity	Release Date	Due Date
MFG0170717	1	20/07/1999	04/10/1999

Start Finish

Op.No.	Work Centre	Mach.No	Description	Stamp
140	43AITCR	MECH	TORQUE IN ACCORDANCE WITH RELEVANT WORK INSTRUCTIONS/DRAWINGS	S
150	43AITCR	MECH	VISUAL INSPECT (MECH) IAW WORK INSTRUTIONS/PROCEDURE	S
160	43AITCR	MECH	ASSEMBLE IN ACCORDANCE WITH RELEVANT WORK INSTRUCTION / DRAWING	S
170	43AITCR	MECH	ASSEMBLE IN ACCORDANCE WITH RELEVANT WORK INSTRUCTION / DRAWING	S

Part Number	ECL	RRL	Project / WBS
HR1L100	04	1	17143/533002

Item Description
SUNSHIELD & HDA ASSEMBLY

Work Order Number	Quantity	Release Date	Due Date
MFG0170717	1	20/07/1999	04/10/1999

Start Finish

Op.No.	Work Centre	Mach No.	Description	Stamp
180	43AITCR	MECH	TORQUE IN ACCORDANCE WITH RELEVANT WORK INSTRUCTIONS/DRAWINGS	S
190	43AITCR	MECH	ASSEMBLE IN ACCORDANCE WITH RELEVANT WORK INSTRUCTION / DRAWING	S
200	43AITCR	MECH	VISUAL INSPECT (MECH) IAW WORK INSTRUTIONS/PROCEDURE	S
210	43AITCR	MECH	FILLET LOCK/BOND IN ACCORDANCE WITH DRAWINGS/SPECIFICATIONS	S

Part Number	ECL	RRL	Project / WBS
HR1L100	04	1	17143/533002

Item Description
SUNSHIELD & HDA ASSEMBLY

Work Order Number	Quantity	Release Date	Due Date
MFG0170717	1	20/07/1999	04/10/1999

Start Finish

Op No.	Work Centre	Mach No.	Description	Stamp
220	43AITCR	MECH	VISUAL INSPECT (MECH) IAW WORK INSTRUTIONS/PROCEDURE	S
225	43AITCR	MECH	ASSEMBLE IN ACCORDANCE WITH RELEVANT WORK INSTRUCTION / DRAWING	S
230	43AITCR	MECH	VISUAL INSPECT (MECH) IAW WORK INSTRUTIONS/PROCEDURE	S
240	43AITCR	MECH	ASSEMBLE IN ACCORDANCE WITH RELEVANT WORK INSTRUCTION / DRAWING	S

Part Number	ECL	RRL	Project / WBS
HR1L100	04	1	17143/533002

Item Description
SUNSHIELD & HDA ASSEMBLY

Work Order Number	Quantity	Release Date	Due Date
MFG0170717	1	20/07/1999	04/10/1999

Start Finish

Op No	Work Centre	Mach No	Description	Stamp
250	43AITCR	MECH	VISUAL INSPECT (MECH) IAW WORK INSTRUTIONS/PROCEDURE	
260	43AITCR	MECH	ASSEMBLE IN ACCORDANCE WITH RELEVANT WORK INSTRUCTION / DRAWING	
270	43AITCR	MECH	FILLET LOCK/BOND IN ACCORDANCE WITH DRAWINGS/SPECIFICATIONS	
280	43AITCR	MECH	ASSEMBLE IN ACCORDANCE WITH RELEVANT WORK INSTRUCTION / DRAWING	

Part Number	ECL	RRL	Project / WBS
HR1L100	04	1	17143/533002

Item Description
SUNSHIELD & HDA ASSEMBLY

Work Order Number	Quantity	Release Date	Due Date
MFG0170717	1	20/07/1999	04/10/1999

Start Finish

Op No.	Work Centre	Mach.No	Description	Stamp
290	43AITCR	MECH	ASSEMBLE IN ACCORDANCE WITH RELEVANT WORK INSTRUCTION / DRAWING	
300	430AITEI	NONE	AIT ELECTRICAL INTEGRATION I A.W. WORK INST	
310	430AITEI	NONE	AIT PRELIMINARY FRICTION TEST I A W WORK INSTRUCTION OP 310	
320	430AITEB	NONE	AIT ELECTRICAL BASELINE I A W WORK INSTRUCTION OP 320	

Part Number	ECL	RRL	Project / WBS
HR1L100	04	1	17143/533002

Item Description
SUNSHIELD & HDA ASSEMBLY

Work Order Number	Quantity	Release Date	Due Date
MFG0170717	1	20/07/1999	04/10/1999

Start Finish

Op No	Work Centre	Mach No	Description	Stamp
330	430AITPS	NONE	AIT PACK SSH ASSEMBLY I A.W WORK INSTRUCTION OP 330	
340	430AITPS	NONE	AIT SHIP SSH ASSEMBLY. I A.W.WORK INSTRUCTION OP 340.	
350	43AITCR	MECH	VISUAL INSPECT (MECH) IAW WORK INSTRUTIONS/PROCEDURE	
360	170ETVI	NONE	VIBRATION TEST	

Part Number	ECL	RRL	Project / WBS
HR1L100	04	1	17143/533002

Item Description
SUNSHIELD & HDA ASSEMBLY

Work Order Number	Quantity	Release Date	Due Date
MFG0170717	1	20/07/1999	04/10/1999

Start Finish

Op No	Work Centre	Mach No	Description	Stamp
370	430AITPS	NONE	AIT PACK SSH ASSEMBLY I A W WORK INSTRUCTION OP 370	S
380	430AITPS	NONE	AIT SHIP SSH ASSEMBLY I A.W.WORK INSTRUCTION OP 380.	S
390	43AITCR	MECH	VISUAL INSPECT (MECH) IAW WORK INSTRUTIONS/PROCEDURE	S
400	43AITCR	ELEC	POST VIBRATION TEST I A.W WORK INSTRUCTION	S

Part Number	ECL	RRL	Project / WBS
HR1L100	04	1	17143/533002

Item Description
SUNSHIELD & HDA ASSEMBLY

Work Order Number	Quantity	Release Date	Due Date
MFG0170717	1	20/07/1999	04/10/1999

Start Finish

Op No	Work Centre	Mach.No	Description	Stamp
410	430AITPS	NONE	AIT PACK SSH ASSEMBLY I.A W WORK INSTRUCTION OP 4 10	S
420	430AITPS	NONE	AIT SHIP SSH ASSEMBLY I A W WORK INSTRUCTION OP 4 20	S
430	43AITCR	MECH	VISUAL INSPECT (MECH) IAW WORK INSTRUTIONS/PROCED URE	S
440	430AITET	NONE	AIT THERMAL VAC TEST AT R A L I.A W.WORK INSTRU CTION OP 440.	S

Part Number	ECL	RRL	Project / WBS
HR1L100	04	1	17143/533002

Item Description
SUNSHIELD & HDA ASSEMBLY

Work Order Number	Quantity	Release Date	Due Date
MFG0170717	1	20/07/1999	04/10/1999

Start Finish

Op No	Work Centre	Mach No	Description	Stamp
450	430AITPS	NONE	AIT PACK SSH ASSEMBLY I A W.WORK INSTRUCTION OP 4 50	
460	430AITPS	NONE	AIT PACK SSH ASSEMBLY I A.W.WORK INSTRUCTION OP 4 60	
470	43AITCR	MECH	VISUAL INSPECT (MECH) IAW WORK INSTRUTIONS/PROCED URE	
480	43AITCR	MECH	ASSEMBLE IN ACCORDANCE WITH RELEVANT WORK INSTRUC TION / DRAWING	

Part Number	ECL	RRL	Project / WBS
HR1L100	04	1	17143/533002

Item Description
SUNSHIELD & HDA ASSEMBLY

Work Order Number	Quantity	Release Date	Due Date
MFG0170717	1	20/07/1999	04/10/1999

Start Finish

Op No.	Work Centre	Mach.No.	Description	Stamp
490	43AITCR	MECH	ASSEMBLE IN ACCORDANCE WITH RELEVANT WORK INSTRUCTION / DRAWING	S
500	43AITCR	ELEC	POST VIBRATION TEST I.A.W WORK INSTRUCTION	S
510	43AITCR	MECH	FINAL INSPECT JOB AND RELEVANT PAPERWORK	S

MATRA MARCONI SPACE	Project & Charge No: HIRDLS	RE Approval Stamp :

BOM No:	ECL No	Instruction Issue:	Routing revision level	Serial No:
HR1L100	04	1	1	FM

Works Order No:	Description	Title:
MFG0170717	SUNSHIELD / HDA ASSEMBLY	SUNSHIELD / HDA ASSEMBLY

ASSEMBLY INTEGRATION & TEST WORK INSTRUCTIONS

ISSUES OF CURRENT RELEVANT DOCUMENTATION AT ISSUE OF WORK INSTRUCTIONS

PRODUCT SPECIFIC DOCUMENTATION

DRAWING NUMBER	TITLE	ISS
HR1L100	Sunshield / Hda Assembly	002

PROJECT SPECIFIC INSTRUCTIONS

DRAWING NUMBER	TITLE	ISS
DW – MMS - 388	SSH ASSEMBLY PROCEDURE	2
TP-MMS-452 (3164-SA030-TPF)	SUNSHIELD ASSEMBLY FM TEST PROCEDURE	2

UNIT HAZARDS	PERSONNEL HAZARDS

A	B	C	D	E	F	G	H	I	J	K	L	M	N	O	P	Q	R	S	T	U	V	W	X	Y	Z

MATRA MARCONI SPACE	Project & Charge No: HIRDLS	RE Approval Stamp :

BOM No	ECL No	Instruction Issue.	Routing revision level	Serial No:
HR1L100	04	1	1	FM

Works Order No:	Description	Title:
MFG0170717	SUNSHIELD / HDA ASSEMBLY	SUNSHIELD / HDA ASSEMBLY

ASSEMBLY INSTRUCTION

WARNING

ENSURE THAT DUST COVERS ARE FITTED AT ALL TIMES TO FLIGHT HARDWARE.

GLOVES AND ANTISTATIC WRISTSTRAPS ARE TO BE WORN AT ALL TIMES WHILST IN THE CLEANROOM.

Operation Number	Operation Code	Work Centre	Discipline	Operation Complete	Witness / Inspect
10	Kit	230STORE			MMS 219 UK

Operation Details

Kit Marshall will be performed by stores prior to entering the clean room

Operation Number	Operation Code	Work Centre	Discipline	Operation Complete	Witness / Inspect
20	Kan	43AITCR	Mech		MMS 219 UK

Operation Details

Place Kit in Kanban store and create data pack

Operation Number	Operation Code	Work Centre	Discipline	Operation Complete	Witness / Inspect
30	Vinsp	43AITCR	Mech		MMS 219 UK

Operation Details

A visual inspection of the kit shall be performed prior to integration

MATRA MARCONI SPACE	Project & Charge No: HIRDLS	RE Approval Stamp

BOM No:	ECL No	Instruction Issue:	Routing revision level	Serial No
HR1L100	04	1	1	FM

Works Order No:	Description	Title:
MFG0170717	SUNSHIELD / HDA ASSEMBLY	SUNSHIELD / HDA ASSEMBLY

Operation Number	Operation Code	Work Centre	Discipline	Operation Complete	Witness / Inspect
40	Assy	43AITCR	Mech	S	MMS 219 UK

Operation Details

Prepare surfaces areas of Door Item 001, beneath Hinge Clevis Plates Items 004 & 005 and Latch Plate Item 010 with reference to DWG HR1L100 Note 19

Operation Number	Operation Code	Work Centre	Discipline	Operation Complete	Witness / Inspect
50	Assy	43AITCR	Mech	S	MMS 219 UK

Operation Details

Fit Hinge Clevis Plates Items 004 & 005 to Door Assy Item 001 and align Hinge Bores using Mandrel TAA2330
Torque Hinge Clevis Fixings Items 026 I A W DWG HR1L100 Note 2
Note : Fixing positions marked with ' * ' have a reduced torque

Operation Number	Operation Code	Work Centre	Discipline	Operation Complete	Witness / Inspect
60	Vinsp	43AITCR	Mech	S	MMS 219 UK

Operation Details

Inspect

Operation Number	Operation Code	Work Centre	Discipline	Operation Complete	Witness / Inspect
70	Assy	43AITCR	Mech	S	MMS 219 UK

Operation Details

Fit Latch Plate Item 010 in position, and assemble Vee Locator Item 011 to HDA Panel and leave fixings loose

MATRA MARCONI SPACE	Project & Charge No: HIRDLS	RE Approval Stamp

BOM No	ECL No	Instruction Issue.	Routing revision level	Serial No
HR1L100	04	1	1	FM

Works Order No:	Description	Title:
MFG0170717	SUNSHIELD / HDA ASSEMBLY	SUNSHIELD / HDA ASSEMBLY

Operation Number	Operation Code	Work Centre	Discipline	Operation Complete	Witness / Inspect
80	Vinsp	43AITCR	Mech		MMS 219 UK

Operation Details

Inspect

Operation Number	Operation Code	Work Centre	Discipline	Operation Complete	Witness / Inspect
90	Lock	43AITCR	Mech		MMS 219 UK

Operation Details

Bond TY Bases Item 042, Thermistors Item 061, Flexiform Grommet to exposed edges as Req'd to protect harness, and Sunsensor Assy in positions shown on DWG HR1L100 SHT 01 using Items 50, 51 & 52 I A W PS 2024 Mix ' 36'

Operation Number	Operation Code	Work Centre	Discipline	Operation Complete	Witness / Inspect
100	Vinsp	43AITCR	Mech		MMS 219 UK

Operation Details

Inspect

Operation Number	Operation Code	Work Centre	Discipline	Operation Complete	Witness / Inspect
110	Assy	43AITCR	Mech		MMS 219 UK

Operation Details

Offer HDA Panel to Fixture TAA2128 and verify that all panel side Cleat I/F Surfaces are in contact with the Fixture before securing fixings

Note : Shim maybe required in some positions (REF TAA2128 SHT 03)

MATRA MARCONI SPACE	Project & Charge No: HIRDLS	RE Approval Stamp

BOM No:	ECL No	Instruction Issue	Routing revision level	Serial No
HR1L100	04	1	1	FM

Works Order No:	Description	Title:
MFG0170717	SUNSHIELD / HDA ASSEMBLY	SUNSHIELD / HDA ASSEMBLY

Operation Number	Operation Code	Work Centre	Discipline	Operation Complete	Witness / Inspect
120	Vinsp	43AITCR	Mech		MMS 219 UK

Operation Details

Inspect

Operation Number	Operation Code	Work Centre	Discipline	Operation Complete	Witness / Inspect
130	Assy	43AITCR	Mech		MMS 219 UK

Operation Details

Disassemble temporary components from Hinge Assemblies Items 002 & 003
Loosely fit Hinge Assemblies Items 002 & 003 to Hinge Clevi Items 004 & 005
Fit Bearing Spacers and Hinge Pins

Operation Number	Operation Code	Work Centre	Discipline	Operation Complete	Witness / Inspect
140	Torque	43AITCR	Mech		MMS 219 UK

Operation Details

Torque Hinge Pin (motor assy) and Spool (potentiometer assy)

Operation Number	Operation Code	Work Centre	Discipline	Operation Complete	Witness / Inspect
150	Vinsp	43AITCR	Mech		MMS 219 UK

Operation Details

Inspect

MATRA MARCONI SPACE	Project & Charge No: HIRDLS	RE Approval Stamp .

BOM No	ECL No	Instruction Issue:	Routing revision level	Serial No
HR1L100	04	1	1	FM

Works Order No:	Description	Title:
MFG0170717	SUNSHIELD / HDA ASSEMBLY	SUNSHIELD / HDA ASSEMBLY

Operation Number	Operation Code	Work Centre	Discipline	Operation Complete	Witness / Inspect
160	Assy	43AITCR	Mech	S	MMS 219 UK

Operation Details

Set up 6 off Spacers 3 5 mm thick on HDA Panel at the outside of the Door Seal, 1 off at each corner and 2 off central
Note : setting Hinges & Vee Locators to this dimension determines the Seal compression

Operation Number	Operation Code	Work Centre	Discipline	Operation Complete	Witness / Inspect
170	Assy	43AITCR	Mech	S	MMS 219 UK

Operation Details

Offer Door and Hinge Assemblies to HDA Panel and verify alignment of Hinge Assy's with Studs and Vee locator position
Press down Door onto Spacers and determine shim required under Vee Locator Item 011 to achieve contact with Latch Vee Item 010 and under Hinge Assy's

Operation Number	Operation Code	Work Centre	Discipline	Operation Complete	Witness / Inspect
180	Torque	43AITCR	Mech	S	MMS 219 UK

Operation Details

Fit Shims and torque Vee Locator Item 011 and Hinge Assy's Items 002 & 003 I A W HR1L100 Note 2

Operation Number	Operation Code	Work Centre	Discipline	Operation Complete	Witness / Inspect
190	Assy	43AITCR	Mech	S	MMS 219 UK

Operation Details

Verify seal compression gaps are in the range of 3 0 / 3 5 mm

MATRA MARCONI SPACE	Project & Charge No: HIRDLS	RE Approval Stamp :

BOM No:	ECL No	Instruction Issue:	Routing revision level	Serial No:
HR1L100	04	1	1	FM

Works Order No:	Description	Title:
MFG0170717	SUNSHIELD / HDA ASSEMBLY	SUNSHIELD / HDA ASSEMBLY

Operation Number	Operation Code	Work Centre	Discipline	Operation Complete	Witness / Inspect
200	Vinsp	43AITCR	Mech	S	MMS 219 UK

Operation Details

Inspect

Operation Number	Operation Code	Work Centre	Discipline	Operation Complete	Witness / Inspect
210	Lock	43AITCR	Mech	S	MMS 219 UK

Operation Details

Pot Vee Locator Item 011 and Latch Item 010 I A W HR1L100 Note 5

Operation Number	Operation Code	Work Centre	Discipline	Operation Complete	Witness / Inspect
220	Vinsp	43AITCR	Mech	S	MMS 219 UK

Operation Details

inspect

Operation Number	Operation Code	Work Centre	Discipline	Operation Complete	Witness / Inspect
225	Assy	43AITCR	Mech	S	MMS 219 UK

Operation Details

Complete Potentiometer and Motor Hinge Assemblies

MATRA MARCONI SPACE	Project & Charge No: HIRDLS	RE Approval Stamp

BOM No:	ECL No	Instruction Issue.	Routing revision level	Serial No
HR1L100	04	1	1	FM

Works Order No:	Description	Title:
MFG0170717	SUNSHIELD / HDA ASSEMBLY	SUNSHIELD / HDA ASSEMBLY

Operation Number	Operation Code	Work Centre	Discipline	Operation Complete	Witness / Inspect
230	Vinsp	43AITCR	Mech	S	MMS 219 UK

Operation Details

Inspect

Operation Number	Operation Code	Work Centre	Discipline	Operation Complete	Witness / Inspect
240	Assy	43AITCR	Mech	S	MMS 219 UK

Operation Details

Set Microswitch located on Motor Hinge Assembly to operate when actuator lever comes in to contact with microswitch backstop Ref DWG HR1L100 SHT 3
Adjust Door Screw Stop to limit opening angle to 123 ° / 122 ° I A W HR1L100 SHT 3
Torque Lock Nuts on Microswitch and DoorStop I A W Note 2 and fillet lock I A W Note 4

Operation Number	Operation Code	Work Centre	Discipline	Operation Complete	Witness / Inspect
250	Vinsp	43AITCR	Mech	S	MMS 219 UK

Operation Details

Inspect

Operation Number	Operation Code	Work Centre	Discipline	Operation Complete	Witness / Inspect
260	Assy	43AITCR	Mech	S	MMS 219 UK

Operation Details

Prepare surfaces of Items 015 & 016 for bonding I A W Note 13

MATRA MARCONI SPACE	Project & Charge No: HIRDLS	RE Approval Stamp

BOM No.	ECL No	Instruction Issue	Routing revision level	Serial No
HR1L100	04	1	1	FM

Works Order No:	Description	Title:
MFG0170717	SUNSHIELD / HDA ASSEMBLY	SUNSHIELD / HDA ASSEMBLY

Operation Number	Operation Code	Work Centre	Discipline	Operation Complete	Witness / Inspect
270	Lock	43AITCR	Mech	S	MMS 219 UK

Operation Details

Bond Items 016 & 017 using Items 050, 051 and 052 I A W PS 2024 mix ' 36 '

Operation Number	Operation Code	Work Centre	Discipline	Operation Complete	Witness / Inspect
280	Assy	43AITCR	Mech	S	MMS 219 UK

Operation Details

Integrate Hold Down Release Mechanism with reference to HR1L100 Note 15 and Torque fixings I A W Note 2, fillet lock I A W Note 4

Operation Number	Operation Code	Work Centre	Discipline	Operation Complete	Witness / Inspect
290	Assy	43AITCR	Elec	S	MMS 219 UK

Operation Details

Wire Harness to connectors as shown on DWG HR1L100 SHT 04 and I A W Notes 10, 11, 12, 14, 17, 18, and 20

Operation Number	Operation Code	Work Centre	Discipline	Operation Complete	Witness / Inspect
300	AITEI	430AITEI		S	MMS 219 UK

Operation Details

Perform preliminary Electrical Tests I A W TP-MMS-452 (3164-SA030-TPF) Section 4 1 3 Record results on Pin Survey Document

MATRA MARCONI SPACE	Project & Charge No: HIRDLS	RE Approval Stamp

BOM No.	ECL No	Instruction Issue	Routing revision level	Serial No
HR1L100	04	1	1	FM

Works Order No:	Description	Title:
MFG0170717	SUNSHIELD / HDA ASSEMBLY	SUNSHIELD / HDA ASSEMBLY

Operation Number	Operation Code	Work Centre	Discipline	Operation Complete	Witness / Inspect
310	AITEI	430AITEI		S	MMS 219 UK

Operation Details

Perform preliminary and friction tests as detailed in TP-MMS-452 (3164-SA030-TPF) Sections 4 1, 4 1 1, 4 1 2

Operation Number	Operation Code	Work Centre	Discipline	Operation Complete	Witness / Inspect
320	AITEB	430AITEB		S	MMS 219 UK

Operation Details

Perform Baseline Functional Test I A W (3164-SA030-TPF) Section 4 2

Operation Number	Operation Code	Work Centre	Discipline	Operation Complete	Witness / Inspect
330	AITPS	430AITPS		S	MMS 219 UK

Operation Details

Flight pack SSH Assembly, double bag including desiccant and back fill with White Spot Nitrogen, ensure that G shock and Humidity Indicators are attached to the SSH Handling Fixture

Operation Number	Operation Code	Work Centre	Discipline	Operation Complete	Witness / Inspect
340	AITPS	430AITPS	Mech	S	MMS 219 UK

Operation Details

Ship boxed SSH to EVT

MATRA MARCONI SPACE	Project & Charge No: HIRDLS	RE Approval Stamp .

BOM No:	ECL No	Instruction Issue	Routing revision level	Serial No:
HR1L100	04	1	1	FM

Works Order No:	Description	Title:
MFG0170717	SUNSHIELD / HDA ASSEMBLY	SUNSHIELD / HDA ASSEMBLY

Operation Number	Operation Code	Work Centre	Discipline	Operation Complete	Witness / Inspect
350	Vinsp	43AITCR	Mech		MMS 219 UK

Operation Details

Unpack assembly in EVT laminar flow tent A visual inspection of the SSH shall be performed and a check to verify the G shock indicator and Humidity Indicators are OK

Operation Number	Operation Code	Work Centre	Discipline	Operation Complete	Witness / Inspect
360	VI01	170EVTI			MMS 219 UK

Operation Details

Support EVT in Vibration Test as Detailed in TP-MMS-452 (2164-SA030-TPF) Section 4 4

Operation Number	Operation Code	Work Centre	Discipline	Operation Complete	Witness / Inspect
370	AITPS	430AITPS			MMS 219 UK

Operation Details

Flight pack SSH Assembly, double bag including desiccant and back fill with White Spot Nitrogen, ensure that G shock and Humidity Indicators are attached to the SSH Handling Fixture

Operation Number	Operation Code	Work Centre	Discipline	Operation Complete	Witness / Inspect
380	AITPS	430AITPS	Mech		MMS 219 UK

Operation Details

Ship boxed SSH to BLDG 48 HIRDLS cleanroom

MATRA MARCONI SPACE	Project & Charge No: HIRDLS	RE Approval Stamp

BOM No	ECL No	Instruction Issue	Routing revision level	Serial No
HR1L100	04	1	1	FM

Works Order No:	Description	Title:
MFG0170717	SUNSHIELD / HDA ASSEMBLY	SUNSHIELD / HDA ASSEMBLY

Operation Number	Operation Code	Work Centre	Discipline	Operation Complete	Witness / Inspect
390	Vinsp	43AITCR	Mech	S	MMS 219 UK

Operation Details

Unpack assembly in a class 100,000 cleanroom A visual inspection of the SSH shall be performed and a check to verify the G shock indicator and Humidity Indicators are OK

Operation Number	Operation Code	Work Centre	Discipline	Operation Complete	Witness / Inspect
400	AITPVT	43AITCR	Elec	S	MMS 219 UK

Operation Details

Perform Post Vibration Functional Test I A W TP-MMS-452 (3164-SA030-TPF) Section 4 5

Operation Number	Operation Code	Work Centre	Discipline	Operation Complete	Witness / Inspect
410	AITPS	430AITPS	Mech	S	MMS 219 UK

Operation Details

Flight pack SSH Assembly, double bag including desiccant and back fill with White Spot Nitrogen, ensure that G shock and Humidity Indicators are attached to the SSH Handling Fixture

Operation Number	Operation Code	Work Centre	Discipline	Operation Complete	Witness / Inspect
420	AITPS	430AITPS	Mech	S	MMS 219 UK

Operation Details

Ship boxed SSH to RAL

MATRA MARCONI SPACE	Project & Charge No: HIRDLS	RE Approval Stamp

BOM No	ECL No	Instruction Issue	Routing revision level	Serial No:
HR1L100	04	1	1	FM

Works Order No:	Description	Title:
MFG0170717	SUNSHIELD / HDA ASSEMBLY	SUNSHIELD / HDA ASSEMBLY

Operation Number	Operation Code	Work Centre	Discipline	Operation Complete	Witness / Inspect
430	Vinsp	43AITCR	Mech	S	MMS 219 UK

Operation Details

Unpack assembly in a class 100,000 cleanroom A visual inspection of the SSH shall be performed and a check to verify the G shock indicator and Humidity Indicators are OK

Operation Number	Operation Code	Work Centre	Discipline	Operation Complete	Witness / Inspect
440	AITET	430AITET	Elec	S	MMS 219 UK

Operation Details

Perform thermal Vac test I A W the Sunshield Assembly FM Test Procedure TP-MMS-452 (3164-SA030-TPF)
All results to be entered into this document

Operation Number	Operation Code	Work Centre	Discipline	Operation Complete	Witness / Inspect
450	AITPS	430AITPS	Mech	S	MMS 219 UK

Operation Details

Flight pack SSH Assembly, double bag including desiccant and back fill with White Spot Nitrogen, ensure that G shock and Humidity Indicators are attached to the SSH Handling Fixture

Operation Number	Operation Code	Work Centre	Discipline	Operation Complete	Witness / Inspect
460	AITPS	430AITPS	Mech	S	MMS 219 UK

Operation Details

Ship boxed SSH to MMS Portsmouth

MATRA MARCONI SPACE	Project & Charge No: HIRDLS	RE Approval Stamp .

BOM No	ECL No	Instruction Issue	Routing revision level	Serial No:
HR1L100	04	1	1	FM

Works Order No:	Description	Title:
MFG0170717	SUNSHIELD / HDA ASSEMBLY	SUNSHIELD / HDA ASSEMBLY

Operation Number	Operation Code	Work Centre	Discipline	Operation Complete	Witness / Inspect
470	Vinsp	43AITCR	Mech		MMS 219 UK

Operation Details

Unpack assembly in a class 100,000 cleanroom A visual inspection of the SSH shall be performed and a check to verify the G shock indicator and Humidity Indicators are OK

Operation Number	Operation Code	Work Centre	Discipline	Operation Complete	Witness / Inspect
480	Assy	43AITCR	Mech		MMS 219 UK

Operation Details

Remove SSH Assy from handling fixture, weigh and record mass

Mass 2846 g

Operation Number	Operation Code	Work Centre	Discipline	Operation Complete	Witness / Inspect
490	Assy	43AITCR	Mech		MMS 219 UK

Operation Details

Integrate SSH Assembly to STH structure I A W relevant Drawing

Operation Number	Operation Code	Work Centre	Discipline	Operation Complete	Witness / Inspect
500	AITPVT	43AITCR	Elec		MMS 219 UK

Operation Details

Perform Post Vibration Functional Test with SSH assembled to STH structure I A W (3164-SA030-TPF) Section 4 8

MATRA MARCONI SPACE	Project & Charge No: HIRDLS	RE Approval Stamp

BOM No	ECL No	Instruction Issue:	Routing revision level	Serial No:
HR1L100	04	1	1	FM

Works Order No:	Description	Title:
MFG0170717	SUNSHIELD / HDA ASSEMBLY	SUNSHIELD / HDA ASSEMBLY

Operation Number	Operation Code	Work Centre	Discipline	Operation Complete	Witness / Inspect
505	CLEAN	43AITCR	Mech	S	MMS 219 UK

Operation Details

Clean assembly I A W PS2058 Grade 2X

Weigh and Record 2846 g

Bag and Label I A W ES601 Method 27

Operation Number	Operation Code	Work Centre	Discipline	Operation Complete	Witness / Inspect
510	Finsp	43AITCR	Mech	S	MMS 219 UK

Operation Details

Final Inspect assembly and all relevant paperwork and route data pack to Bldg 43 top floor

MATRA MARCONI SPACE	Project & Charge No: HIRDLS	RE Approval Stamp

BOM No.	ECL No	Instruction Issue:	Routing revision level	Serial No
HR1L100	04	1	1	FM

Works Order No:	Description	Title:
MFG0170717	SUNSHIELD / HDA ASSEMBLY	SUNSHIELD / HDA ASSEMBLY

MIX RECORD

OP No	Mix Number	Mix Type	Batch Number	Used Against	User's Stamp
90	5227	EPIKOTE	PM19091/1		S
	5230	VERSAMID	PM24712/1/F		
		SILICA	GZ363676		
210	5228	EPIKOTE	PM19091/1		S
		VERSAMID	PM24712/1/F		
		SILICA	GZ363676		
270	5230	EPIKOTE	PM19091/1		S
		VERSAMID	PM24712/1/F		
		SILICA	GZ363676		
240	P00920	EPIKOTE	PM19091/1	USED TO FILLET LOCK ALL MICROSWITCH	S
		VERSAMID	PM24712/1/F	FIXINGS	
				ASS/ BASE FIXINGS & EARTH STUD	
				NUTS FILLET LOCKED	
				USED TO FILLET LOCK SPOOL AND	
				HINGE PIN.	

MATRA MARCONI SPACE	Project & Charge No: HIRDLS	RE Approval Stamp

BOM No	ECL No	Instruction Issue:	Routing revision level	Serial No
HR1L100	04	1	1	FM

Works Order No:	Description	Title:
MFG0170717	SUNSHIELD / HDA ASSEMBLY	SUNSHIELD / HDA ASSEMBLY

AS REQUIRED RECORD

ITEM	BATCH NUMBER

MATRA MARCONI SPACE	Project & Charge No: HIRDLS	RE Approval Stamp

BOM No:	ECL No	Instruction Issue:	Routing revision level	Serial No:
HR1L100	04	1	1	FM

Works Order No:	Description	Title:
MFG0170717	SUNSHIELD / HDA ASSEMBLY	SUNSHIELD / HDA ASSEMBLY

INCIDENT AND OBSERVATION RECORD

Op No	NCR No	INCIDENT	STAMP	DATE

Part Number	ECL	RRL	Project / WBS
HR1L024	05	1	17143/533002

Item Description
HOLD DOWN REALEASE MECH.ASSY

Work Order Number	Quantity	Release Date	Due Date
MFG0168194	1	06/06/1999	06/06/1999

Start Finish

Op.No.	Work Centre	Mach.No.	Description	Stamp
10	230STORE	NONE	KIT MARSHALL	
20	43AITCR	MECH	ROUTE TO KANBAN STORE.	
30	43AITCR	MECH	VISUAL INSPECT	
40	43AITCR	MECH	CLEAN IN ACCORDANCE WITH RELEVANT SPECIFICATION.	
50	43AITCR	MECH	VISUAL INSPECT	
60	43AITCR	MECH	ASSEMBLE IN ACCORDANCE WITH RELEVANT WORK INSTRUC TION / DRAWING	
70	43AITCR	MECH	VISUAL INSPECT	
80	43AITCR	MECH	ASSEMBLE IN ACCORDANCE WITH RELEVANT WORK INSTRUC TION / DRAWING	

Part Number	ECL	RRL	Project / WBS
HR1L024	05	1	17143/533002

Item Description
HOLD DOWN REALEASE MECH.ASSY

Work Order Number	Quantity	Release Date	Due Date
MFG0168194	1	06/06/1999	06/06/1999

Start Finish

Op.No.	Work Centre	Mach.No	Description	Stamp
90	43AITCR	MECH	CLEAN IN ACCORDANCE WITH RELEVANT SPECIFICATION.	
100	43AITCR	MECH	VISUAL INSPECT	
110	43AITCR	MECH	ASSEMBLE IN ACCORDANCE WITH RELEVANT WORK INSTRUCTION / DRAWING	
130	43AITCR	MECH	FILLET LOCK/BOND IN ACCORDANCE WITH DRAWINGS/SPECIFICATIONS	
140	43AITCR	MECH	VISUAL INSPECT	
150	43AITCR	MECH	ASSEMBLE IN ACCORDANCE WITH RELEVANT WORK INSTRUCTION / DRAWING	
160	43AITCR	MECH	ASSEMBLE IN ACCORDANCE WITH RELEVANT WORK INSTRUCTION / DRAWING	
170	43AITCR	MECH	VISUAL INSPECT	

Part Number	ECL	RRL	Project / WBS
HR1L024	05	1	17143/533002

Item Description
HOLD DOWN REALEASE MECH.ASSY

Work Order Number	Quantity	Release Date	Due Date
MFG0168194	1	06/06/1999	06/06/1999

Start Finish

Op.No.	Work Centre	Mach.No.	Description	Stamp
180	43AITCR	MECH	ASSEMBLE IN ACCORDANCE WITH RELEVANT WORK INSTRUCTION / DRAWING	
190	43AITCR	MECH	VISUAL INSPECT	
200	43AITCR	MECH	ASSEMBLE IN ACCORDANCE WITH RELEVANT WORK INSTRUCTION / DRAWING	
210	43AITCR	MECH	FILLET LOCK/BOND IN ACCORDANCE WITH DRAWINGS/SPECIFICATIONS	
220	43AITCR	MECH	VISUAL INSPECT	
230	43AITCR	MECH	ASSEMBLE IN ACCORDANCE WITH RELEVANT WORK INSTRUCTION / DRAWING	
240	43AITCR	MECH	VISUAL INSPECT	
250	43AITCR	MECH	ASSEMBLE IN ACCORDANCE WITH RELEVANT WORK INSTRUCTION / DRAWING	

Part Number	ECL	RRL	Project / WBS
HR1L024	05	1	17143/533002

Item Description
HOLD DOWN REALEASE MECH.ASSY

Work Order Number	Quantity	Release Date	Due Date
MFG0168194	1	06/06/1999	06/06/1999

Start Finish

Op.No.	Work Centre	Mach.No	Description	Stamp
260	43AITCR	MECH	VISUAL INSPECT	
270	43AITCR	MECH	ASSEMBLE IN ACCORDANCE WITH RELEVANT WORK INSTRUCTION / DRAWING	
280	43AITCR	MECH	TORQUE IN ACCORDANCE WITH RELEVANT WORK INSTRUCTIONS/DRAWINGS	
290	43AITCR	MECH	VISUAL INSPECT	
300	43AITCR	MECH	FILLET LOCK/BOND IN ACCORDANCE WITH DRAWINGS/SPECIFICATIONS	
310	43AITCR	MECH	ASSEMBLE IN ACCORDANCE WITH RELEVANT WORK INSTRUCTION / DRAWING	
320	43AITCR	MECH	VISUAL INSPECT	
330	43AITCR	MECH	ASSEMBLE IN ACCORDANCE WITH RELEVANT WORK INSTRUCTION / DRAWING	

Part Number	ECL	RRL	Project / WBS
HR1L024	05	1	17143/533002

Item Description
HOLD DOWN REALEASE MECH.ASSY

Work Order Number	Quantity	Release Date	Due Date
MFG0168194	1	06/06/1999	06/06/1999

Start Finish

Op.No.	Work Centre	Mach.No.	Description	Stamp
340	43AITCR	MECH	FILLET LOCK/BOND IN ACCORDANCE WITH DRAWINGS/SPEC IFICATIONS	
350	43AITCR	MECH	ASSEMBLE IN ACCORDANCE WITH RELEVANT WORK INSTRUC TION / DRAWING	
360	43AITCR	MECH	VISUAL INSPECT	
370	43AITCR	MECH	ASSEMBLE IN ACCORDANCE WITH RELEVANT WORK INSTRUC TION / DRAWING	
380	43AITCR	MECH	TORQUE IN ACCORDANCE WITH RELEVANT WORK INSTRUCTI ONS/DRAWINGS	
390	43AITCR	MECH	ASSEMBLE IN ACCORDANCE WITH RELEVANT WORK INSTRUC TION / DRAWING	
400	43AITCR	MECH	VISUAL INSPECT	
410	43AITCR	MECH	CLEAN IN ACCORDANCE WITH RELEVANT SPECIFICATION.	

Part Number	ECL	RRL	Project / WBS
HR1L024	05	1	17143/533002

Item Description
HOLD DOWN REALEASE MECH.ASSY

Work Order Number	Quantity	Release Date	Due Date
MFG0168194	1	06/06/1999	06/06/1999

Start Finish

Op.No.	Work Centre	Mach.No.	Description	Stamp
420	43AITCR	MECH	VISUAL INSPECT	
430	43AITCR	MECH	FINAL INSPECT JOB AND RELEVANT PAPERWORK	

MATRA MARCONI SPACE	Project & Charge No: HIRDLS	RE Approval Stamp

BOM No:	ECL No	Instruction Issue	Routing revision level	Serial No
HR1L024	05	1	1	FM

Works Order No:	Description	Title:
MFG0168194	SUNSHIELD & HDA ASSEMBLY	HDRM ASSEMBLY

ASSEMBLY INTEGRATION & TEST WORK INSTRUCTIONS

ISSUES OF CURRENT RELEVANT DOCUMENTATION AT ISSUE OF WORK INSTRUCTIONS

PRODUCT SPECIFIC DOCUMENTATION

DRAWING NUMBER	TITLE	ISS
HR1L024	Hold Down Release Mechanism Assembly	2

PROJECT SPECIFIC INSTRUCTIONS

DRAWING NUMBER	TITLE	ISS
3164-SA001-DA1	SSH Assembly Procedure	1

UNIT HAZARDS	PERSONNEL HAZARDS

A	B	C	D	E	F	G	H	I	J	K	L	M	N	O	P	Q	R	S	T	U	V	W	X	Y	Z

MATRA MARCONI SPACE	Project & Charge No: HIRDLS	RE Approval Stamp

BOM No:	ECL No	Instruction Issue:	Routing revision level	Serial No
HR1L024	05	1	1	FM

Works Order No:	Description	Title:
MFG0168194	SUNSHIELD & HDA ASSEMBLY	HDRM ASSEMBLY

ASSEMBLY INSTRUCTION

WARNING

ENSURE THAT DUST COVERS ARE FITTED AT ALL TIMES TO FLIGHT HARDWARE.

GLOVES AND ANTISTATIC WRISTSTRAPS ARE TO BE WORN AT ALL TIMES WHILST IN THE CLEANROOM.

Operation Number	Operation Code	Work Centre	Discipline	Operation Complete	Witness / Inspect
10	KIT	230STORE			

Operation Details

Kit marshall will be performed by stores prior to entering the clean room

Operation Number	Operation Code	Work Centre	Discipline	Operation Complete	Witness / Inspect
20	KAN	43AITCR	Mech		

Operation Details

Place Kit in Kanban store and create data pack

Operation Number	Operation Code	Work Centre	Discipline	Operation Complete	Witness / Inspect
30	VINSP	43AITCR	Mech		

Operation Details

A visual inspection of the kit shall be performed prior to integration

MATRA MARCONI SPACE	Project & Charge No: HIRDLS	RE Approval Stamp :

BOM No:	ECL No	Instruction Issue:	Routing revision level	Serial No:
HR1L024	05	1	1	FM

Works Order No:	Description	Title:
MFG0168194	SUNSHIELD & HDA ASSEMBLY	HDRM ASSEMBLY

Operation Number	Operation Code	Work Centre	Discipline	Operation Complete	Witness / Inspect
40	CLEAN	43AITCR	Mech	S	

Operation Details

Prior to assembly of HDRM Assembly all parts to be cleaned I A W DRG HR1L024 REQ'S
All parts to be weighed and recorded in Incident & Observation Record

Operation Number	Operation Code	Work Centre	Discipline	Operation Complete	Witness / Inspect
50	VINSP	43AITCR	Mech	S	

Operation Details

Inspect

Operation Number	Operation Code	Work Centre	Discipline	Operation Complete	Witness / Inspect
60	ASSY	43AITCR	Elec	S	

Operation Details

Assemble Shaft Tip Item 012 and Shaft End Item 007 to Shaft Item 009 (Finger tight)
Lock threads using Epikote 828 Versamid 140 I A W DRG HR1L024 Note 3
Mix is to be recorded in Mix Record and sample Tested for hardness

Operation Number	Operation Code	Work Centre	Discipline	Operation Complete	Witness / Inspect
70	VINSP	43AITCR	Mech	S	

Operation Details

Inspect

MATRA MARCONI SPACE	Project & Charge No: HIRDLS	RE Approval Stamp

BOM No:	ECL No	Instruction Issue	Routing revision level	Serial No:
HR1L024	05	1	1	FM

Works Order No:	Description	Title:
MFG0168194	SUNSHIELD & HDA ASSEMBLY	HDRM ASSEMBLY

Operation Number	Operation Code	Work Centre	Discipline	Operation Complete	Witness / Inspect
80	ASSY	43AITCR	Mech	S	

Operation Details

Insert Spigot Item 005 into hole of Lever Item 002 as shown on DRG HR1L024 Section ' ZZ '
Drill and Ream through Lever and Spigot to suit Item 057 I A W HR1L024 Note 4

Operation Number	Operation Code	Work Centre	Discipline	Operation Complete	Witness / Inspect
90	CLEAN	43AITCR	Mech	S	

Operation Details

Remove burrs and clean I A W PS2058

Operation Number	Operation Code	Work Centre	Discipline	Operation Complete	Witness / Inspect
100	VINSP	43AITCR	Mech	S	

Operation Details

Inspect

Operation Number	Operation Code	Work Centre	Discipline	Operation Complete	Witness / Inspect
110	ASSY	43AITCR	Mech	S	

Operation Details

Press fit Spring Retainer Item 021 into Lever Item 002 & centralise Item 021
Bond Item 021 to Item 002 I A W DRG HR1L024 Note 6 and PS2024 Mix ' 36 '
Mix is to be recorded in Mix Record and sample Tested for hardness

MATRA MARCONI SPACE	Project & Charge No: HIRDLS	RE Approval Stamp :

BOM No	ECL No	Instruction Issue:	Routing revision level	Serial No
HR1L024	05	1	1	FM

Works Order No:	Description	Title:
MFG0168194	SUNSHIELD & HDA ASSEMBLY	HDRM ASSEMBLY

Operation Number	Operation Code	Work Centre	Discipline	Operation Complete	Witness / Inspect
130	ASSY	43AITCR	Mech		

Operation Details

Press Dowel Item 055 into Lever Item 002 to Achieve 10 5mm Dimension REF DRG HR1L024
Apply fillet of adhesive at both ends of Dowel I A W PS2024 Mix ' 36 '
Mix is to be recorded in Mix Record and sample Tested for hardness

Operation Number	Operation Code	Work Centre	Discipline	Operation Complete	Witness / Inspect
140	VINSP	43AITCR	Mech		

Operation Details

Inspect

Operation Number	Operation Code	Work Centre	Discipline	Operation Complete	Witness / Inspect
150	ASSY	43AITCR	Mech		

Operation Details

Press Bearing Item 044 into Mounting Bracket Item 001 REF DRG HR1L024 Section ' ZZ '

Operation Number	Operation Code	Work Centre	Discipline	Operation Complete	Witness / Inspect
160	ASSY	43AITCR	Mech		

Operation Details

Press Plain Bearing 2 off Item 045 into Mounting Bracket Item 001 REF DRG HR1L024

MATRA MARCONI SPACE	Project & Charge No: HIRDLS	RE Approval Stamp :

BOM No	ECL No	Instruction Issue:	Routing revision level	Serial No
HR1L024	05	1	1	FM

Works Order No:	Description	Title:
MFG0168194	SUNSHIELD & HDA ASSEMBLY	HDRM ASSEMBLY

Operation Number	Operation Code	Work Centre	Discipline	Operation Complete	Witness / Inspect
170	VINSP	43AITCR	Mech		

Operation Details

Inspect

Operation Number	Operation Code	Work Centre	Discipline	Operation Complete	Witness / Inspect
180	ASSY	43AITCR	Mech		

Operation Details

Cover Mounting Bracket Item 001 & Spring Retainer Item 003 with SHELDAHL Tape Item 40 with REF To HR1L024 Sheet 2

Operation Number	Operation Code	Work Centre	Discipline	Operation Complete	Witness / Inspect
190	VINSP	43AITCR	Mech		

Operation Details

Inspect

Operation Number	Operation Code	Work Centre	Discipline	Operation Complete	Witness / Inspect
200	ASSY	43AITCR	Mech		

Operation Details

Clamp Spring Catch Item 013 to Catch Retainer Item 014, Drill Thro' Item 014 using Pilot Hole in Item 013 to a DIA 3 3 / 3 2mm
Deburr & Clean

MATRA MARCONI SPACE	Project & Charge No: HIRDLS	RE Approval Stamp :

BOM No:	ECL No	Instruction Issue:	Routing revision level	Serial No:
HR1L024	05	1	1	FM

Works Order No:	Description	Title:
MFG0168194	SUNSHIELD & HDA ASSEMBLY	HDRM ASSEMBLY

Operation Number	Operation Code	Work Centre	Discipline	Operation Complete	Witness / Inspect
210	LOCK	43AITCR	Mech		

Operation Details

Prepare surfaces and Bond Items 013 & 014 I A W PS2024 Mix ' 36 ' Mix is to be recorded in Mix Record and sample Tested for hardness
Rivet Items 013 & 014 using Rivet Item 060, I A W PS2039

Operation Number	Operation Code	Work Centre	Discipline	Operation Complete	Witness / Inspect
220	VINSP	43AITCR	Mech		

Operation Details

Inspect

Operation Number	Operation Code	Work Centre	Discipline	Operation Complete	Witness / Inspect
230	ASSY	43AITCR	Mech		

Operation Details

Fit Roller Bearing Item 046, Bearing Retainer Item 008 and Nut Item 031, to end of Lever Item 002
Torque Nut Item 031 to 0 5NM I A W DRG HR1L024 Note 2
Lock Nut Item 031 I A W PS2039 Mix ' 36 ' Mix is to be recorded in Mix Record and sample Tested for hardness

Operation Number	Operation Code	Work Centre	Discipline	Operation Complete	Witness / Inspect
240	VINSP	43AITCR	Mech		

Operation Details

Inspect

MATRA MARCONI SPACE	Project & Charge No: HIRDLS	RE Approval Stamp

BOM No	ECL No	Instruction Issue:	Routing revision level	Serial No:
HR1L024	05	1	1	FM

Works Order No:	Description	Title:
MFG0168194	SUNSHIELD & HDA ASSEMBLY	HDRM ASSEMBLY

Operation Number	Operation Code	Work Centre	Discipline	Operation Complete	Witness / Inspect
250	ASSY	43AITCR	Mech		

Operation Details

Fit Limit Switch Stop Screws Item 006 & Nut Item 029, in 2 off positions in Lever Item 002 and 2 off positions in Mounting Bracket Item 001
Fit Microswitch Item 50 and Actators Items 051 & 052 using Items 025, 029, 034, and 035 I A W DRG HR1L024

Operation Number	Operation Code	Work Centre	Discipline	Operation Complete	Witness / Inspect
260	VINSP	43AITCR	Mech		

Operation Details

Inspect

Operation Number	Operation Code	Work Centre	Discipline	Operation Complete	Witness / Inspect
270	ASSY	43AITCR	Mech		

Operation Details

Fit Torsion Springs Items 018 & 019 to both sides of Lever Item 002
Manipulate Lever Assembly into Mounting Bracket Item 001, allow the Lever spindle to protrude thro' the upper BearingHousing Retain Lever position by inserting a 5 0 mm thick Packer under the Lower Face & insert 4 9 mm DIA Location Pin in Lower Plain Bearing
Assemble Conrad Bearing Item 043, to Lever spindle, clamp Inner Race of Bearing Item 004 with Items 026 & 038

MATRA MARCONI SPACE	Project & Charge No: HIRDLS	RE Approval Stamp :

BOM No:	ECL No	Instruction Issue:	Routing revision level	Serial No:
HR1L024	05	1	1	FM

Works Order No:	Description	Title:
MFG0168194	SUNSHIELD & HDA ASSEMBLY	HDRM ASSEMBLY

Operation Number	Operation Code	Work Centre	Discipline	Operation Complete	Witness / Inspect
280	TORQUE	43AITCR	Mech		

Operation Details

Torque Screw Item 038 to 2 5 NM

Operation Number	Operation Code	Work Centre	Discipline	Operation Complete	Witness / Inspect
290	VINSP	43AITCR	Mech		

Operation Details

Inspect

Operation Number	Operation Code	Work Centre	Discipline	Operation Complete	Witness / Inspect
300	LOCK	43AITCR	Mech		

Operation Details

Lock Items 026 & 038 using Epikote 828 Versamid 140 I A W PS2024 Mix ' 36 ' Mix is to be recorded in Mix Record and sample Tested for hardness

Operation Number	Operation Code	Work Centre	Discipline	Operation Complete	Witness / Inspect
310	ASSY	43AITCR	Mech		

Operation Details

Remove 5 0 mm Packer & engage Bearing Item 004 Outer Race until Race is in contact with shoulder
Remove 4 9 mm Location Pin and insert Spigot Item 005, align Reamed holes and Drive in Dowel Item 057

MATRA MARCONI SPACE	Project & Charge No: HIRDLS	RE Approval Stamp

BOM No	ECL No	Instruction Issue:	Routing revision level	Serial No:
HR1L024	05	1	1	FM

Works Order No:	Description	Title:
MFG0168194	SUNSHIELD & HDA ASSEMBLY	HDRM ASSEMBLY

Operation Number	Operation Code	Work Centre	Discipline	Operation Complete	Witness / Inspect
320	VINSP	43AITCR	Mech		

Operation Details

Inspect

Operation Number	Operation Code	Work Centre	Discipline	Operation Complete	Witness / Inspect
330	ASSY	43AITCR	Mech		

Operation Details

Fit Waved Washer Item 016 & Spring Retainer Item 003 Verifying that gap under Retainer is 1 5 mm before securing with 4 off Screws Items 036

Operation Number	Operation Code	Work Centre	Discipline	Operation Complete	Witness / Inspect
340	LOCK	43AITCR	Mech		

Operation Details

Torque 4 off Screws Items 036 I A W DRG HR1024 Note 2
Lock Items 026 & 038 using Epikote 828 Versamid 140 I A W PS2024 Mix ' 36 ' Mix is to be recorded in Mix Record and sample Tested for hardness

Operation Number	Operation Code	Work Centre	Discipline	Operation Complete	Witness / Inspect
350	ASSY	43AITCR	Mech		

Operation Details

Fit Shaft Assembly Item 009 into Plain Bearings Items 045 verifying force to slide Shaft in Bearings < 2 N

MATRA MARCONI SPACE	Project & Charge No: HIRDLS	RE Approval Stamp

BOM No.	ECL No	Instruction Issue	Routing revision level	Serial No
HR1L024	05	1	1	FM

Works Order No:	Description	Title:
MFG0168194	SUNSHIELD & HDA ASSEMBLY	HDRM ASSEMBLY

Operation Number	Operation Code	Work Centre	Discipline	Operation Complete	Witness / Inspect
360	VINSP	43AITCR	Mech		

Operation Details

Inspect

Operation Number	Operation Code	Work Centre	Discipline	Operation Complete	Witness / Inspect
370	ASSY	43AITCR	Mech		

Operation Details

Set Microswitch Stops I A W SSH Assembly Procedure 3164 – SA001 – DA1 Section 4 3 and 4 4

Operation Number	Operation Code	Work Centre	Discipline	Operation Complete	Witness / Inspect
380	TORQUE	43AITCR	Mech		

Operation Details

Torque HOP Actuator (Item 020) 2 off fixings I A W DRG HR1L024 Note 2 and verify Gap between Actuator Operating End Face and Shaft is 0 1 / 0 15 mm

Operation Number	Operation Code	Work Centre	Discipline	Operation Complete	Witness / Inspect
390	ASSY	43AITCR	Mech		

Operation Details

Integrate Spring Catch Retainer Item 013 & 014 and Spring Restraint Bracket Item 023 torque fixings with reference to Note 2, set position to maintain latch fully open, ensure that the micro switches are set correctly and verify operation of Catch

MATRA MARCONI SPACE	Project & Charge No: HIRDLS	RE Approval Stamp :

BOM No:	ECL No	Instruction Issue:	Routing revision level	Serial No
HR1L024	05	1	1	FM

Works Order No:	Description	Title:
MFG0168194	SUNSHIELD & HDA ASSEMBLY	HDRM ASSEMBLY

Operation Number	Operation Code	Work Centre	Discipline	Operation Complete	Witness / Inspect
400	VINSP	43AITCR	Mech		

Operation Details

Inspect

Operation Number	Operation Code	Work Centre	Discipline	Operation Complete	Witness / Inspect
410	CLEAN	43AITCR	Mech		

Operation Details

Clean assembly I A W PS2058 Grade 2X

Weigh and Record 253 g

Bag and Label I A W ES601 Method 27

Operation Number	Operation Code	Work Centre	Discipline	Operation Complete	Witness / Inspect
420	VINSP	43AITCR	Mech		

Operation Details

Inspect

Operation Number	Operation Code	Work Centre	Discipline	Operation Complete	Witness / Inspect
430	FINSP	43AITCR	Mech		

Operation Details

Final inspect assembly and all relevant paperwork

MATRA MARCONI SPACE	Project & Charge No: HIRDLS	RE Approval Stamp .

BOM No:	ECL No	Instruction Issue:	Routing revision level	Serial No:
HR1L024	05	1	1	FM

Works Order No:	Description	Title:
MFG0168194	SUNSHIELD & HDA ASSEMBLY	HDRM ASSEMBLY

MIX RECORD

OP No	Mix Number	Mix Type	Batch Number	Used Against	User's Stamp
60	5211	EPIKOTE	PM16156/1/F		S
110		VERSAMID	PM24712/1/F		
		SILICA	GZ2363679		
130	5212	EPIKOTE	PM16156/1/F		S
230		VERSAMID	PM24712/1/F		
		SILICA	GZ2363679		
210	5225	EPIKOTE	PM19091/1		S
		VERSAMID	PM24712/1/F		
		SILICA	GZ2363679		
300	5226	EPIKOTE	PM19091/1		S
340		VERSAMID	PM24712/1/F		
		SILICA	GZ2363679		

MATRA MARCONI SPACE	Project & Charge No: HIRDLS	RE Approval Stamp :

BOM No:	ECL No	Instruction Issue:	Routing revision level	Serial No:
HR1L024	05	1	1	FM

Works Order No:	Description	Title:
MFG0168194	SUNSHIELD & HDA ASSEMBLY	HDRM ASSEMBLY

AS REQUIRED RECORD

ITEM	BATCH NUMBER

MATRA MARCONI SPACE	Project & Charge No: HIRDLS	RE Approval Stamp

BOM No:	ECL No	Instruction Issue:	Routing revision level	Serial No
HR1L024	05	1	1	FM

Works Order No:	Description	Title:
MFG0168194	SUNSHIELD & HDA ASSEMBLY	HDRM ASSEMBLY

INCIDENT AND OBSERVATION RECORD

Op No	NCR No	INCIDENT	STAMP	DATE

SECTION 4

Test Event Log

EVT PORTSMOUTH

Matra Marconi Space

Test Request Form

NAMAS TESTING No. 0093

	Job No: [redacted]	IL 2634.
Name of Unit	**Type/Drg. and Issue No.**	**Unit Serial No.**
Sunshield & HDA Assembly	HR1L100 Issue 04	FM001
Manufacturer	**Resource - Project/ Customer**	**Project/ Charge No.**
MMS	HIRDLS Project	17143 543001
Test Specification / Issue	**Batch Ref. No.**	**Static Sensitive**
3164-SA030-TPF Issue 1 (TP-MMS-452)	MFG0170717	Yes: ☐ No: ✓

Type of Test		**Functional Testing**		**Occurrence Report procedure (yes / no)**
Eng. Development		Before / After	✓	
Qual/Design Approval		During EVT		yes
Protoflight		To be done by		
Acceptance / Flight	✓	AIT		
Special				

Additional Information (timescales, special conditions etc.)

Perform vibration testing in 3 axes in accordance with Test Procedure referred to above Relevant extracts of this procedure have previously been forwarded to Brian Wearn

Vibration jig (Drg No. TAA2124) is currently held by EVT but may require re-assembly following rework Again Brian Wearn has assembly details Jig interface is compatible with large (4" pitch) vibrator

Unit is currently being built and will require baseline functional testing prior to vibration Realistic estimated start date is **Monday 16 August** although we will strive to deliver to EVT towards the end of the previous week

AIT (Steve Yardley) to supervise unit installation and turn-around between axes (unit needs to be disassembled from jig during turn-around)

Project Manager (notify before testing)	**Quality Representative**	**Technical Liaison**
Ian Stewart	Alan Foot	Nigel Crossland
Tel 4950	Tel 4637	Tel 5409
Test Requestor	**Accepted**	**Type of Report**
Nigel Crossland	Lab Manager R.C. SQUIRES	Signed TRF ☐ Test House Cert ✓ Full Report ☐
Date	**Date**	
3 August 1999	- 3 AUG 1999	

This job is now closed and records are available in the EVT logbook. All work carried out under the auspices of NAMAS accreditation held by this test house (0093).

Checked by	**Certified by**
B. Wearn (MMS 122 UK)	R C Squires Lab Manager
Date 9/9/99	Date

Sheet Ref: C 1

Job Ref:No: [redacted] IL2634.

CHANGE/ADDITIONS SHEET

Entry No	Change/Additions to Requirement	Authority	Name Signature & Date

Sheet Ref: C2

Job Ref:No: [redacted] IL2634.

CHANGE/ADDITIONS SHEET

Entry No	Change/Additions to Requirement	Authority	Name Signature & Date

Sheet Ref: E1

Job Ref No: [redacted] IL 2634

EQUIPMENT LOG SHEET

Equipment Description	Equipment Type	Serial Number	Calibration Recal Date	Date & Stamp
Controller	SD 1201	21618		
Controller	SD 1700 (Javelin)	29666		
Controller	SD 2552B(1)	2932-7764-01	12/9/99	
Controller	SD 2552B(2)	2932-7785		
Protector 1	TAP-1000	361		
Protector 2	TAP-1000	360		
Data Analyser				
CDS1	M 6000	D 118002		
CDS2	EDASP 7610	68679	18/11/99	
Safety Accelerometer				
Ling L980	Endevco 226C			
Ling L964	Endevco 226C			
VP2500	Endevco 226C			
VP1200	Endevco 226C			
Tape Recorder	RACAL V Store	25368		
Strain Gauge Conditioning				
Power Supply	2110A	NSN		
Module 1	2120A	101720		
Module 2	2120A	116766		
Module 3	2120A	116345		
Module 4	2120A	116346		
Module 5	2120A	101773		

4. VIBRATION CHECK LIST

Immediately before running the vibrator, check the following:

1 Vibrator

a) Trunnion bolts TIGHT

2 Accelerometer

a) Leads to BOOM correct as per logbook
b) Lead connections TIGHT

3 Logbook

a) Vibrator ORIENTATION certified in Logbook
b) Vibration FIXTURE assembly TORQUE certified in logbook
c) UNIT assembly TORQUES recorded in logbook
c) Jig/unit DIAGRAM drawn in logbook
d) Accelerometer INSTALLATION certified in logbook

4 Charge Amplifiers

a) Boom to charge amplifier INPUTS correct as per logbook
b) Charge sensitivity RANGE correct as per logbook
c) Charge sensitivity SETTING (pC/g) correct as per logbook
d) Accelerometer SIGNAL GAIN (Mech units/volt) appropriate for the test level
e) TIME CONSTANT correct:
"medium" for < 10 pC/g
"short" for > 10 pC/g
f) Charge amplifiers CYCLED "operate - reset - operate"

6 Vibration Controller

a) Maximum OUTPUT VOLTAGE correct (100 mV normal)
b) TOLERANCE LINES as specified in test procedure
c) ABORT limits and lines appropriate
d) LOOP CHECK parameters OK
e) Controller SAFETY features OK
f) MILLIVOLTS per "g" the same as the Charge Amplifiers
g) Check program operation in "CLOSED LOOP"

7 Controller connections

a) CONTROL CHANNELS connected to controller inputs
b) Controller output to correct AMPLIFIER

8 Vibration Analyser

a) Charge amplifier to analyser LEADS correct as per logbook
b) Channel GAIN and IDENTIFICATIONS correct
c) TUNING LEAD from correct controller

9 Final

a) IF IN DOUBT GET SOMEONE ELSE TO CHECK
b) Stamp and date logbook "V.C.L.O.K" i.e. "Vibration Check List OK"

Sheet Ref: L1

Job Ref:No: [redacted] IL2634

TEST LOG SHEET

Diag No	Table No	Notes and Results	CDS File	Stamp & Date
		JIG FITTED TO 9X3 SUPPORT		
		JIG BOLTS TORQUED TO 20KgFt.		MMS 120 UK
		CONTROL INST' FITTED		6/9/99

NCR No

Sheet Ref: L2

Job Ref:No: [redacted] IL2634.

TEST LOG SHEET

Specification No	Aspect	Environmental Conditions Required	Test Item S/No	Run No
	ZZ Axis	SD2552 D (1) SDS 221	JIG	1
	LL SINE	5-2000Hz 0.2g 2oct/min		
	2pt Aver Cont	L980 Horiz GAIN 5		
	100mV/g	V CL OK		
		MMS 120 UK		
	ZZ Axis	As run 1	FM001	2
	L.L Sine			
	2pt aver cont			
	100mV/g	V cl O.K		
		MMS 122 UK		
	ZZ Axis	SD2552B(1) SDR227	FM001	3
	Accept R/N	20-160Hz @ 3dB/oct 160-250Hz @ 0.08g²/Hz		
	2pt aver cont	250-2000Hz @ -3dB/oct 7.4grms 1 minute.		
	10mV/g	L980 (hori) Gain 8		
		~~Prot 1: 9grms~~ V cl O.K.		
		MMS 122 UK		
	ZZ Axis	As run 1	FM001	4
	LL Sine			
	2pt aver cont			
	100mV/g	V cl O.K		
		MMS 122 UK		

Sheet Ref: L3

Job Ref:No: [redacted] IL2634.

TEST LOG SHEET

Diag No	Table No	Notes and Results	CDS File	Stamp & Date
1	1	SWEEP APPLIED. PLOT TAKEN	001.swp	
		DATA OK.		MMS 120 UK 6/9/99
		Unit installed by AIT		
		Unit instrumented as per fig 4.4-1 of		7/9/99
		3164-SP030-TPF, Issue 1.		
1	1			
		Sweep applied, plot taken of aver cont, all	002.swp	
		responses O.K. Similar to cl2400008.swp		7/9/99
				MMS 122 UK
1	1			
		60sec applied at full level of 7.489 grms,		
		plot taken of aver cont, all responses O.K.	001.spa	7/9/99
1	1			
		Sweep applied, plot taken of aver cont, all		
		responses O.K.	003.swp	7/9/99
		Runs 2 & 4 compared, no significant changes.		
		Unit removed by AIT. Jig removed, rotated		
		90° - see D2, retorqued to 20lbft.		7/9/99

NCR No

Sheet Ref: L 4

Job Ref:No: [redacted] IL2634.

TEST LOG SHEET

Specification No	Aspect	Environmental Conditions Required	Test Item S/No	Run No
	Y Axis	SD2552B(1) SDS227	Jig	5
	L.L. Sine	±0.2g 5-2000Hz @ 20 oct/MIN		
	2pt ave cont	L980 (horl) Gain 6		
	100mV/g	V cc O.K.		
	Y Axis	As run 5	FM001	6
	L.L. Sine			
	2pt ave cont			
	100mV/g	V cc O.K.		
	Y Axis	SD2552B(1) SDR227	FM001	7
	Accept R/N	20-160Hz @ 3dB/oct 160-250Hz @ 0.08g²/Hz		
	2pt ave cont	250-2000Hz @ -3dB/oct 7.4gRMS / minute		
	10mV/g	L980 (horl) Gain 8		
		V cc O.K.		
	Y Axis	As run 5	FM001	8
	L.L. Sine			
	2pt ave cont			
	100mV/g	V cc O.K.		

Sheet Ref: L5

Job Ref:No: [redacted] IL2634

TEST LOG SHEET

Diag No	Table No	Notes and Results	CDS File	Stamp & Date
2	1			
		Sweep applied, plot taken of over cont, all		
		responses O.K. 101 x eg high up to 2g from	004.swp	7/9/99
		1200Hz onwards, similar to d24000i2.swp		
		Unit attached to jig by AIT.		8/9/99
2	1			
		Sweep applied, plot taken of over cont,		
		all responses O.K.	005.swp	8/9/99
2	1			
		60 secs applied at full level of 7.577g rms,		
		plot taken of over cont, all responses O.K.	002.swp	8/9/99
2	1			
		Sweep applied, plot taken of over cont,		
		all responses O.K	006.swp	8/9/99
		Runs 6 & 8 compared, no significant changes.		
		Vibrator rotated to vertical position, expander		
		head fitted 3/8" UNC 20 lb/ft, 1/2" UNF 45 lb/ft.		8/9/99
		Jig fitted as per D3, torqued to 20 lb/ft.		

NCR No

Sheet Ref: L6

Job Ref:No: [redacted] IL2634

TEST LOG SHEET

Specification No	Aspect	Environmental Conditions Required	Test Item S/No	Run No
	XX Axis	SD2552B(1) SDS 221		
	L.L. Sine	±0.2g 5-2000Hz @ 2oct/min	Jig	9
	2pt aver cont	L980 (horiz) Gain & 5		
	100mV/g	V cl. O.K.		
	XX Axis	As run 9	FM001	10
	L.L. Sine			
	2pt aver cont			
	100mV/g	V cl. O.K		
	XX Axis	SD2552B(1) SDR227	FM001	11
	Accept R/N	20-160Hz @ 3dB/oct 160-250Hz @ 0.08g²/Hz		
	2pt aver cont	250-2000Hz @ -3dB/oct 7.4grms 1 minute		
	10mV/g	L980 (Vert) Gain 8		
		V cl. O.K.		
	XX Axis	As run 9	FM001	12
	L.L. Sine			
	2pt aver cont			
	100mV/g	V cl. O.K.		

Sheet Ref: L7

Job Ref:No: [redacted] IL2634

TEST LOG SHEET

Diag No	Table No	Notes and Results	CDS File	Stamp & Date
3	1			
		Sweep applied, plot taken of aver cont,		
		all responses O.K.	007.swp	8/9/99
		Unit attached by PIT., instrumentation		
		connected to boom.		8/9/99
3	1			
		Sweep applied, plot taken of aver cont,		
		all responses O.K.	008.swp	8/9/99
3	1			
		60 secs applied, at full level of 7.36g pms,		
		plot taken of aver cont, all responses O.K.	003.spe	8/9/99
3	1			
		Sweep applied, plot taken of aver cont,		
		all responses O.K.	009.swp	8/9/99
		Runs 10 & 12 compared, no significant changes.		
		Unit deinstrumented		
		Unit removed and taken away by		
		project.		8/9/99

NCR No

Sheet Ref: L8

Job Ref:No: [redacted] IL2634

TEST LOG SHEET

Specification No	Aspect	Environmental Conditions Required	Test Item S/No	Run No

Sheet Ref: L9

Job Ref:No: [redacted] IL2634

TEST LOG SHEET

Diag No	Table No	Notes and Results	CDS File	Stamp & Date
		All work completed		
		THC IL2634-1 raised		
		All data files transfered to optical disk.		[signature] 9/9/94
		Logbook may be closed.		

NCR No

Sheet Ref: L10

Job Ref:No: [redacted] IL2634

TEST LOG SHEET

Specification No	Aspect	Environmental Conditions Required	Test Item S/No	Run No

SHEET REF No: T

JOB REF: ELIL2634

TABLE No:

ACCELEROMETER POS	TYPE	SER NO	SENS pc/g	CAL DATE	BOOM	CHARGE AMP No	SER No	mV/g	CAL DATE	CDS No	REMARKS
101X	2226C	AFJ04	2.98	281099	1	1	13730	10	151099	201	
101Y	2226C	10947	3.24	281099	2	2	13749	10	160999	202	
101Z	2226C	AFJ10	2.99	291099	3	3	14357	10	260300	203	
102X	226C	YA16	2.80	220600	4	4	13727	10	230999	204	
102Y	2226C	AFJ33	3.30	090400	5	5	14356	10	151099	205	
102Z	2226C	AFJ61	2.92	120500	6	6	13737	10	230999	206	
1X	2222C	21620	1.37	210600	7	7	13734	10	280100	207	
1Y	2222C	21758	1.36	210600	8	8	29559	10	270100	208	
1Z	2222C	21801	1.35	110600	9	9	13745	10	060700	209	
2X	2222C	21815	1.28	180600	10	10	25958	10	270100	210	
2Y	2222C	21688	1.44	180600	11	11	13739	10	061099	211	
2Z	2222C	21824	1.08	120600	12	12	14361	10	090999	212	

Additional Information:

Stamp & Date:

MAR 120 UK

6/9/99

Sheet Ref: D1

Job Ref: IL2634.

TEST CONFIGURATION DIAGRAM

Diag. No	Jig drawing/reference No:	Stamp & Date
	1) SET UPON 980 SUPTABLE Z AXIS	

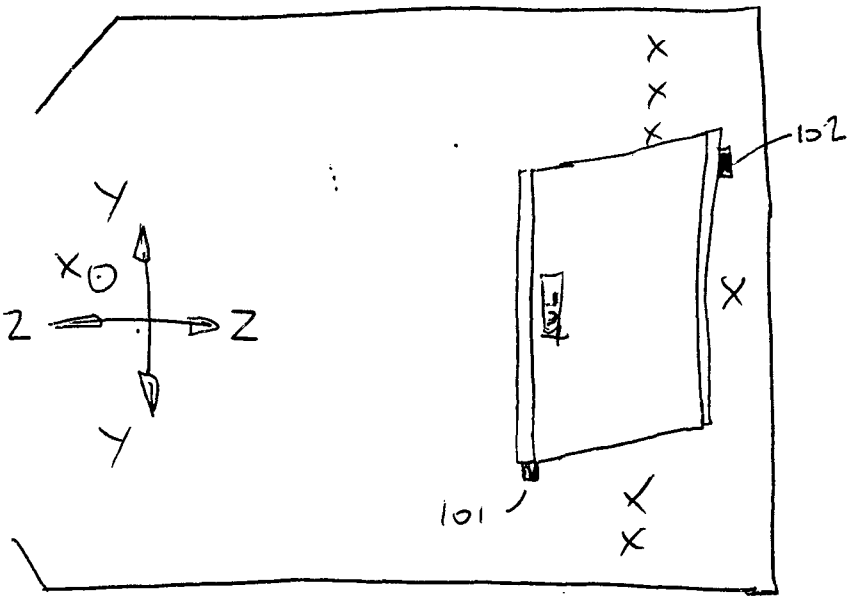

MMS 120 UK

6/9/99

② Set Up For ~~Fitbn~~ On L980 Shptable.

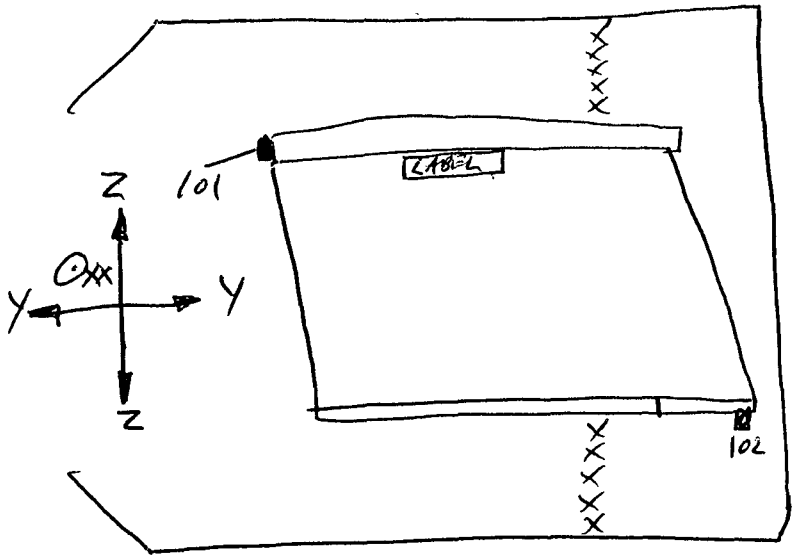

MMS 120 UK 1/9/99

IMPORTANT Each diagram must clearly show:

1) Definition of Axes.
2) Location of accelerometers and their axes.
3) Vibration, interface plates and Fixtures used.

EVT

Sheet Ref: D2

Job Ref: IL 2634.

TEST CONFIGURATION DIAGRAM

Diag. No	Jig drawing/reference No:	Stamp & Date
3	Set Up For Vibn On L980 (Vertical)	

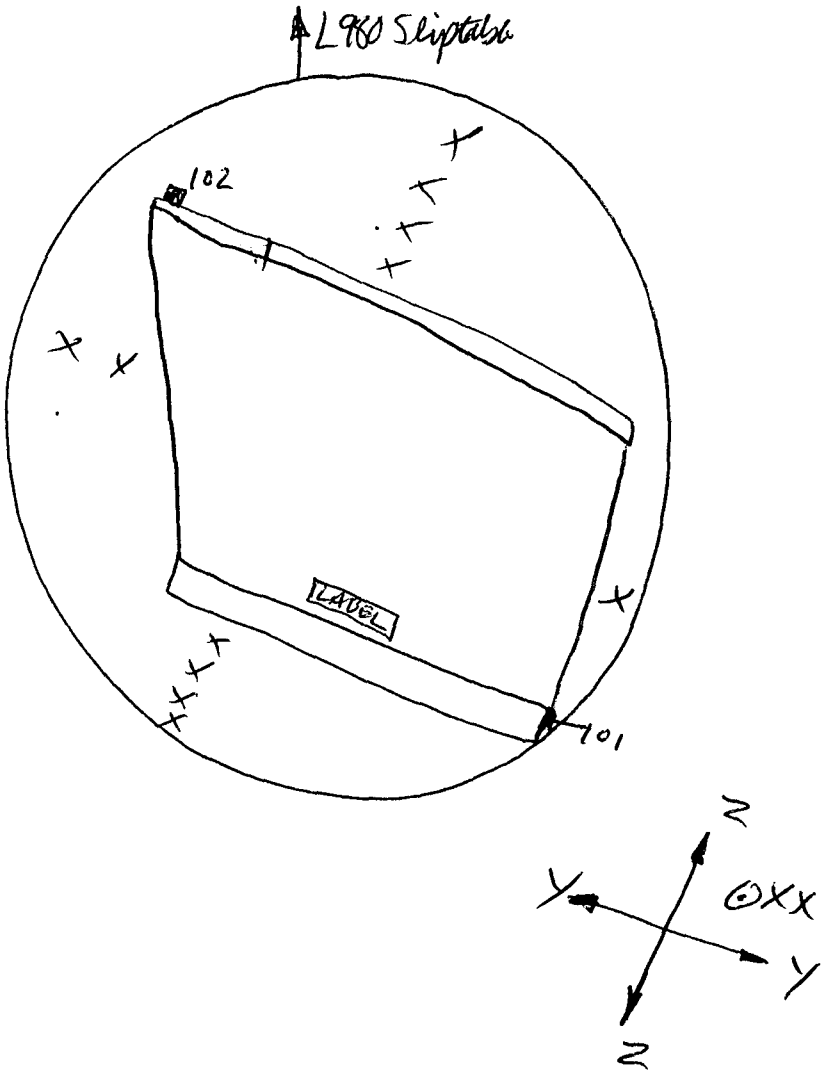

8/9/99

IMPORTANT Each diagram must clearly show:

1) Definition of Axes.
2) Location of accelerometers and their axes.
3) Vibration, Interface plates and Fixtures used.

SECTION 4

Contamination and Cleanliness Records

Matra Marconi Space U.K

Cleaning Log Sheet

H.I.R.D.L.S Hinge Assembly
HR1L 006, Issue 4

All items are cleaned in accordance with 3164-SS070-PLP Issue A

B.O.M No	Part No	Issue	Description	Stamp	Date
1	HR1L 008	01	Hinge Bracket	S	8/6/99
2	HR1L 012	02	Hinge Pin	S	8/6/99
3	HR1L 010	01	Bearing Retainer	S	8/6/99
4	HR1L 014	02	Special Washer	S	8/6/99
5	HR1l 013	01	Spacer	S	8/6/99
6	HR1L 029	02	Mounting Spool	S	22/6/99
9	MD 50056	/	Bellows	S	8/6/99

Matra Marconi Space U.K

Cleaning Log Sheet

H.I.R.D.L.S Hinge Assembly
HR1L 007, Issue 2

All items are cleaned in accordance with 3164-SS070-PLP Issue A

B.O.M No	Part No	Issue	Description	Stamp	Date
1	HR1L 009	01	Hinge Bracket	S	8/6/99
2	HR11 015	01	Drive Coupling	S	8/6/99
3	HR11 010	01	Bearing Retainer	S	8/6/99
4	HR11 011	01	Hinge Pin	S	8/6/99
5	HR11 013	01	Spacer	S	8/6/99
7	HR11 003	01	Panamech Coupling	S	8/6/99.

Matra Marconi Space U.K

Cleaning Log Sheet

H.I.R.D.L.S Release Mechanism Assembly HR1L 024, Issue 5

All items are cleaned in accordance with 3164-SS070-PLP Issue A

B.O.M No	Part No	Issue	Description	Stamp	Date
1	HR1L 030	03	Mounting Bracket	S	29/6/99
2	HR1L 031	02	Lever	S	9/6/99
3	HR1L 032	01	Spring Retainer	S	9/6/99
4	HR1L 033	02	Bearing Retainer	S	9/6/99
5	HR1L 034	01	Spigot	S	9/6/99
6	HR1L 035	01	Screw Stop	S	9/6/99
7	HR1L 036	01	Shaft End	S	9/6/99
8	HR1L 037	01	Bearing Retainer	S	9/6/99
9	HR1L 038	02	Shaft	S	9/6/99
12	HR11 042	02	Shaft Tip	S	9/6/99.
13	HR1L 043	02	Catch Retainer	S	2/7/99
14	HR1L 044	03	Spring	S	11/6/99
17	HR11 047	01	Plate	S	9/6/99
20	HR11 053	03	Actuator	S	11/6/99.

21	HR1L 051	01	Spring Retainer	S	9/6/99
23	HR1l 076	01	Spring Resistant Bracket	S	29/6/99
24	HR1L 077	01	Nut Plate	S	2/7/99
44	ML 50033	/	Bearing Plane	S	9/6/99
45	ML 50034	/	Bearing Flange	S	9/6/99
55	F841925-20L	/	Pin Dowel	S	9/6/99

Matra Marconi Space U.K

Cleaning Log Sheet

H.I.R.D.L.S HDA Panel / Seal Assembly
HR1L 075, Issue 1

All items are cleaned in accordance with 3164-SS070-PLP Issue A

B.O.M No	Part No	Issue	Description	Stamp	Date
1	3164-SA006-05-F	01	Aperture		29/9/99

Matra Marconi Space U.K

Cleaning Log Sheet

H.I.R.D.L.S Sunshield & HRD Assembly HR1L 100, Issue 4

All items are cleaned in accordance with 3164-SS070-PLP Issue A

B.O.M No	Part No	Issue	Description	Stamp	Date
4	HR11 018	01	Hinge Clevis	S	22/7/99.
5	HR1L 021	01	Hinge Clevis (Motor)	S	22/7/99
10	HR1L 070	02	Latch Plate	S	22/7/99
11	HR11 071	01	Vee Locator	S	22/7/99
15	HR11 026	01	Guide Pad	S	22/7/99
16	HR11 027	01	Guide Pad	S	22/7/99
18	HR11 017	01	Screw Stop	S	22/7/99
24	HR1L 055	01	Brush (Special)	S	22/7/99

5

SECTION 5

Open Item Register

SECTION 5

No Open Items

SECTION 5

User Manuals SP-MMS-455, TC-MMS-400

HIRDLS

SP-MMS-455
(3164-SS090-MAI)
Issue 2

HIGH RESOLUTION DYNAMICS LIMB SOUNDER

Originator N Crossland Date 19 November, 1999

Subject/Title: **FM Structure Thermal Subsystem Assembly and Disassembly Handbook**

Description/Summary/Contents:

The purpose of this document is to define the following:-

a) The method for assembling and disassembling the component parts of the Flight Model (FM) Structure Assembly
b) The method for attaching the Space View Aperture, and Sunshield Door and Aperture Plate Assemblies to the FM structure

It is intended that the Customer and the Instrument Integrator shall use this document for the above purposes

The document is intended to address the minimum assembly and disassembly requirements for the FM Structure Thermal Subsystem only and is not intended to cover other subsystem unit integration requirements. The Instrument Integrator is responsible for STH and Unit integration.

Keywords FM, STH, Assembly, Handbook

Purpose of this Document: Definition of FM Structure Assembly Instructions

Reviewed/Approved by:			
Date (yy-mm-dd).	99-12-02		

Matra Marconi Space
Anchorage Road
Portsmouth
Hampshire PO3 5PU
England

EOS

ORIGINAL WHEN RED

FM STRUCTURE THERMAL SUBSYSTEM ASSEMBLY AND DISASSEMBLY HANDBOOK

SP-MMS-455

Responsible Engineer. N Greenland Date. 30th Nov 1999

Quality Assurance. Date 3-12-99

Project Manager. Date 2 Dec 99

© MATRA MARCONI SPACE UK LIMITED

THE COPYRIGHT IN THIS DOCUMENT IS THE PROPERTY OF MATRA MARCONI SPACE UK LIMITED This document is supplied by Matra Marconi Space UK Limited on the express terms that it is to be treated as confidential and that it may not be copied, used or disclosed to others for any purpose except as expressly authorised under the terms of Contract No N2A 3R 0386

Any person, other than the authorised holder, who finds or otherwise obtains possession of the document, should post it, together with his/her name and address, to the Registry, Matra Marconi Space UK Limited, Anchorage Road, Portsmouth, England, PO3 5PU Postage will be refunded

CONTENTS

1. SCOPE 4

2. DOCUMENTS 5

2 1 APPLICABLE DOCUMENTS 5
2 2 REFERENCE DOCUMENTS 5
2 3 DRAWINGS 5

3. KIT OF PARTS 6

4. MECHANICAL GROUND SUPPORT EQUIPMENT (MGSE) 7

5. GENERAL ASSEMBLY INSTRUCTIONS 8

6 STH STRUCTURE ASSEMBLY PROCEDURE 9

6 1 ATTACHING THE +X OUTER PANEL (ITEM 3) 9
6 2 ATTACHING THE +Y OUTER PANEL (ITEM 6) 9
6 3 ATTACHING THE ELECTRONICS COMPARTMENT SUB-ASSEMBLY (ITEMS 2, 4, 9 AND 10) 9
6 4 ATTACHING THE MEZZANINE PANEL (ITEM 8) 10
6 5 ATTACHING THE -Y OUTER PANEL (ITEM 5) 10
6 6 ATTACHING THE SUNSHIELD SUPPORT PANEL (ITEM 12) 10
6 7 ATTACHING THE FIXED SUNSHIELD PANEL (ITEM 11) 11
6 8 ATTACHING THE +Y SUNSHIELD LIP (ITEM 7) 11

7. STH STRUCTURE DISASSEMBLY PROCEDURE 12

7 1 REMOVING THE SUNSHIELD LIPS 12
7 2 REMOVING THE FIXED SUNSHIELD AND SUNSHIELD SUPPORT PANEL 12
7 3 REMOVING THE -Y PANEL 12
7 4 REMOVING THE MEZZANINE PANEL 12
7 5 REMOVAL OF THE ELECTRONICS COMPARTMENT SUB-ASSEMBLY 13
7 6 REMOVING THE +Y OUTER PANEL 13
7 7 REMOVING THE +X OUTER PANEL 13

8 INTEGRATION OF THE SPACE VIEW APERTURE ASSEMBLY (SVA) 14

8 1 INTRODUCTION 14
8 2 ATTACHING THE SVA TO THE STRUCTURE 14

9. INTEGRATION OF THE SUNSHIELD DOOR AND APERTURE PLATE ASSEMBLY 15

9 1 INTRODUCTION 15
9 2 ATTACHING THE SUNSHIELD APERTURE PLATE TO THE STRUCTURE 15

10. SHIM DETAILS 16

APPENDIX A INTEGRATION OF THE STH STRUCTURE ASSEMBLY 18
APPENDIX B INTEGRATION OF THE SPACE VIEW APERTURE ASSEMBLY 28
APPENDIX C INTEGRATION OF THE SUNSHIELD DOOR AND APERTURE PLATE ASSEMBLY 31
APPENDIX D SHIM DETAILS 34

DISTRIBUTION LIST 37
CHANGE RECORD 37

1. SCOPE

This document is intended to address the minimum assembly and disassembly requirements for the FM Structure Thermal Subsystem only and is not intended to cover other subsystem unit integration requirements. The Instrument Integrator is responsible for STH and Unit integration.

This handbook is applicable to the HIRDLS Flight Model (FM) Structure Thermal Subsystem Assembly

It defines the instructions for ,

assembling and disassembling the component parts of the HIRDLS Structure Assembly,
integration of the Space View Aperture Assembly, and
integration of the Sunshield Door and Aperture Plate Assembly

These three main assembly activities form a logical division of this handbook as follows:-

Sections 6, 7 and Appendix A -	Assembly and disassembly of the STH Structure Assembly
Section 8 and Appendix B -	Integration of the Space View Aperture Assembly
Section 9 and Appendix C -	Integration of the Sunshield Door and Aperture Plate Assembly

For integration of the Thermal Subsystem (BOM 3164-TH001-02-F), refer to Installation Handbook SP-MMS-471

2. DOCUMENTS

The latest issue of the following documents is applicable at the date of issue of this document.

2.1 Applicable Documents

AD1	Structure/Thermal Subsystem Specification Document	SP-HIR-031
AD2	Sunshield Subsystem Specification Document	SP-HIR-050
AD3	Turnover Stand Assembly Instructions	TC-RAL-094
AD4	Turnover Stand Assembly Drawing	A0-KE-0124-380-01
AD5	Lifting Frame Assembly and Operating Instructions	TC-RAL-144
AD6	Lifting Frame Assembly Drawing	A0-KE-0124-100-00
AD7	Electrical Bonding Resistance Test Procedure	TP-MMS-335

2.2 Reference Documents

RD1	Internal Interface Control Document (System Section)	SP-HIR-200
RD2	Flight Model (FM) Structure Assembly Drawing Tree and List	DW-MMS-435
RD3	Flight Model (FM) Sunshield/HDA Assembly Drawing Tree and List	DW-MMS-436
RD4	Flight Model (FM) Space View Aperture Assembly Drawing Tree and List	DW-MMS-437

2.3 Drawings

DG1	Structure/Thermal Subsystem ICD	DW-MMS-254
DG2	Sunshield Subsystem ICD	DW-MMS-307
DG3	Space View Albedo Assembly ICD	DW-MMS-268
DG4	Structure/Thermal Subsystem General Assembly	DW-MMS-213

3. KIT OF PARTS

The following is the list of parts used for assembly of the Structure / Thermal Subsystem (3164-SS001-02-F)

ITEM NO.	PART NUMBER	DESCRIPTION	NO. OFF
100	3164-SX001-05-F	STRUCTURE ASSEMBLY	1
200	3164-ST001-05-F	THERMAL HARDWARE(1)	1
300	HR2L040	SPACE VIEW ALBEDO ASSEMBLY	1
400	HR1L100	SUNSHIELD & HDA ASSEMBLY	1
500	3164-SS031-05-F	STRUCTURE / THERMAL ASSEMBLY KIT	1

(1) Thermal Hardware comprises blanket pins and grounding studs which are incorporated on structure panels, i e they are not delivered as a separate item

TABLE 3-1 PARTS LISTING OF THE STRUCTURE / THERMAL SUBSYSTEM ASSEMBLY

The following is the list of parts used for assembly of the Structure Assembly (3164-SX001-05-F)

ITEM NO.	PART NUMBER	DESCRIPTION	NO. OFF
1	3164-SX002-05-F	BASEPLATE	1
2	3164-SX003-05-F	-X OUTER PANEL	1
3	3164-SX005-05-F	+X OUTER PANEL	1
4	3164-SX005-05-F	MID PANEL	1
5	3164-SX006-05-F	-Y OUTER PANEL	1
6	3164-SX007-05-F	+Y OUTER PANEL	1
7	3164-SX008-05-F	+Y SUNSHIELD LIP	1
8	3164-SX009-05-F	MEZZANINE PANEL	1
9	3164-SX010-05-F	ELECTRONICS SHELF	1
10	3164-SX012-05-F	EU TOP PANEL	1
11	3164-SX013-05-F	FIXED SUNSHIELD	1
12	3164-SX017-05-F	SUNSHIELD SUPPORT PANEL	1
13	3164-SX031-05-F	-X SUNSHIELD LIP	1
15	SF105-0001-019N	M4 x 0,7 TITANIUM TORX HEAD SCREW 14 LONG	136
16	SF105-0001-018N	M4 x 0,7 TITANIUM TORX HEAD SCREW 12 LONG	46
17	SF400-0001-006N	M4 STAINLESS STEEL WASHER	182

TABLE 3-2 PARTS LISTING OF THE STRUCTURE ASSEMBLY

4. MECHANICAL GROUND SUPPORT EQUIPMENT (MGSE)

4 1 All assembly, disassembly, and lifting operations performed during the Structure / Thermal Subsystem Assembly shall utilise the following support equipment

HIRDLS Turnover Stand Assembly	Part No. A0-KE-0124-380-01
HIRDLS Lifting Frame Assembly	Part No. A0-KE-0124-100-00

4 2 Operating instructions are defined in both AD3 and AD5 respectively

5. GENERAL ASSEMBLY INSTRUCTIONS

5 1 Due to the complexity of this assembly, it is advised that this procedure is thoroughly read and the assembly sequence fully understood, before any assembly or disassembly operations are undertaken.

5 2 Unless otherwise stated, loosely assemble the structure using torque values not to exceed 50% of the full value specified for panel fixings Ensure that there is no distortion or twisting of the panels and that the structure is in a stress free state prior to the final torque being applied

5 3 Tolerance on maximum torque values shall be ± 10% of applied torque up to a maximum tolerance of ± 0.1 Nm.

5 4 Gaps exceeding 0 05mm between cleat / panel interfaces, and mating panel edges should be shimmed prior to torquing the relevant fixings

6. STH STRUCTURE ASSEMBLY PROCEDURE

Numbers in Brackets (x) refer to the item numbers shown in Table 3 1

Appendix A1-1 shows an exploded view of the structures' component parts for clarification

6.1 Attaching the +X Outer panel (Item 3)

6 1 1 Appendix A1-2 shows the minimum build requirement for attaching the +X Outer Panel

6 1 2 Assemble the +X Outer Panel (3) to the Baseplate (1) using 8 off screws (15) and 8 off washers (17) Torque fixings to 6 0 Nm Refer to Section 5.2 prior to fitting the panel

6.1 3 Attach the grounding straps to the grounding points between the +X Outer Panel and Baseplate grounding studs (2 off) Torque fixings supplied to 2Nm, ensuring grounding straps do not rotate on tightening

6.2 Attaching the +Y Outer Panel (Item 6)

6.2 1 Appendix A1-3 shows the minimum build requirement for attaching the +Y Outer Panel However, an alternative minimum build is to attach the Mid Panel (4) as defined in Section 6 3 instead of the +X Outer Panel (3)

6 2 2 Attach the +X Outer Panel (or Mid Panel (4)) as described in Section 6 1 (or 6 3).

6 2 3 Assemble the +Y Outer Panel (6) to the Baseplate (1) and to the +X Outer Panel (3) using 12 off Screws (15) and 12 off Washers (17) Torque fixings to 6 0 Nm Refer to Section 5 2 prior to fitting the panel.

6 2.4 Attach the grounding strap on the panel to the grounding point on the +X Outer Panel Torque fixing supplied to 2Nm, ensuring grounding strap does not rotate on tightening.

6.3 Attaching the Electronics Compartment Sub-assembly (Items 2, 4, 9 and 10)

6 3 1 Appendix A1-4 shows the minimum build requirement for attaching the Electronics Compartment Sub-assembly

6 3 2 Assemble the Electronics Panel (9) to the Mid Panel (4) and the -X Outer Panel (2) using 14 off Screws (15) and 14 off Washers (17) Torque fixings to 6 0 Nm. Refer to Section 5.2 prior to fitting the panels

6 3 3 Assemble the EU Top Panel (10) to the Mid Panel (4) and the -X Outer Panel (2) using 13 off Screws (15) and 13 off Washers (17) Attach the two cleats on the EU Top Panel to the -X Outer Panel using 4 off Screws (16) and 4 off Washers (17). Torque fixings to 6 0 Nm Refer to Section 5 2 prior to fitting the panels

6 3 4 Fit the completed Sub-Assembly to the Baseplate (1) using 13 off Screws (15) and 13 off Washers (17) Torque fixings to 6 0 Nm Refer to Section 5 2 prior to fitting the assembly

6 3 5 Attach grounding straps between the following grounding points:-

-X Panel (2) and Baseplate (1)
-X Panel (2) and EU Top Panel (10)
-X Panel (2) and Electronics Panel (9)
Mid Panel (4) and +Y Outer Panel (6)

Torque fixings supplied to 2Nm, ensuring grounding straps do not rotate on tightening.

6.4 Attaching the Mezzanine Panel (Item 8)

6 4 1 Appendix A1-5 shows the minimum build requirement for attaching the Mezzanine Panel

6 4 2 The +Y Outer Panel (6) and Mid Panel (4) should be attached and torqued to the values provided in Sections 6.2 and 6 3, respectively

6 4 3 Assemble the Mezzanine Panel (8) to the +Y Panel (6) and the Mid Panel (4) Use 2 off Screws (15) and 2 off Washers (17) for attachment to the +Y panel and attach the seven cleats on the Mezzanine Panel to the Mid Panel using 14 off Screws (16) and 14 off Washers (17) Torque fixings to 6.0 Nm. Refer to Section 5.2 prior to fitting the panels.

6 4 5 Attach the grounding strap on the Mezzanine Panel to the +Y Outer Panel grounding point Torque fixings supplied to 2Nm ensuring grounding strap does not rotate on tightening.

6.5 Attaching the -Y Outer Panel (Item 5)

6 5.1 Appendix A1-6 shows the minimum build requirement for attaching the -Y Outer Panel

6 5.2 Attach the +X and +Y Outer Panels, the Electronics Compartment Sub-assembly and the Mezzanine Panel as shown in Sections 6.1 to 6.4

6 5.3 Assemble the -Y Outer Panel (5) to the Baseplate (1) using 10 off screws (15) and 10 off Washers (17) Torque fixings to 6.0 Nm Refer to Section 5.2 prior to fitting the panel

6 5 4 Assemble the -Y Outer Panel to the Mezzanine Panel (8), Mid Panel (4), -X Outer Panel (2), +X Outer Panel (3), and Electronics Shelf (9) using 22 off Screws (15) and 22 off Washers (17) Torque fixings to 6 0 Nm Refer to Section 5.2 prior to fitting the panels

6 5 5 Attach the grounding straps between the -Y Outer Panel and the Baseplate, the -Y Outer Panel and the Mezzanine Panel, and the -Y Outer Panel and the Mid Panel Torque fixings supplied to 2Nm, ensuring grounding straps do not rotate on tightening

6.6 Attaching the Sunshield Support Panel (Item 12)

6 6 1 Appendix A1-7 shows the minimum build requirement for attaching the Sunshield Support Panel

6.6 2 Attach the Electronics Compartment Sub-assembly as shown in Section 6 3

6 6 3 Attach the Sunshield Support Panel (12) to the EU Top Panel (10) using 12 off Screws (16) and 12 off Washers (17) Torque fixings to 6.0 Nm Refer to Section 5 2 prior to fitting the panels

6 6 4 Attach the -X Sunshield Lip (13) to the Sunshield Support Panel and the -X Outer Panel using 8 off Screws (16) and 8 off Washers (17) Torque fixings to 6 0 Nm Refer to Section 5 2 prior to fitting the panels

6 6 5 Attach the grounding straps between the EU Top Panel and Sunshield Support and the -X Sunshield Lip and the -X Outer Panel Torque fixings supplied to 2Nm, ensuring grounding straps do not rotate on tightening

6.7 Attaching the Fixed Sunshield Panel (Item 11)

6 7 1 Appendix A1-8 shows the minimum build requirement for attaching the Fixed Sunshield Panel

6 7 2 Attach the structure panels as shown in Sections 6 1 to 6 6

6 7.3 Assemble the Fixed Sunshield Panel (11) to the -X Outer Panel (2), -Y and +Y Outer Panels (5 and 6), and the Sunshield Support Panel (12) using 15 off Screws (15) and 15 off Washers (17). Torque fixings to 6 0 Nm Refer to Section 5 2 prior to fitting the panels Note that the interface to the sunshield support panel (12) requires shims at each of the 3 fixing positions – refer to Section 10 for details

6.7 4 Attach the grounding straps between the Fixed Sunshield Panel and the +Y Outer and the -Y Outer Panels Torque fixings supplied to 2Nm, ensuring grounding straps do not rotate on tightening.

6.8 Attaching the +Y Sunshield Lip (Item 7)

6 8 1 Appendix A1-9 shows the minimum build requirement for attaching the +Y Sunshield Lip

6 8 2 Attach the +X and +Y Outer panels as shown in Sections 6 1 and 6 2

6 8 3 Assemble the +Y Sunshield Lip (7) to the +Y Outer Panel (6) using 4 off Screws (16) and 4 off Washers (17) Torque fixings to a value of 6 0 Nm Refer to Section 5 2 prior to fitting the lip

6 8 4 Attach the grounding strap from the +Y Outer Panel to the nearest fixing on the +Y Sunshield Lip (7) using 1 off Screw (16) and 1 off Washer (17), ensuring grounding strap does not rotate on tightening

7. STH STRUCTURE DISASSEMBLY PROCEDURE

7.1 Removing the Sunshield Lips

7 1 1 Remove the grounding straps from the Sunshield lips. Only one end of each strap need be removed.

7 1.2 Remove the +Y Sunshield Lip (Item 7) from the +Y Panel (Item 6). Bag and tag the screws (16) and the washers (17).

7.1.3 Remove the -X Sunshield lip (13) from the Sunshield Support Panel (12) and the -X Outer Panel (2). Bag and tag the screws (16) and the washers (17)

7.2 Removing the Fixed Sunshield and Sunshield Support Panel

7 2 1 Remove the grounding straps from the -Y Outer Panel (5), the +Y Outer Panel (6) and the EU Top Panel (10) Only one end of each strap need be removed. Bag and tag all screws and washers.

7.2 2 Remove the Fixed Sunshield (11) from the -Y Outer Panel (5), +Y Outer Panel (6), +X Outer Panel (3) and the Sunshield Support Panel (12). Bag and tag the screws (15), washers (17), and shim packs

7.2 3 Remove the Sunshield Support Panel (12) from the EU Top Panel (10) Bag and tag the screws (16) and the washers (17).

7.3 Removing the -Y panel

7.3 1 Remove the grounding straps from the grounding points on the Baseplate (1), the Mezzanine Panel (8), and the Mid Panel (4) Only one end of each strap need be removed. Bag and tag all the screws and washers.

7.3.2 Disconnect the -Y Outer Panel (5) from the +X Outer Panel (3) and the -X Outer Panel (2) Bag and tag the screws (15) and the washers (17).

7 3.3 Disconnect the -Y panel (5) from the Mezzanine Panel (8), the Mid Panel (4), and the Electronics Shelf (9) Bag and tag the screws (15) and the washers (17)

7 3 4 Remove the -Y Panel (5) from the Baseplate (1) Bag and tag the screws (15) and the washers (17)

7.4 Removing the Mezzanine Panel

7 4 1 Remove the grounding strap from the grounding point between the Mezzanine Panel (8) and the +Y Outer Panel (6) Only one end of the strap need be removed Bag and tag all the screws and washers

7 4 2 Remove the Mezzanine Panel (8) from the +Y Panel (6), and the Mid Panel (4) Bag and tag the screws (15 and 16) and the washers (17)

7.5 Removal of the Electronics Compartment Sub-assembly

7 5 1 Remove the grounding straps (Item 27) from the grounding points between the following panels -

-X panel (2) and the Baseplate (1)
-X panel (2) and the EU Top Panel (10)
-X panel (2) and the Electronics Shelf (9)
Mid Panel (4) and the +Y Panel (6)

Only one end of each strap need be removed Bag and tag all the screws and washers

7 5 2 Remove from the Baseplate (1) and the +Y Panel (6), the Electronics Compartment subassembly, which comprises the EU Top Panel (10), the Mid Panel (4), the Electronics Shelf (9), and the -X Panel (2) Bag and tag the screws (15) and the washers (17)

7 5 3 Remove the EU Top Panel (10) from the Mid Panel (4) and the -X Panel (2) Bag and tag the screws (15 and 16) and the washers (17)

7 5 4 Remove the Electronics Shelf (9) from the Mid Panel (4) and the -X Panel (2) Bag and tag the screws (15) and the washers (17)

7.6 Removing the +Y Outer Panel

7 6 1 Remove the grounding strap from the grounding points between the +Y panel (6) and the +X Panel (3). Only one end of the strap need be removed Bag and tag all the screws and washers

7 6 2 Remove the +Y Panel (6) from the Baseplate (1) and the +X Panel (3). Bag and tag the screws (15) and the washers (17)

7.7 Removing the +X Outer Panel

7.7 1 Remove the two grounding straps between the +X Panel (3) and the Baseplate (1). One end of each strap need only be removed Bag and tag all the screws and washers

7 7 2 Remove the +X panel (3) from the Baseplate (1). Bag and tag the screws (15) and the washers (17)

8. INTEGRATION OF THE SPACE VIEW APERTURE ASSEMBLY (SVA)

8.1 Introduction

Numbers in brackets (x) refer to item numbers shown in Tables 3 1 and 3.2.

8 1 1 The Space View Aperture (SVA) Assembly (300) is fixed to the +Y Outer Panel (6) using special for purpose fixings These are included in the Structure / Thermal Subsystem Assembly Kit (500)

8.2 Attaching the SVA to the structure.

8 2 1 Appendix B1-1 shows the minimum build requirement for attaching the SVA to the structure

8 2 2 Attach the +X Outer Panel (3), +Y Outer Panel (6) and Mid Panel (4) to the Baseplate (1) as shown in Sections 6.1 to 6 3.

8.2 3 The Structure Assembly Kit for the SVA comprises the following -

ITEM NO	PART NUMBER	DESCRIPTION	NO OFF
B1	HR2L031	BOLT SPECIAL	5
B2	HR2L032	WASHER BRACKET SPECIAL	5
B3	HR2L033	SPACER	5
B4	MN50014	DISC SPRING	10
B5	F844329-001	MJ4 TITANIUM STD. SKT SCREW 16 LONG	1
B6	F834292-001	M4 ALUMINIUM WASHER	1

8 2 4 Remove the Albedo Shield from the SVA Assembly by unscrewing the 'C' hole screws shown in Appendix B1-2

8.2 5 Assemble 5 off fixing assemblies. Each fixing assembly must be assembled in the following sequence - Bolt Special (B1), followed by Spacer (B3), followed by Disc Spring (B4), and finally by Washer Bracket Special (B2)

8 2 6 Attach the SVA to the +Y Outer Panel (6) using the 5 off assemblies described in Section B 2 5 at positions 'A' and items B5 and B6 at Position 'B', as shown in Appendix B1-2 Torque fixings to the following values

Position 'A' 0,4 to 0,5 Nm
Position 'B' 2,1 to 2,2 Nm

8 2 7 Re-attach the Albedo Shield using supplied screws and torque fixings to 0,45 to 0,55 Nm

8 2 8 Removal is the reverse of the above Bag and Tag all screws and washers

9. INTEGRATION OF THE SUNSHIELD DOOR AND APERTURE PLATE ASSEMBLY

9.1 Introduction

Numbers in brackets (x) refer to item numbers shown in Tables 3 1 and 3 2

9 1 1 The Sunshield Door and Aperture Plate Assembly (400) is attached to four panels of the structure assembly; +Y Outer Panel (6), -Y Outer Panel (5), Mezzanine Panel (8) and the Fixed Sunshield (11) Special for purpose fixings are included in the Structure / Thermal Subsystem Assembly Kit (500)

9.2 Attaching the Sunshield Aperture Plate to the structure.

9 2.1 Appendix C1-1 shows the minimum build requirement for attaching the Sunshield Aperture Plate to the structure.

9 2 2 The Structure Assembly must be complete apart from the Fixed Sunshield (11) before attachment of the Aperture Plate can take place This is defined in Sections 6 1 to 6 6 and 6 8

9 2.3 Loosely attach the Sunshield Aperture Plate to the +Y Outer Panel (6), -Y Outer Panel (5) and Mezzanine panel (8) using 26 off M4 x 0,7 x 12 long Titanium Torx Head screws (Part No. SF105-0001-018N) contained in the Structure / Thermal Subsystem Assembly Kit (500). The removable cleats at the -Y edge of the aperture plate should be released to allow adjustment of the aperture plate between the +Y and –Y panels Once adjusted, the cleats shall be refitted and the nuts re-torqued to 2.4 Nm Note that the interface to the +Y panel (6) requires shims at each of the 8 fixing positions – refer to Section 10 for details

9 2 4 Loosely attach the Fixed Sunshield (11) to the adjoining panels as described in Section 6 7

9 2 5 Loosely attach the Aperture Plate to the Fixed Sunshield (11) using the 10 off remaining M4 x 0,7 x 12 long screws Note that the interface to the Fixed Sunshield requires shims at 9 of the 10 fixing positions – refer to Section 10 for details

9 2 6 Refer to Appendix C.1-2 Unlatch the Sunshield door by inserting an M5 socket head drive into the raised bolt head, located on the top surface of the latch body Rotate the drive slowly clockwise until the latch roller disengages from the door plate and the catch engages

Warning: Under no circumstances shall the drive be rotated anti-clockwise whilst the catch is engaged. This will result in damage to the latch spring mechanism.

9.2 7 Torque all 36 off fixings on the Aperture Plate to 6,0 Nm

9 2 8 Refer to Appendix C 1-2 Re-latch the Sunshield door by reinserting the drive into the raised bolt head Rotate the drive slowly clockwise until the catch can be disengaged from the spring mechanism Gently pull the spring mechanism clear of the catch, and allow the roller to roll back over the door plate

9 2 9 Unlatch the door prior to removing the Aperture Plate from the structure Re-latch the door on completion Bag and Tag all screws, washers, and shim packs

10. SHIM DETAILS

Shims were required at the following interfaces .-

- Fixed Sunshield to Sunshield Support Panel
- Sunshield Door and Aperture Plate Assembly to +Y Panel
- Sunshield Door and Aperture Plate Assembly to Fixed Sunshield

The general philosophy adopted was to shim gaps exceeding 0 05mm The shims were produced from peelable shim packs comprising 0.05mm thick layers **Failure to implement a shim strategy may result in damage to the interface hardware.**

Shim thickness details for the delivered Structure / Thermal Subsystem are provided in the Tables below and with reference to the Figures in Appendix D Shim gaps should be measured during each build sequence as it is likely that there will be some variation due to the build-up of tolerances

Shim Position (See Appendix D1-1)	Shim thickness (mm)
A1	2,00
A2	1,60
A3	1,25

Table 10-1 Fixed Sunshield to Sunshield Support Panel Shim Details

Shim Position (See Appendix D1-2)	Shim thickness (mm)
B1	0,00
B2	0,30
B3	0,25
B4	0,30
B5	0,35
B6	0,40
B7	0,35
B8	0,35
B9	0,25
B10	0,25

Table 10-2 Fixed Sunshield to Sunshield Aperture Plate Shim Details

Shim Position (See Appendix D1-3)	Shim thickness (mm)
C1	1,25
C2	1,25
C3	1,30
C4	1,00
C5	1,30
C6	0,95
C7	1,15
C8	1,10

Table 10-2 +Y Panel to Sunshield Aperture Plate Shim Details

APPENDIX A

INTEGRATION OF THE STH STRUCTURE ASSEMBLY

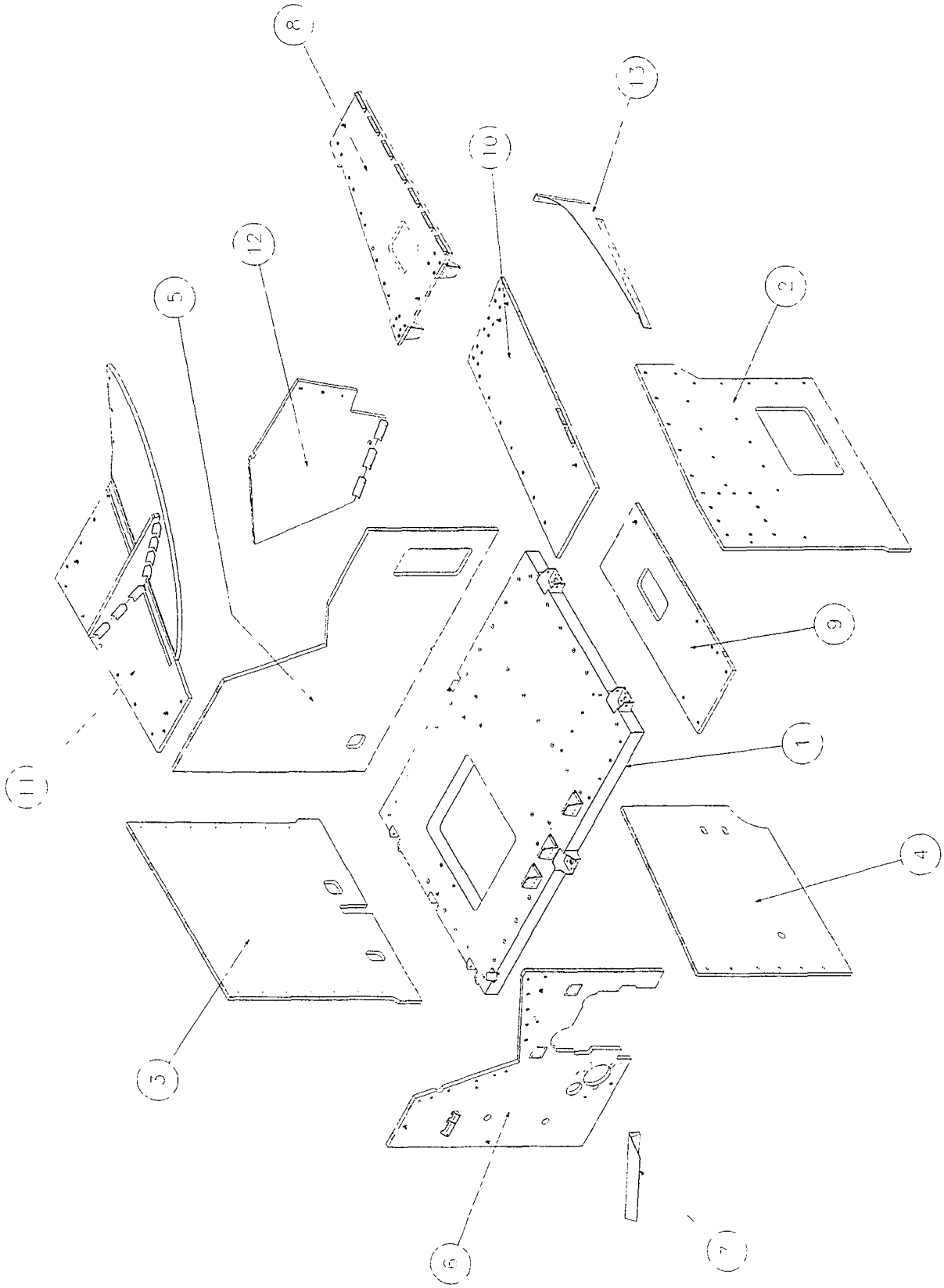

APPENDIX A1-1 EXPLODED VIEW OF STRUCTURE ASSEMBLY

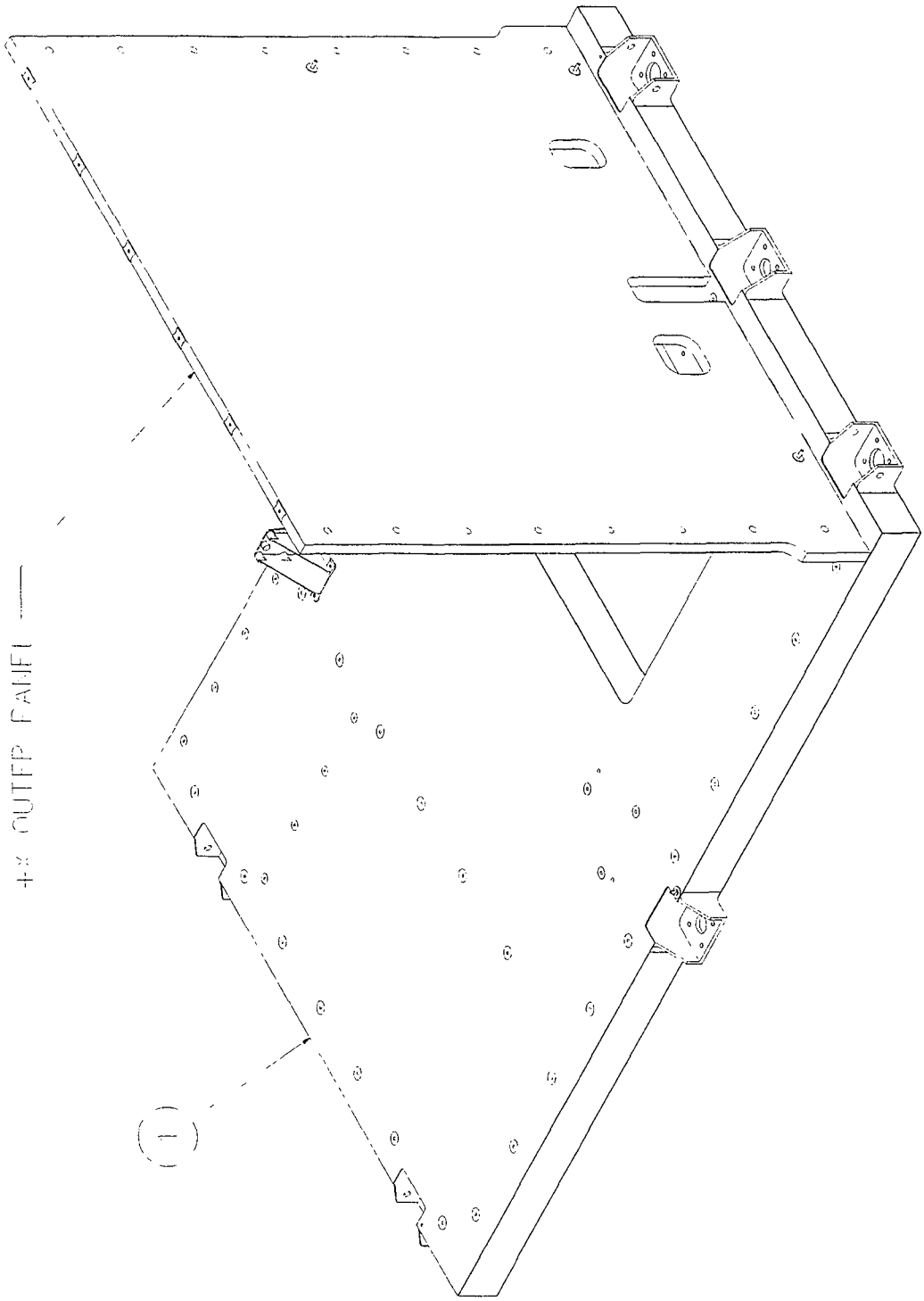

APPENDIX A1-2 ASSEMBLY OF +X OUTER PANEL TO BASEPLATE

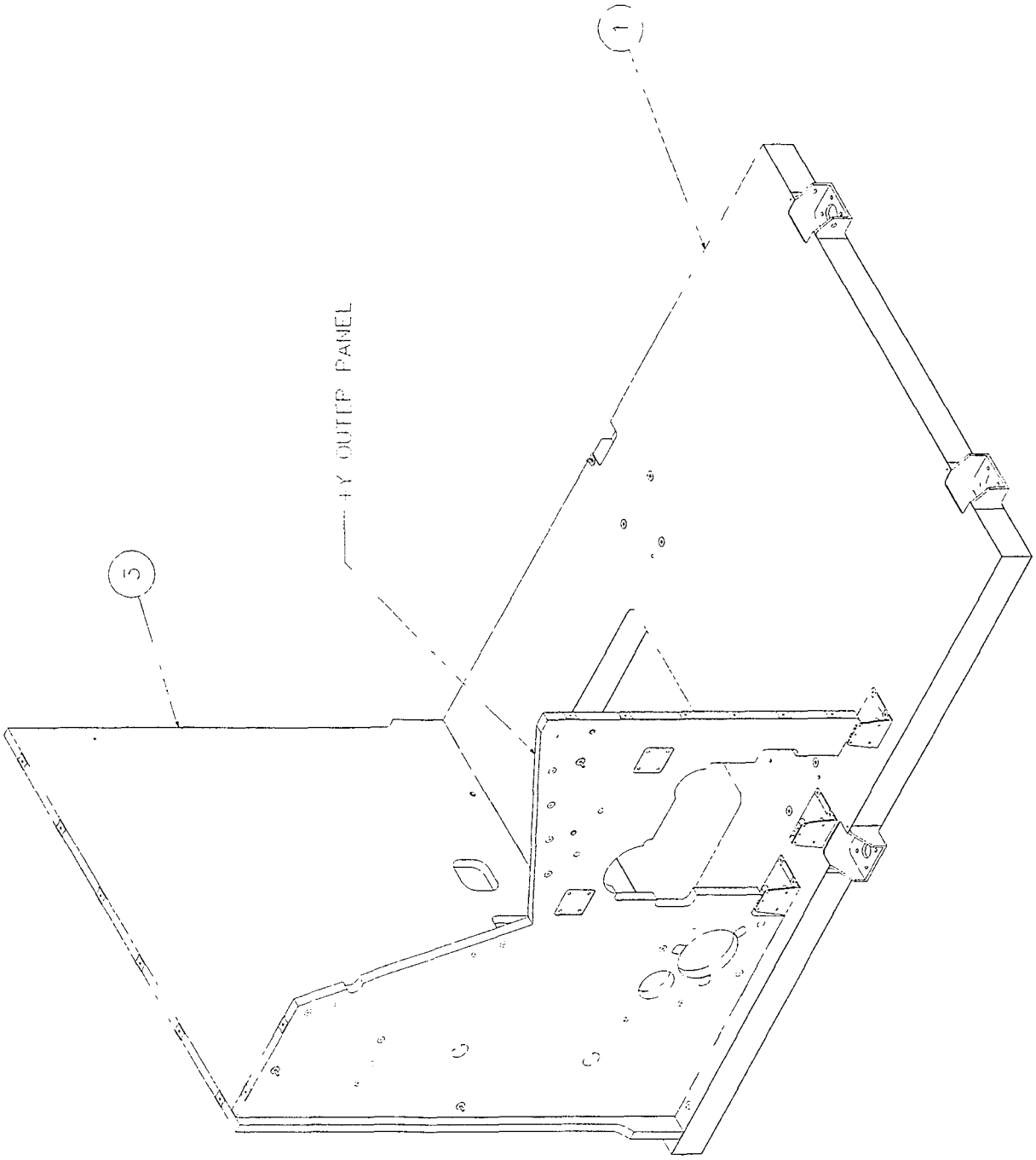

APPENDIX A1-3 ASSEMBLY OF THE +Y OUTER PANEL TO BASEPLATE

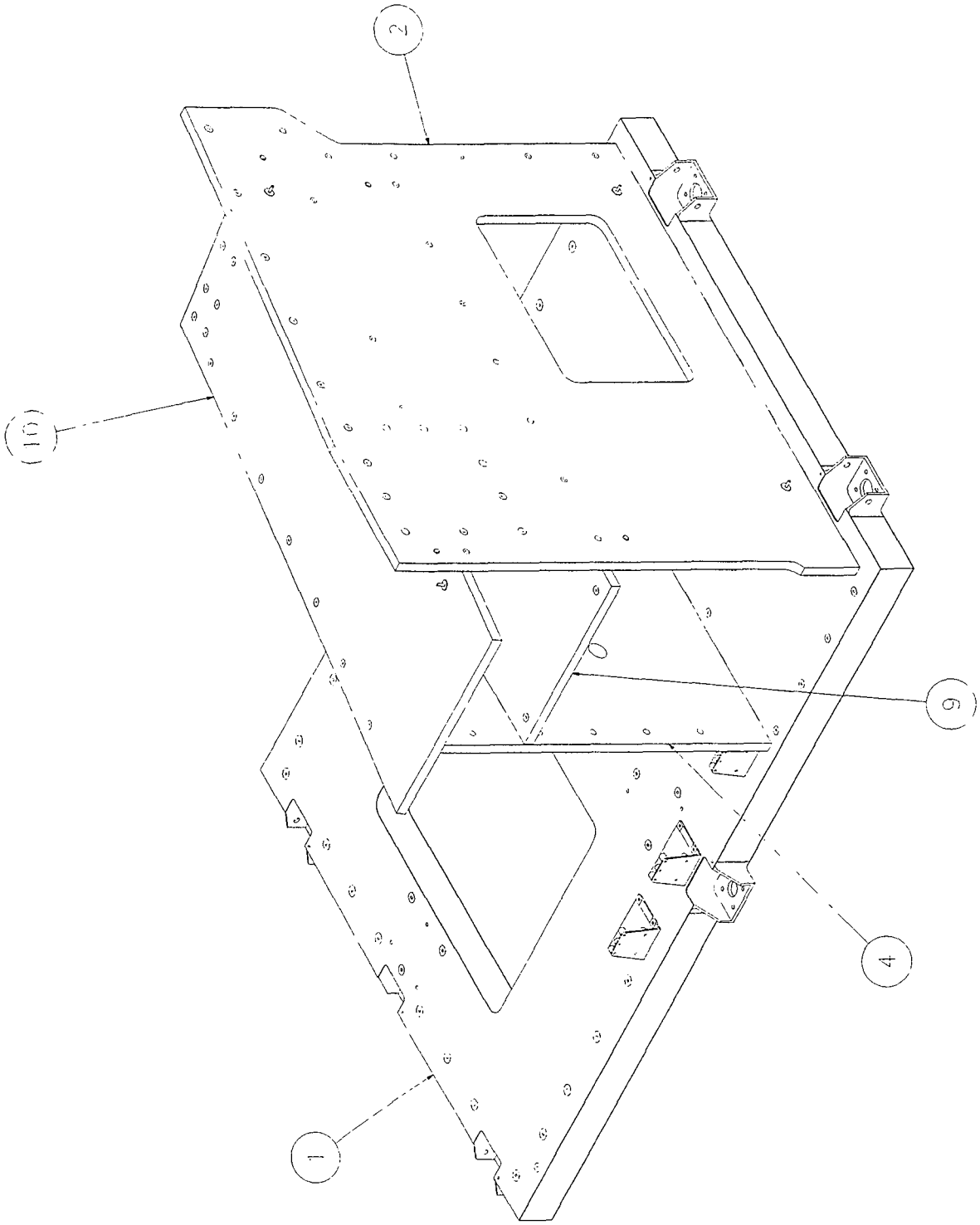

APPENDIX A1-4 ASSEMBLY OF ELECTRONICS COMPARTMENT SUBASSEMBLY

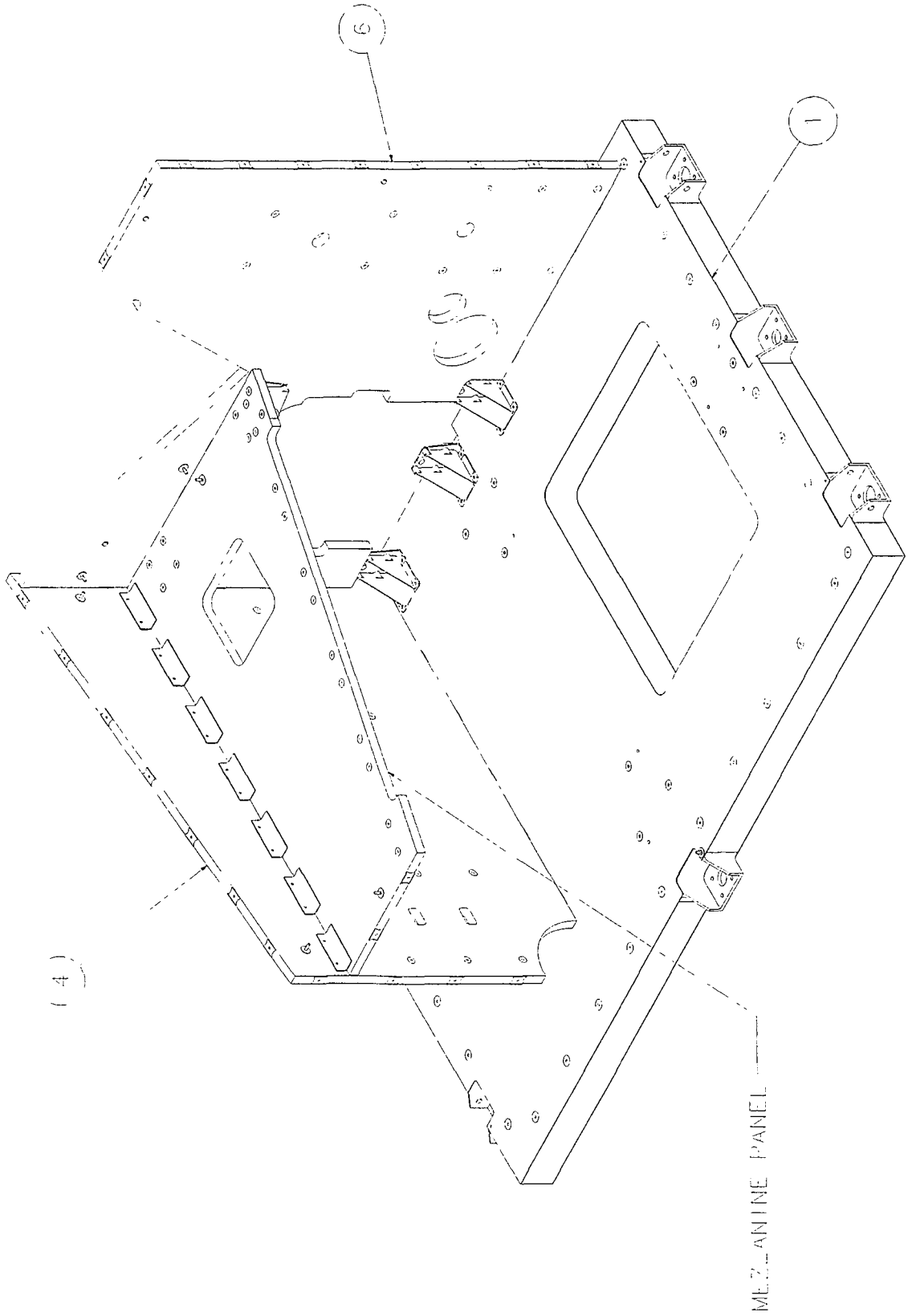

APPENDIX A1-5 ASSEMBLY OF THE MEZZANINE PANEL

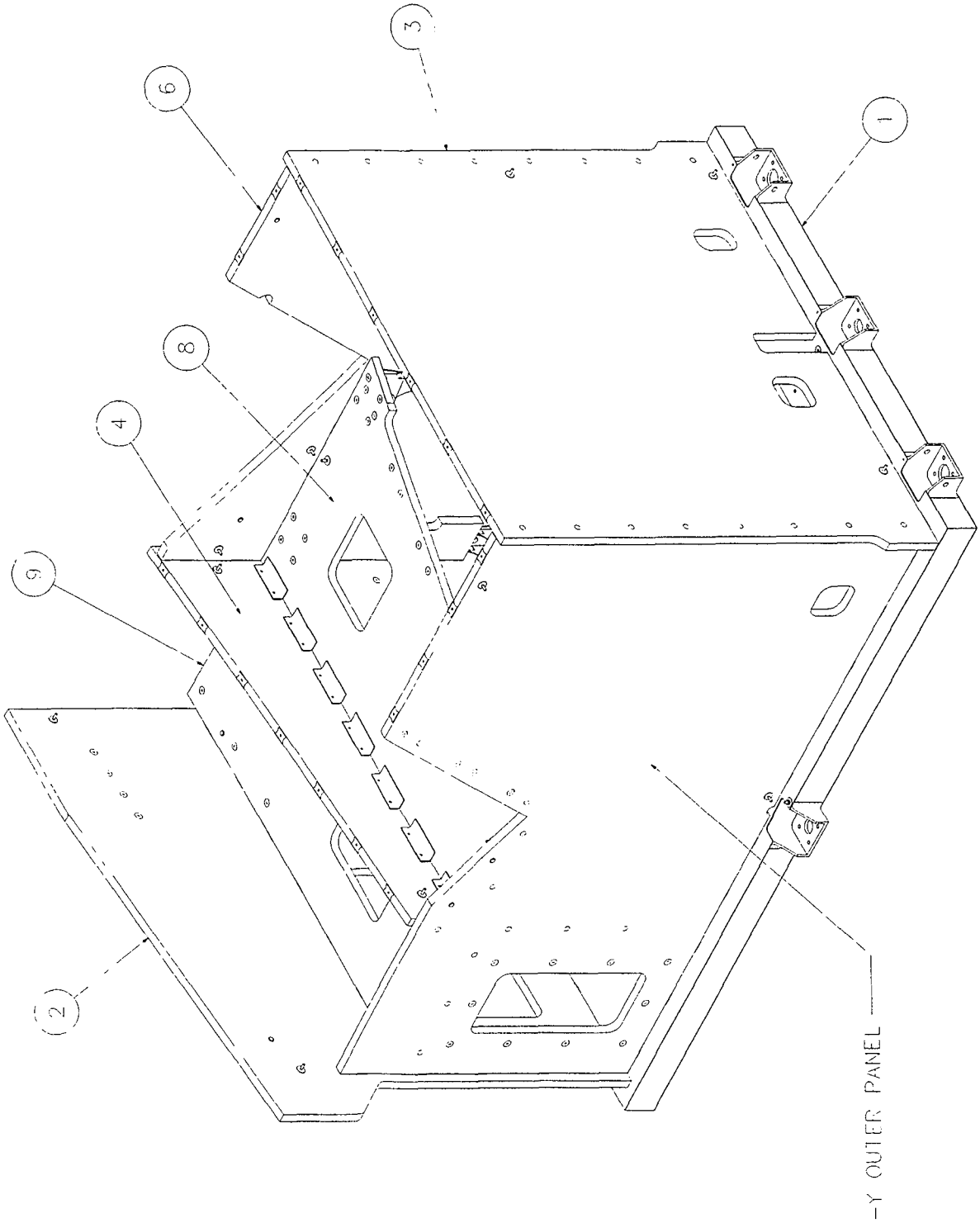

APPENDIX A1-6 ASSEMBLY OF THE -Y OUTER PANEL

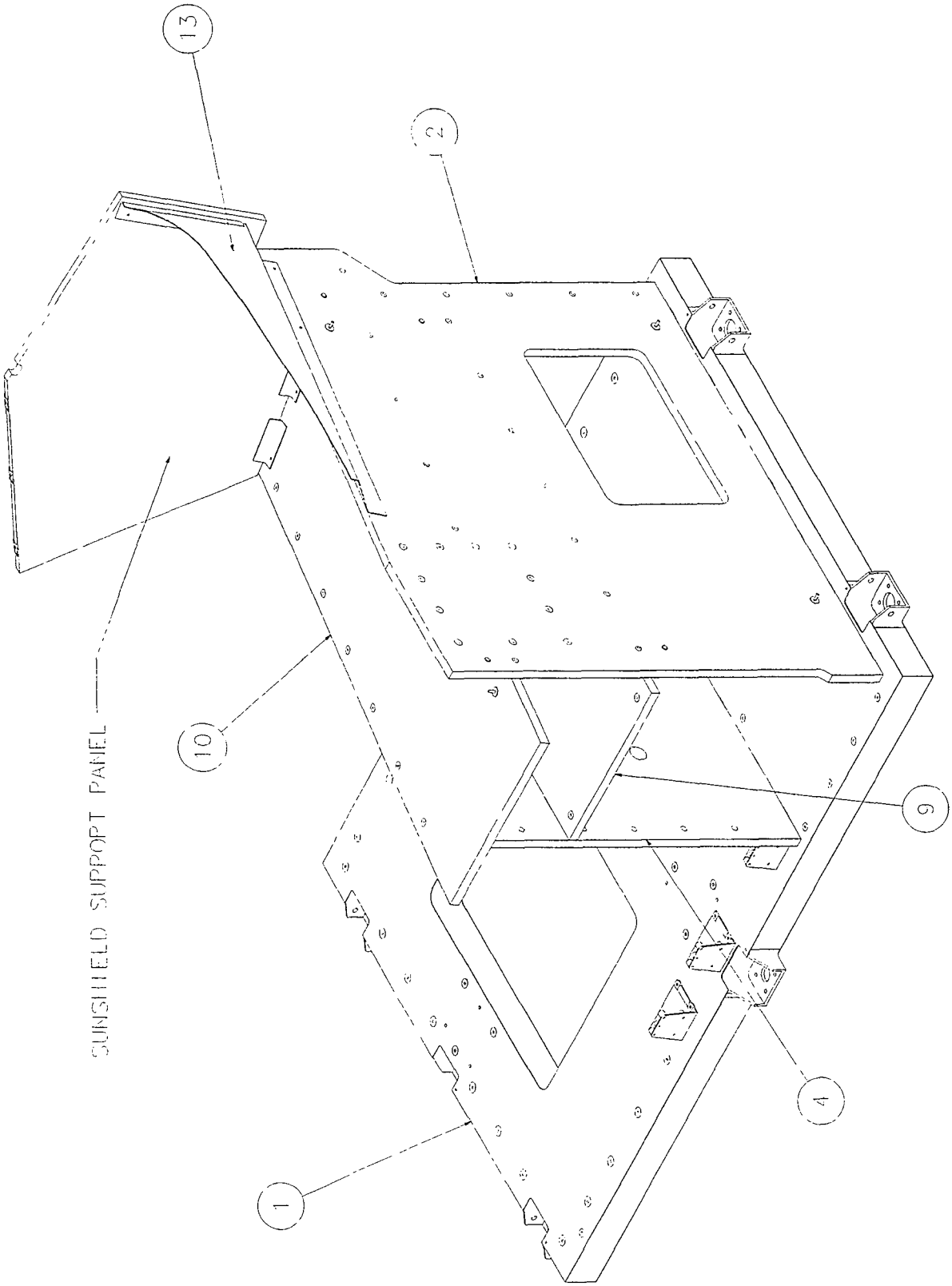

APPENDIX A1-7 ASSEMBLY OF THE SUNSHIELD SUPPORT PANEL

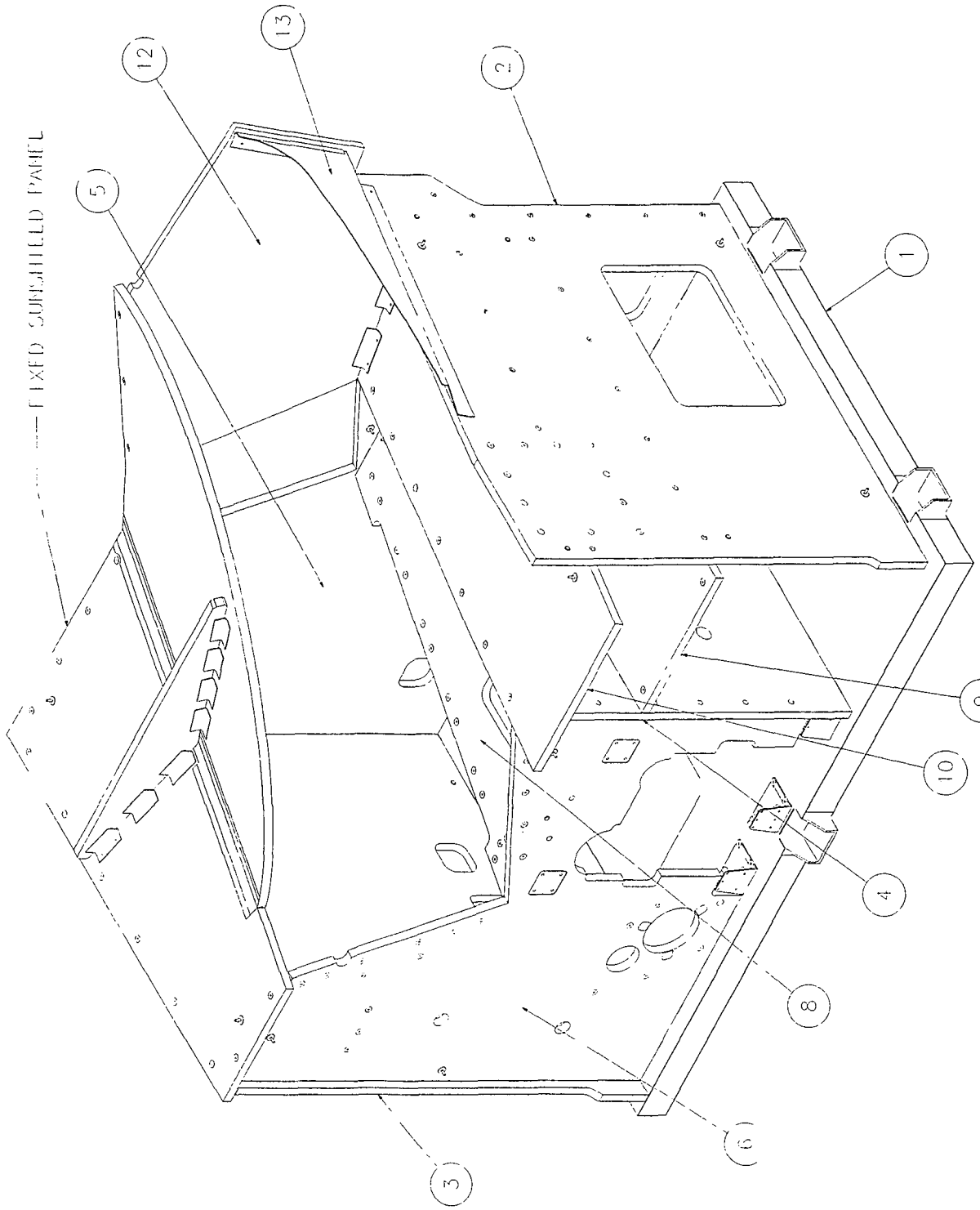

APPENDIX A1-8 ASSEMBLY OF FIXED SUNSHIELD PANEL

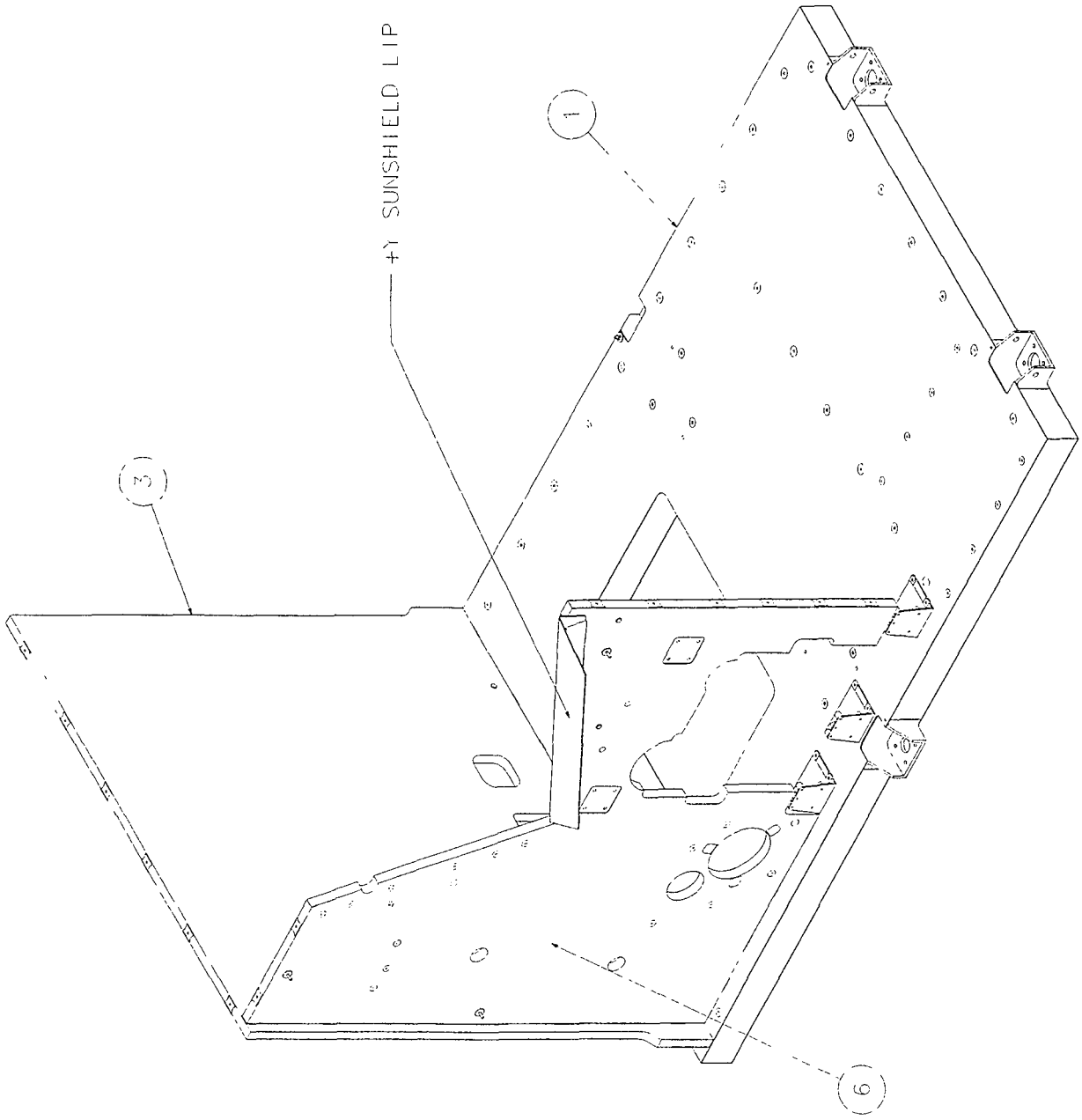

APPENDIX A1-9 ASSEMBLY OF THE +Y SUNSHIELD LIP

APPENDIX B

INTEGRATION OF THE SPACE VIEW APERTURE ASSEMBLY

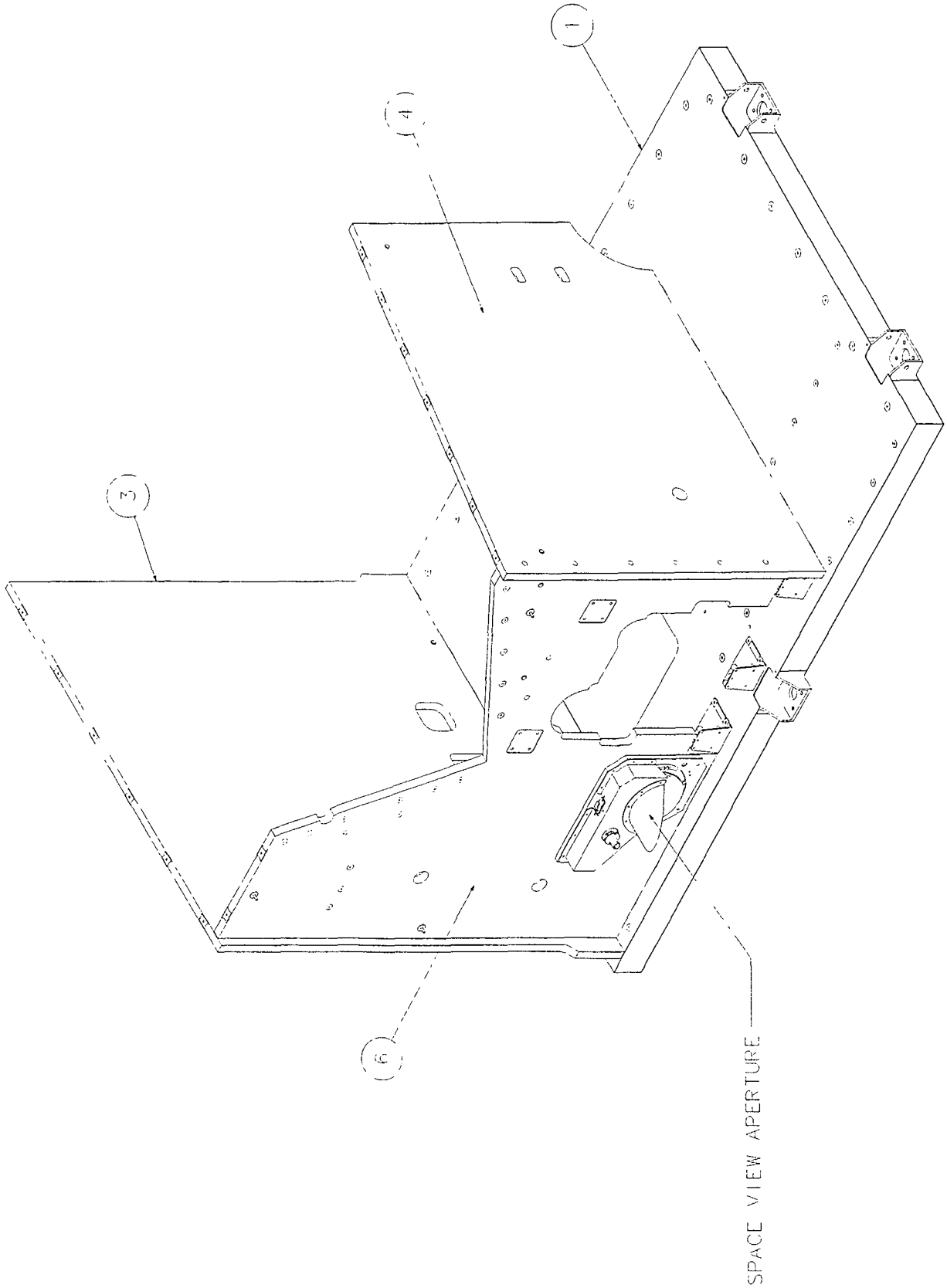

APPENDIX B1-1 ASSEMBLY OF THE SPACE VIEW APERTURE

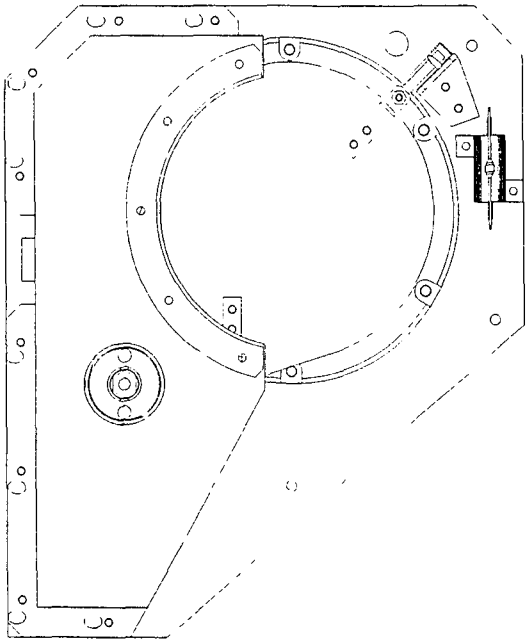

ASSEMBLY OF ALBEDO SHIELD

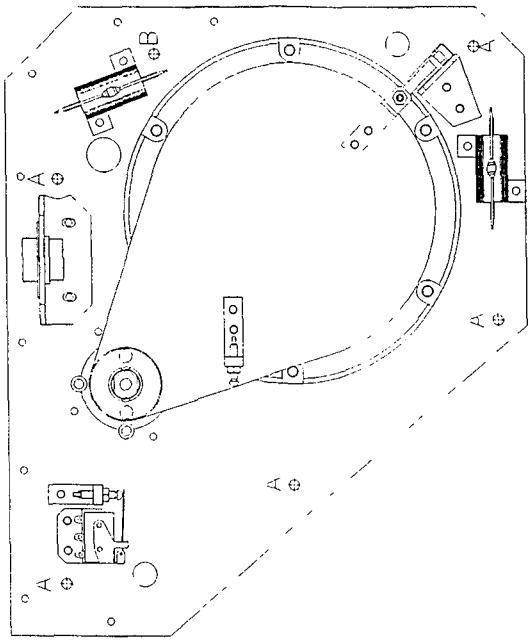

ASSEMBLY OF SVA

APPENDIX B1-2 ASSEMBLY OF SVA AND ALBEDO SHIELD

APPENDIX C

INTEGRATION OF THE SUNSHIELD DOOR AND APERTURE PLATE ASSEMBLY

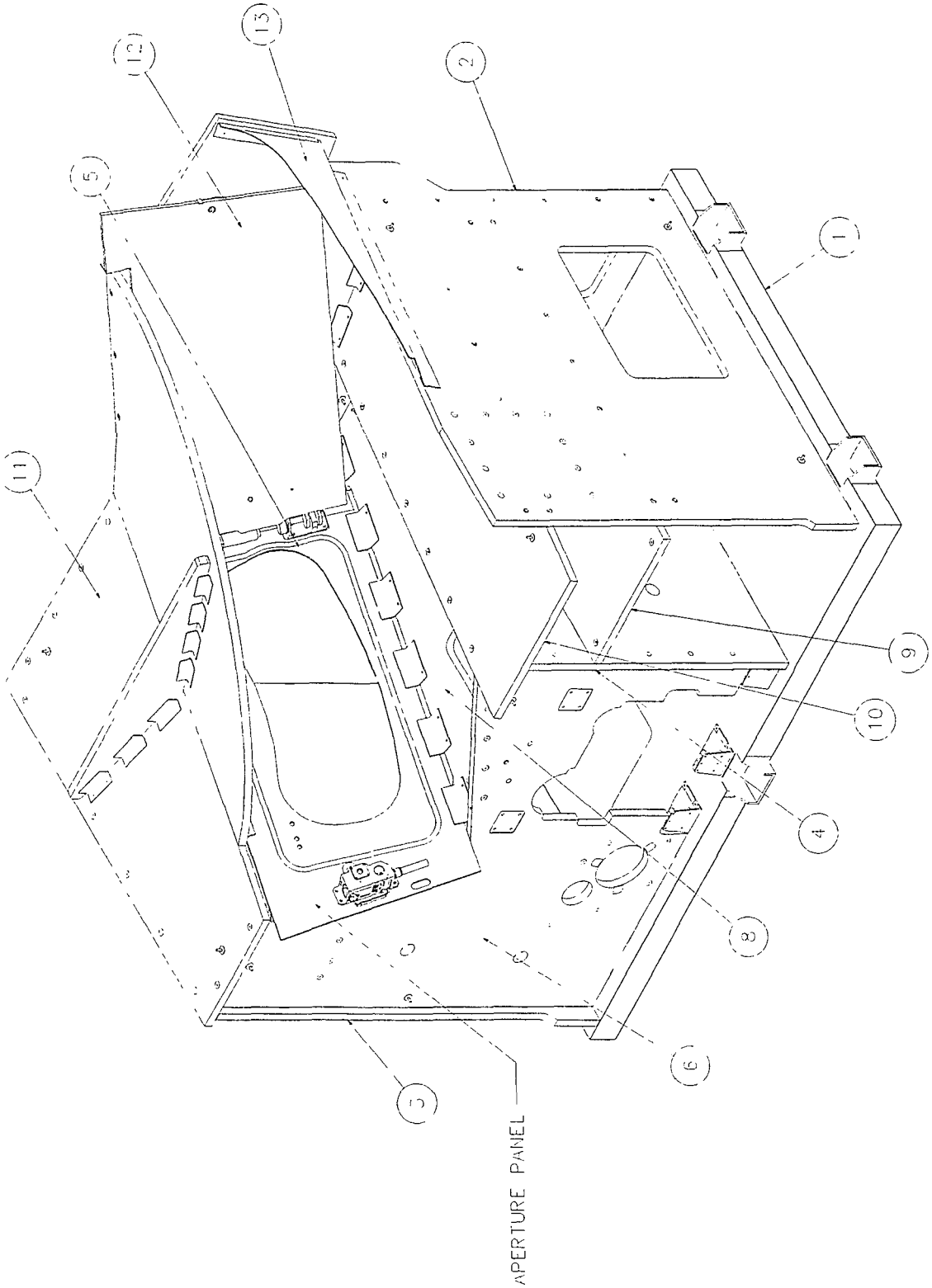

APPENDIX C1-1 ASSEMBLY OF THE APERTURE PLATE

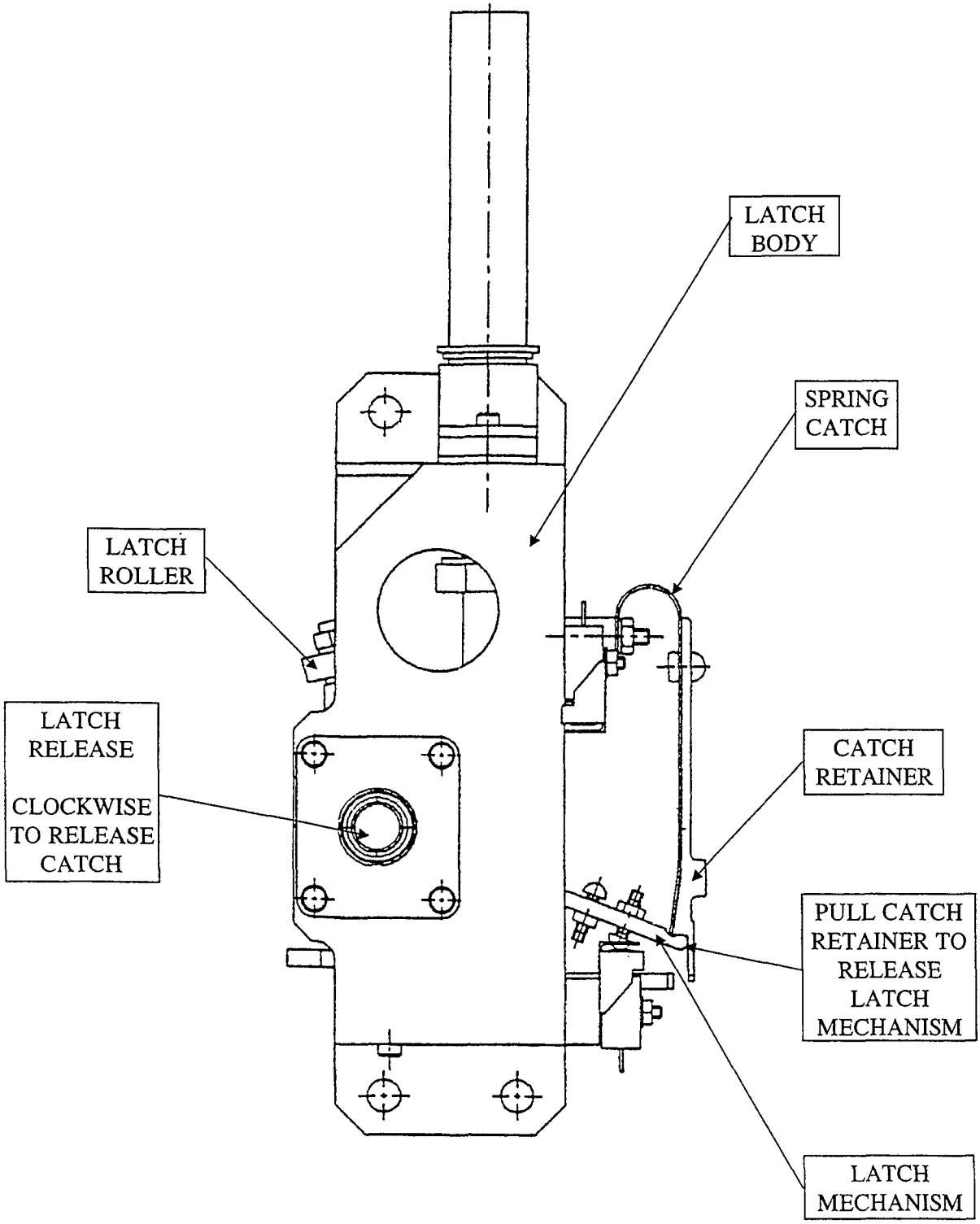

APPENDIX C1-2 VIEW OF DOOR LATCHING MECHANISM (SHOWN IN UNLATCHED POSITION

APPENDIX D

SHIM DETAILS

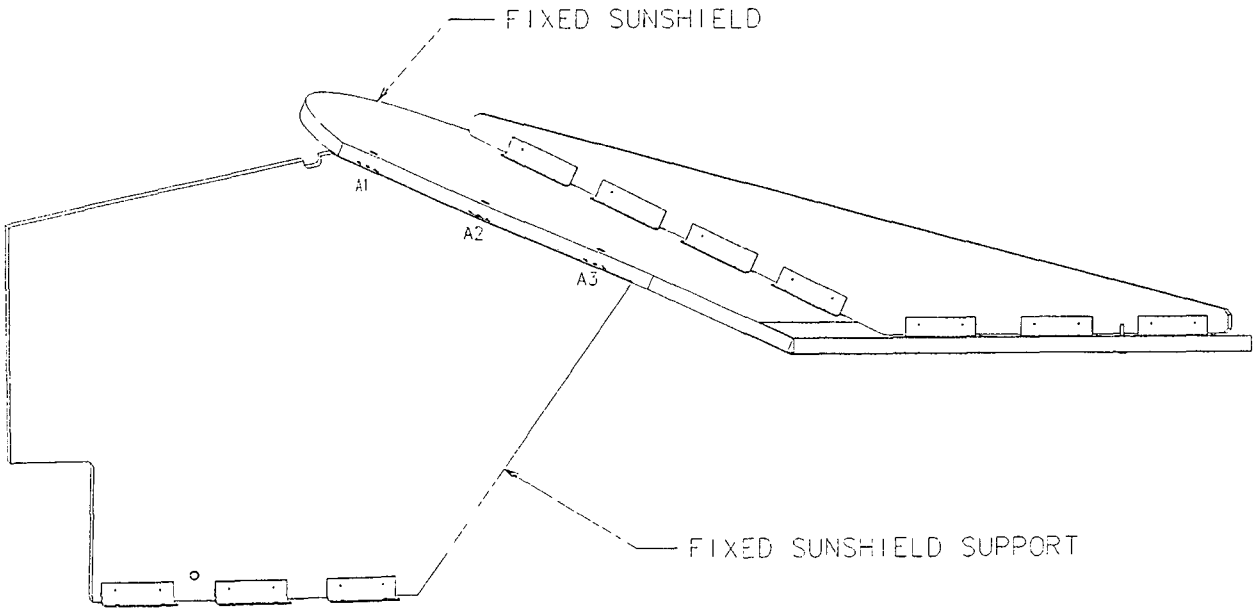

APPENDIX D1-1 SHIM DETAILS – FIXED SUNSHIELD SUPPORT

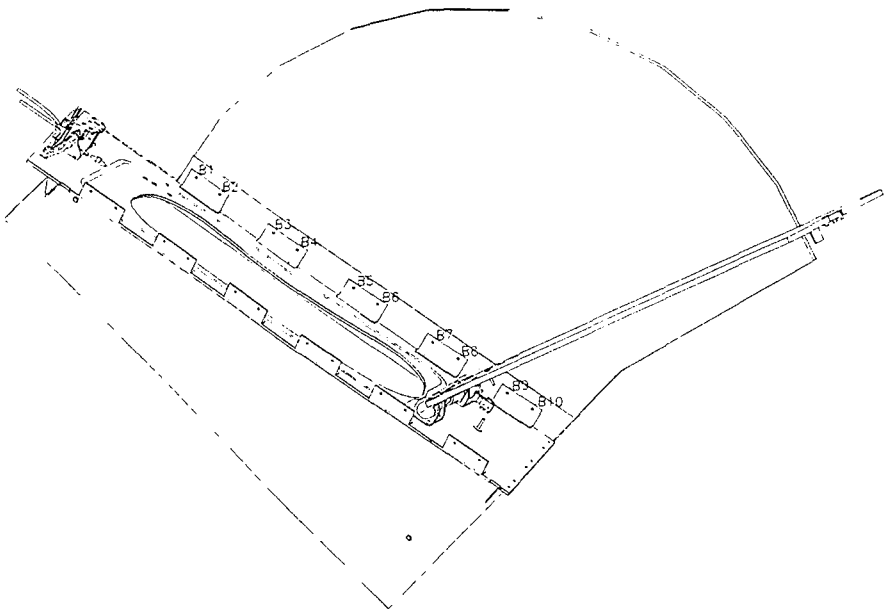

APPENDIX D1-2 SHIM DETAILS – SUNSHIELD APERTURE PLATE (VIEWED ON UNDERSIDE OF FIXED SUNSHIELD)

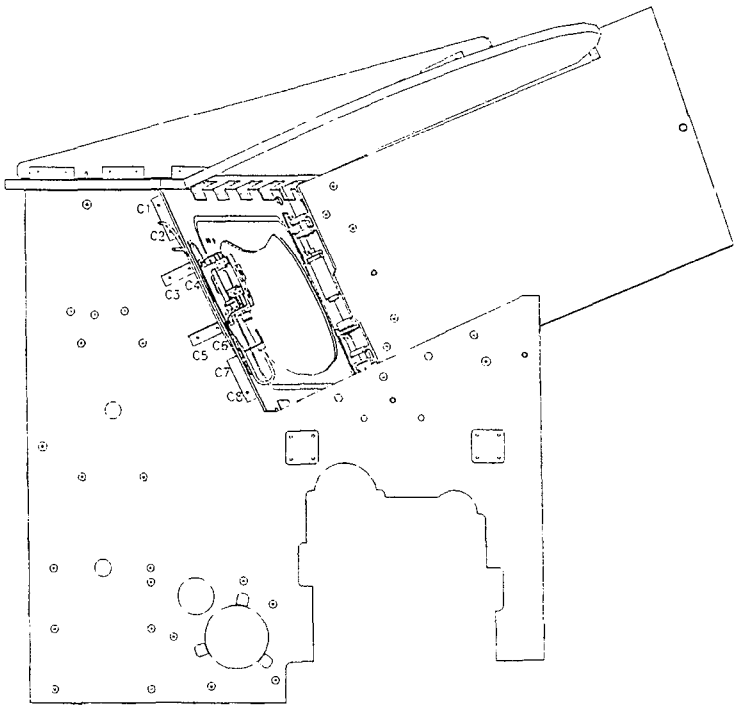

APPENDIX D1-3 SHIM DETAILS – SUNSHIELD APERTURE PLATE (VIEWED ON +Y PANEL SIDE)

DISTRIBUTION LIST

INTERNAL	EXTERNAL
I K Stewart	N Morris (RAL) (2)
N Crossland	One copy delivered with the STH assembly
A J Stewart	
T Forward	

CHANGE RECORD

CHANGE NUMBER	CLASS	CHANGE DETAILS	ISSUE
3164-00315	-	First Issue	1
3164-00347	II	Thermal hardware installation moved to a separate document and shim details added	2

ORIGINAL WHEN RED

Manual For SSH And SVA Test Equipment

Written By : J K. Watkins Date: 2/11/98
JK Watkins / I McMorine

Checked By : S Mitchell Date: 2-11-98
S Mitchell

Approved By : R.S Coupe Date: 2-11-98.
R. Coupe

Distribution :

R.Coupe	MMS Bristol
J.Watkins	MMS Bristol
I. Stewart	MMS Portsmouth
G.Topliss	RAL

© MATRA MARCONI SPACE UK LIMITED 1998

MATRA MARCONI SPACE UK LIMITED owns the copyright of this document which is supplied in confidence and which shall not be used for any purpose other than that for which it is supplied and shall not in whole or in part be reproduced, copied or communicated to any person without written permissions from the owner

MATRA MARCONI SPACE UK Limited,
PO Box 16, Filton, Bristol, BS12 7YB England

PAGE ISSUE RECORD

The current document comprises the following pages at the issues shown. This document has been Word Processed in file manual02.DOC dated 02/11/98 13:14.

Document	Page	Issue	Document	Page	Issue	Document
	All	1				

DOCUMENT CHANGE LOG

This document has the configuration status history shown.

Issue	Change No.	ECP No.	ECN No.	Revised Date	Affected Pages	Relevant Information
1	3164-00167				All	Initial Issue

TABLE OF CONTENTS

1 INTRODUCTION 5

1 1 PURPOSE 5
1 2 DEFINITIONS, ACRONYMS AND ABBREVIATIONS 5
1 3 REFERENCES 5

2 HARDWARE CONFIGURATION 6

2 1 DESCRIPTION 6
2 1 1 IEEE Controllable Power Supply 6
2 1 2 Prologue P200MMX Desktop Computer 6
2 1 3 National Semiconductor SCXI 1000 Rack 6
2 1 4 Cable Assembly Integrating TB01, TB02, TB03, TB04 6
2 1 5. Test Software 6
2 2 BLOCK DIAGRAMS 6

3. HARDWARE DEFINITION 8

3 1 SCXI RACK 8
3 1 1 SCXI-1100 32 CHANNEL ANALOGUE MULTIPLEXER 8
3 1 2 SCXI-1162 32 CHANNEL DIGITAL INPUT 8
3 1 3 SCXI-1160 16 RELAY CHANNELS 8
3 1 4 SCXI_1180/81 BASED STEPPER DRIVE BOARD 9
3 1 5 SCXI WIRING LIST 9
3 2 COMPUTER AND ACCESSORIES 9
3 2 1 COMPUTER 9
3 2 2 IEEE BOARD 10
3 2 3 DATA ACQUISITION BOARD 10
3 2 4 STEPPER CONTROL BOARD 10

4 SOFTWARE DEFINITION 11

4 1 OPERATING INSTRUCTIONS 11
4 1 1 SSH Stepper Motor Block 11
4 1 2 SSH Hot Wax Actuator Block 11
4 1 3 SSH Door Latch Indicator Block 12
4 1 4 SSH Door Position Indicator Block 12
4 1 5 SSH Door Potentiometer Block 12
4 1 6 SSH Thermistor Block 12
4 1 7 SSH Step Count Request Block 12
4 1 8 SSH Step Count Block 12
4 1 9 SSH Step Block 12
4 1 10 Voltage Selector Block 13
4 1 11 SSH Step Reset Block 13
4 1 12 SSH Step Calibrate Block 13
4 1 13 HIRDLS Calibrate Block 13
4 1 14 SVA Drive Motor Block 13
4 1 15 SVA Drive Monitor Block 13
4 1 16 SVA Door Position Indicator Block 13
4 1 17 SVA Motor Temperature 13
4 2 CALIBRATION PANEL 14
4 2 1 Thermistor Calibration 15
4 2 2 Stepper Motor values 15
4 2 3 Semiconductor Temperature Sensors 16
4 2 4 Maximum Supply Voltage and Current 16

5 SAFETY 17

5 1 EARTHING OF EQUIPMENT 17
5 2 MAINS OPERATING VOLTAGE 17
5.3 EMERGENCY OFF 17

5 4 PRECAUTIONS 17

6 TECHNICAL. 18

6 1 PERFORMANCE REQUIREMENTS 18
6 2 ENVIRONMENTAL CONSIDERATIONS . . . 18
6 3 PORTABILITY 18
6 4 RELIABILITY REQUIREMENTS 18
6 5 MAINTAINABILITY REQUIREMENTS 18
6 6 PHYSICAL 18
6 7 TRANSPORT 18

7 APPENDIX A 19

8 APPENDIX B . . .. .20

1. INTRODUCTION

1 1 PURPOSE

This manual briefly describes the test equipment designed to test the HIRDLS Sun Shield Subsystem (SSH) and the HIRDLS Space View Aperture (SVA)

The test equipment is designed to allow automatic and manual functional and life testing.

1 2 DEFINITIONS, ACRONYMS AND ABBREVIATIONS

HIRDLS High Resolution Dynamics Limb Sounder
SSH : Sun Shield Subsystem
SVA Space View Aperture

1 3 REFERENCES

Ref	Applicable document	Issue	Title
1	SP-HIR-227	Draft	SSH to IPS Interface Control Document (ICD)
2	SP-MMS-354	1	Procurement Specification for a Redundant Stepper Motor/Gearhead Unit

2. HARDWARE CONFIGURATION

2 1. DESCRIPTION

The test equipment consists of the following elements which are shown in Figure 2.1

2 1 1 IEEE Controllable Power Supply

IEEE controllable power supply and associated mains and IEEE cable (Hewlett Packard 6654A, 60V, 9A)

2 1 2 Prologue P200MMX Desktop Computer

Prologue P200MMX Desktop Computer fitted with the following proprietary boards -

1 IEEE Controller Board, National Instruments

2 Data Acquisition Board, National Semiconductor AT-MIO E Series

3 Stepper Controller Board, National Semiconductor pcStep 4A and associated ribbon cable

2 1.3 National Semiconductor SCXI 1000 Rack

National Semiconductor SCXI 1000 Rack containing the following boards and terminal blocks .-

1 SCXI 1100 32 channel analogue multiplexer board with SCXI 1300 terminal block unit designated TB01

2 SCXI 1162 32 channel digital input board with SCXI 1301 terminal block designated TB02.

3 SCXI 1160 16 channel relay board with SCXI 1324 terminal block designated TB03

4. SCXI 1181 breadboard module with stepper drive circuitry, reference voltages, current limit circuitry and SCXI 1301 terminal block designated TB04.

2 1 4 Cable Assembly Integrating TB01, TB02, TB03, TB04

Cable assembly integrating TB01, TB02, TB03, TB04, J211P, J212P and J221P, thereby interfacing the test equipment with the SSH and SVA prime equipment's.

2 1.5 Test Software

Test software written using National Instruments Labview version 5.0 1

2 2 BLOCK DIAGRAMS

A block diagram of the test equipment is shown on the next page

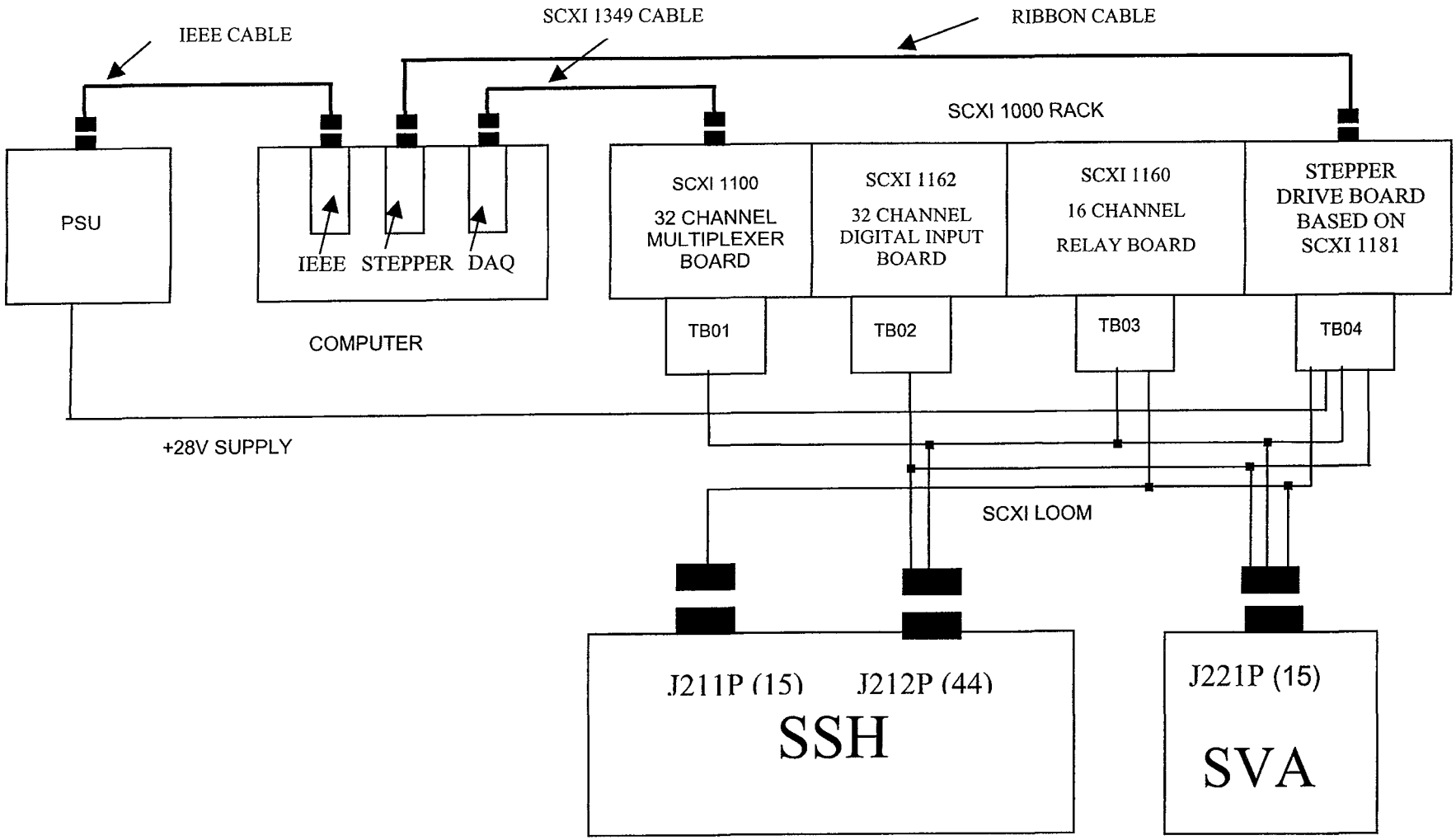
IEEE CABLE
SCXI 1349 CABLE
RIBBON CABLE
SCXI 1000 RACK
PSU
IEEE
STEPPER
DAQ
COMPUTER
SCXI 1100
32 CHANNEL MULTIPLEXER BOARD
SCXI 1162
32 CHANNEL DIGITAL INPUT BOARD
SCXI 1160
16 CHANNEL RELAY BOARD
STEPPER DRIVE BOARD BASED ON SCXI 1181
TB01
TB02
TB03
TB04
+28V SUPPLY
SCXI LOOM
J211P (15)
J212P (44)
SSH
J221P (15)
SVA

3. HARDWARE DEFINITION

3 1 SCXI RACK

3 1 1 SCXI-1100 32 CHANNEL ANALOGUE MULTIPLEXER

This is a standard National Conductor SCXI board used to interface with the Unit Under Test (UUT) thermistor and constant current temperature sensors

1. The SCXI 1300 Terminal Block Unit, TB01, is used to connect the board to the other SCXI boards in the rack and to the UUT.

2 The wiring of TB01 is described in section 3 1 5

3 Temperature sensor and thermistor conditioning resistors are included in the TB01 assembly

3 1 2 SCXI-1162 32 CHANNEL DIGITAL INPUT

This is a standard National Conductor SCXI board used to interface with the UUT micro-switches

1 The SCXI 1301 Terminal Block Unit, TB02, is used to connect the board to the other SCXI boards in the rack and to the UUT

2 The wiring of TB02 is described in section 3 1 5.

3 Pull-up resistors are included in the TB02 assembly.

3 1 3. SCXI-1160 16 RELAY CHANNELS

This is a standard National Conductor SCXI board used to switch power supplies and configure the test equipment

The SCXI 1324 Terminal Block Unit, TB03, is used to connect the board to the other SCXI boards in the rack and to the UUT.

The wiring of TB03 is described in section 3 1.5

3 1 4 SCXI_1180/81 BASED STEPPER DRIVE BOARD

This is a standard National Conductor SCXI breadboard module containing the following circuitry -

1 three phase stepper motor drive circuitry.

2 2 ampere fold-back current limit

3 three over voltage protections, SSH stepper, SSH Hot Wax Actuator and SVA motor.

4 three 10V voltage references for analogue conditioning purposes on the SCXI-1100 32 Channel Analogue Multiplexer

5. one 5V dc-dc power converter for use by the board

6 one 5V dc-dc power converter for use by the SCXI-1162 32 Channel Digital Input Board

The SCXI 1301 Terminal Block Unit, TB04, is used to connect the board to the other SCXI boards in the rack and to the UUT.

The wiring of TB04 is described in section 3.1 5

A circuit diagram, layout and parts list is attached to this manual as Appendix A.

3 1 5 SCXI WIRING LIST

A wiring list of the SCXI loom is given in Appendix B which is attached to this manual

The loom connects the following items -

- TB01
- TB02
- TB03
- TB04
- P211S, 15 way socket which mates with SSH/J211P
- P212S, 44 way socket which mates with SSH/J212P
- P221S, 15 way socket which mates with SVA/J221P.
- Power Supply Unit

3 2 COMPUTER AND ACCESSORIES

3 2 1 COMPUTER

A Prologue Pentium desk top computer is used to run the test equipment software.

The computer is fitted with three internal boards -

- IEEE Board
- Data Acquisition Board
- Stepper Control Board

3.2 2. IEEE BOARD

The IEEE board allows the computer to automatically control the power supply to :-

- Set output voltage
- Set output current limit
- Switch the output on and off when necessary

A standard IEEE cable is used to connect the PSU to the computer

It should be noted that the power supply output is always switched off before reconfiguring any of the SCXI relays In this manner the stress on the relays is minimised and the relay life is maximised

3 2 3 DATA ACQUISITION BOARD

The Data Acquisition Board, National Semiconductor AT-MIO E Series, interfaces with the SCXI rack via a National Semiconductor SCXI 1349 cable

3 2.4 STEPPER CONTROL BOARD

The Stepper Controller Board, National Semiconductor pcStep 4A interfaces with SCXI_1180/81 based stepper drive board via a ribbon cable

It should be noted that the red stripe on the ribbon cable should be at the top

4. SOFTWARE DEFINITION

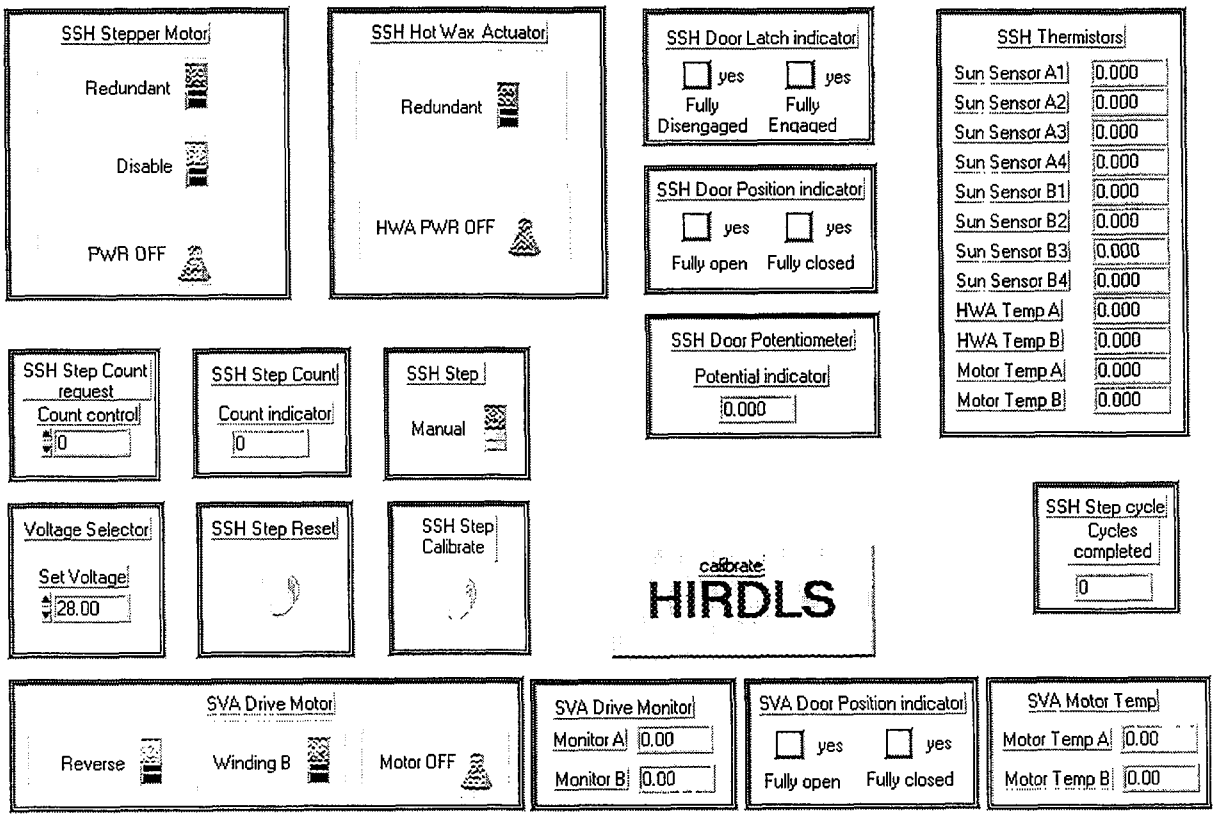

Fig 4 0-1 HIRDLS main operating panel

4.1 OPERATING INSTRUCTIONS

A picture of the normal operating screen is shown in Figure 4 0-1.

The screen is broken down into the following functional blocks :-

4 1 1 SSH Stepper Motor Block

- 'Redundant/Prime' Selector Switch . selects prime or redundant stepper motor winding
- 'Disable/Enable' Selector Switch · enables and disables the outputs of the stepper drive amplifier
- 'PWR ON/PWR OFF' Selector Switch switches PSU power to the stepper drive circuitry

4 1 2 SSH Hot Wax Actuator Block

- 'Redundant/Prime' Selector Switch selects prime or redundant hot wax heater winding
- 'HWA PWR ON/HWA PWR OFF' Selector Switch . switches PSU power to the HWA circuitry

4 1.3 SSH Door Latch Indicator Block

- 'Fully Disengaged Yes/No' : 'Yes' indicates fully disengaged, 'No' indicates not fully disengaged and a flashing indicator signifies a fault
- 'Fully Engaged Yes/No' : 'Yes' indicates fully engaged, 'No' indicates not fully engaged and a flashing indicator signifies a fault.

4 1 4 SSH Door Position Indicator Block

- 'Fully Open Yes/No' . 'Yes' indicates fully open, 'No' indicates not fully open and a flashing indicator signifies a fault.
- 'Fully Closed Yes/No' 'Yes' indicates fully closed, 'No' indicates not fully closed and a flashing indicator signifies a fault

4 1 5 SSH Door Potentiometer Block

- Indicates the voltage on the door position potentiometer. It has a overall range of 0V to +10V

4 1 6 SSH Thermistor Block

- Sun Sensor A1 calibrated in °C for a 12 k Ohms thermistor
- Sun Sensor A2 . calibrated in °C for a 12 k Ohms thermistor
- Sun Sensor A3 calibrated in °C for a 12 k Ohms thermistor
- Sun Sensor A4 Not fitted, ignore reading
- Sun Sensor B1 calibrated in °C for a 12 k Ohms thermistor.
- Sun Sensor B2 calibrated in °C for a 12 k Ohms thermistor.
- Sun Sensor B3 : calibrated in °C for a 12 k Ohms thermistor
- Sun Sensor B4 Not fitted, ignore reading.
- HWA Temp A calibrated in °C for an AD590 temperature sensor
- HWA Temp B calibrated in °C for an AD590 temperature sensor
- Motor Temp A calibrated in °C for an AD590 temperature sensor
- Motor Temp B : calibrated in °C for an AD590 temperature sensor

4 1 7 SSH Step Count Request Block

- allows manual loading of desired step count which is initiated when the 'enter' is pressed Note that stepper power and enable switches must be in an operational position for correct operation. One step count equals 0.1 mechanical degrees of door movement with positive being in the direction of the opening door

4.1.8. SSH Step Count Block

- Displays the current step count

4 1 9 SSH Step Block

- Allows selection of manual or automatic step count control Automatic step control is used for life testing in the thermal vacuum chamber

4 1.10. Voltage Selector Block

- Allows the PSU voltage to be set, via the IEEE bus, from the computer front panel.

4 1 11 SSH Step Reset Block

- Resets the counter on the stepper drive board to its reference position at zero electrical degrees.

4 1.12 SSH Step Calibrate Block

- Allows the initiation of the automatic calibration of the door potentiometer against stepper motor steps

4 1 13 HIRDLS Calibrate Block

- Allows thermistor data to be added
- See section on CALIBRATION PANEL

4 1 14 SVA Drive Motor Block

- 'Reverse/Forward' Selector Switch selects reverse or forward SVA motor operation
- 'Winding A/Winding B' Selector Switch · selects SVA motor winding.
- 'Motor ON/Motor OFF' Selector Switch switches PSU power to the SVA motor.

4.1.15. SVA Drive Monitor Block

- Monitor A displays the SVA motor voltage after the 'Motor ON/Motor OFF' switch but before the 'Reverse/Forward' and 'Winding A/Winding B' switches
- Monitor B · not used.

4 1 16 SVA Door Position Indicator Block

- 'Fully Open Yes/No' 'Yes' indicates fully open, 'No' indicates not fully open and a flashing indicator signifies a fault
- 'Fully Closed Yes/No' · 'Yes' indicates fully closed, 'No' indicates not fully closed and a flashing indicator signifies a fault

4 1 17 SVA Motor Temperature

- Motor Temp A : calibrated in °C for an AD590 temperature sensor.
- Motor Temp B calibrated in °C for an AD590 temperature sensor

4.2. CALIBRATION PANEL

While the application is running HIRDLS Calibrate Enable button pulls up the "Calibration Panel" and is shown in the figure below. Each of the variables may be changed by selection with the mouse pointer or typing the value in directly The values will not affect the real values stored as a file or as a global value until the close button is pressed. A dialogue box is opened in which acceptance or rejection of the values just typed in can be given If the reject button is pressed all the values just typed in will be ignored reverting back to the original set of values displayed and the "Calibration Panel" will exit However, if the accept button is pressed, all values that have been changed will modify both the global store and the calibration file

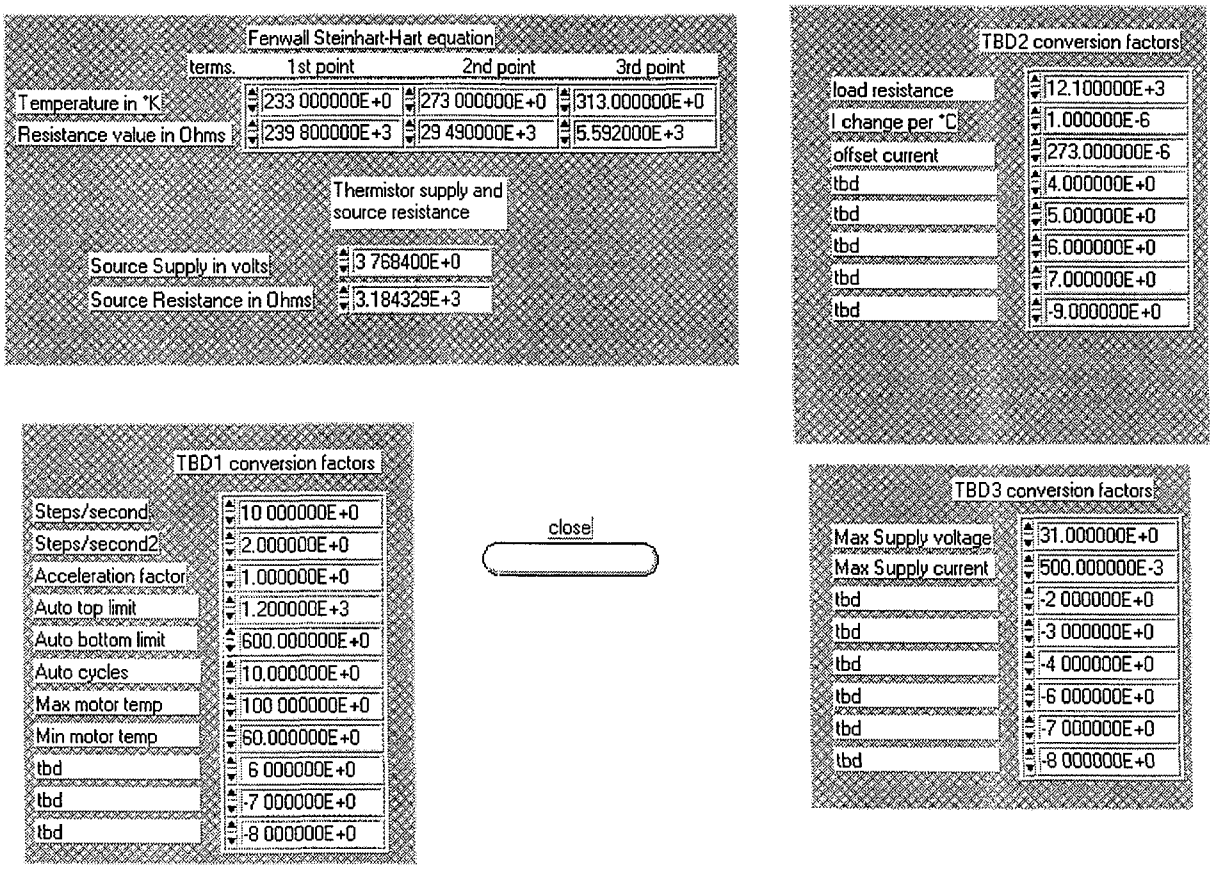

Fig 4 2 -1 HIRDLS Calibration panel

4 2.1 Thermistor Calibration

The thermistors that are being used are all assumed to be of similar type with respect to their resistance characteristics. Calibration of the thermistor is achieved by supplying the published resistance values at three temperatures, the supply voltage and the supply source resistance The values are entered into the panel and the close button is pressed accepting the change in the panel values.
Within the software an equation known as the "Steinhart-Hart equation", which was supplied by Fenwall, has been used to model the thermistor characteristics and provides a very good approximation to the published data (<0 1°C error over the range -55°C to +100°C) The table below shows the values for the 15kΩ Fenwall thermistor

	1st point	2nd point	3rd point
Temperature	233°K	273°K	313°K
Resistance value	239 8kΩ	29 49kΩ	5.592kΩ

In addition to the 3 point calibration, the value of the conditioning resistor and the conditioning voltage in the EGSE are entered

These values are:

Source Supply Voltage	3.768
Conditioned Resistance	3.184kΩ

4 2 2 Stepper Motor values

The stepper motor is set up in the "TBD1 conversion factor" array area and are as follows -

Steps/second	This is the stepping rate per second.
Steps/second 2	Acceleration, how fast the step rate is attained.
Acceleration factor	see the manual for greater detail.
Auto top limit	This is the number of 0.1 degree steps and is an absolute value from zero. Zero degrees is when the door is fully closed. All positive values in degrees represent the door open
Auto bottom limit	This is similar to the "Auto top limit" but it is the bottom value.
Auto cycles	This is the number of cycles the door goes into the open position within an automatic test Once a test is initiated it will automatically finish when it has completed the correct number of cycles Or it can be stopped with the front panel abort button at the top left hand side of the screen
Max motor temp	This is the upper temperature limit at which the stepper drive will be removed
Min motor temp	This is the lower temperature limit at which the stepper will start to operate once the upper limit has been exceeded

4 2 3 Semiconductor Temperature Sensors

The semiconductor temperature sensors are defined in "TBD2 conversion factors" and are as follows -

load resistance	This is the load resistance that is used to monitor the temperature dependant current from the sensor (Fixed at 12 1k Ohms)
I change per °C	The sensor current change per °C The device characteristics are set at 1uA per °C
offset current	If and offset exists this parameter can be used to cancel it out However, to convert the display from °K to °C set the offset to 273uA (Present setting)

4 2 4 Maximum Supply Voltage and Current

The programmable supply can have the maximum voltage and current set as follows -

Max Supply voltage	This sets the over voltage trip within the programmable power supply and is currently set at 31volts
Max Supply current	This sets the over current trip within the programmable power supply and is currently set at 0.5 Amps

5. SAFETY

In order to prevent danger and/or injury, personnel must be qualified to a competent test engineering standard and they should be aware of the following potential hazards and be familiar with the general safety regulations where applicable to electrical equipment

5 1 EARTHING OF EQUIPMENT

Ensure that Test Equipment is earthed to any externally connected units

5 2 MAINS OPERATING VOLTAGE

The Test Set operates with the following mains supply specification

Voltage 220V
Frequency 50Hz

5 3 EMERGENCY OFF

Not applicable

5 4 PRECAUTIONS

1 Always ensure ribbon cable from the back of computer to the SCXI rack has red stripe at the top.

2 When connecting power supply double check polarity The red wire should be positive Protection has been provided against incorrect polarity but it is best not to use it

3 Switch on in the following order :-
- Computer
- SCXI rack
- Power Supply Unit when software running

6. TECHNICAL

6 1 PERFORMANCE REQUIREMENTS

Performance requirements consistent with Applicable Documents reference 1 and 2

6 2 ENVIRONMENTAL CONSIDERATIONS

The EGSE shall be operated within the temperature limits 22 ± 3°C and a humidity range 50±10% and a cleanliness class of 100,000 or better.

6.3 PORTABILITY

The constituent parts of the PC are consistent with normal office equipment handling

6 4 RELIABILITY REQUIREMENTS

None specified

6 5 MAINTAINABILITY REQUIREMENTS

When not in use the EGSE shall be bagged in polythene with a desiccant drying agent inside
Storage shall be in temperatures 10° - 30°C

6 6 PHYSICAL

Mass	PC + Monitor	31kg
	Main Rack	6 kg
	Keyboard	0.5 kg
	Power Supply	22 kg
	Cables	1 kg

Dimensions	PC	165mm x 419mm x 419mm
	Monitor	419mm x 419mm x 432mm
	Main Rack	438mm x 212mm x 176mm
	Keyboard	38mm x 457mm x 165mm
	Power Supply	420mm x 495mm x 127mm
	Cables	2000mm to 3000mm

6 7 TRANSPORT

TBD by customer

7. APPENDIX A

STEPPER DRIVE BOARD

- Circuit Diagram
- Layout
- Parts List

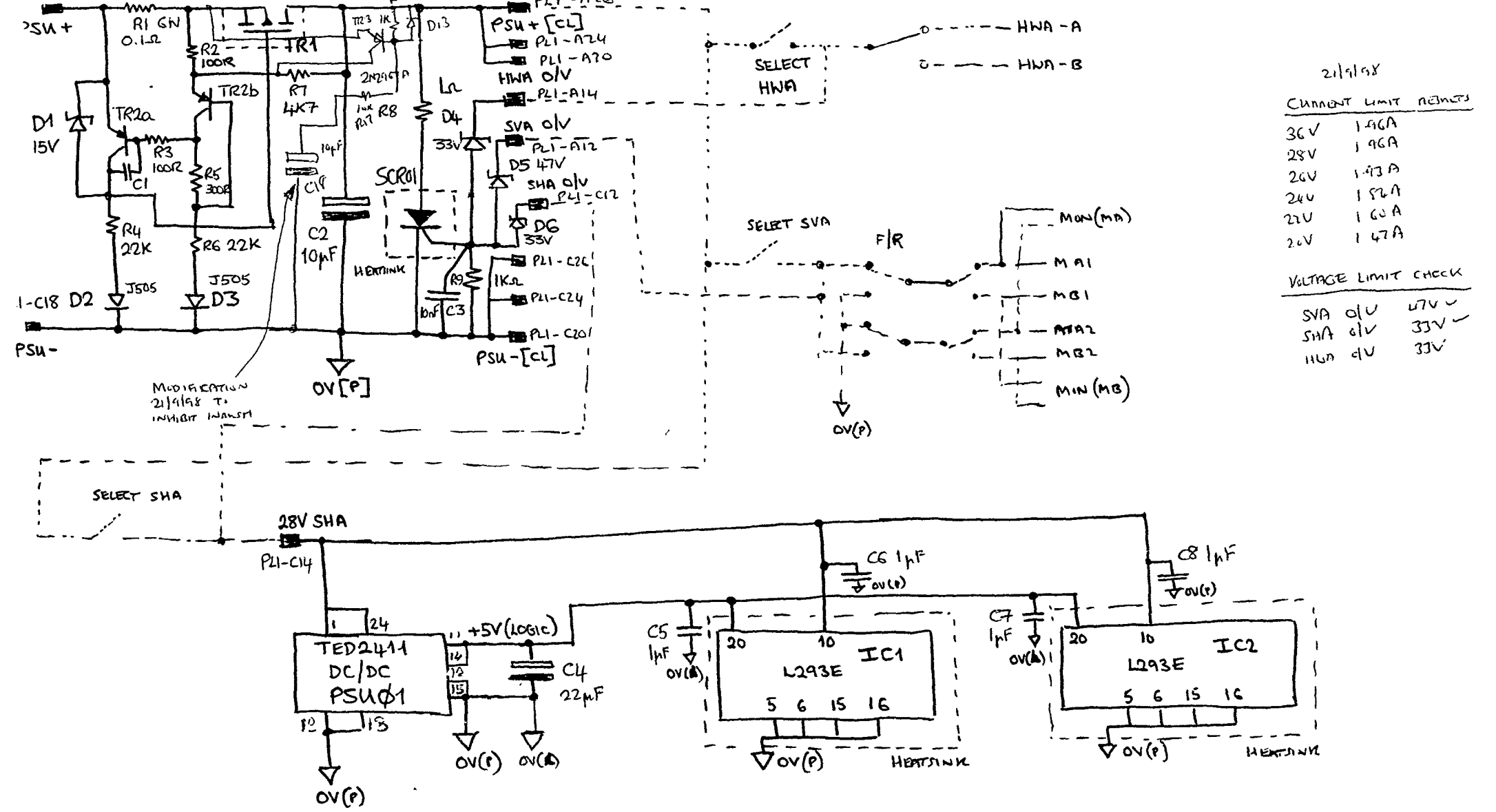

21/9/98

CURRENT LIMIT	RESULTS
36V	1.96A
28V	1.96A
26V	1.93A
24V	1.82A
22V	1.60A
20V	1.47A

VOLTAGE LIMIT CHECK

SVA	0V	47V ✓
SHA	0V	33V ✓
HWA	0V	33V

SHEET 1 OF 3

JIM WATKINS 27/8/98

CIRCUIT DIAGRAM OF STEPPER DRIVE CIRCUITRY + CURRENT LIMIT

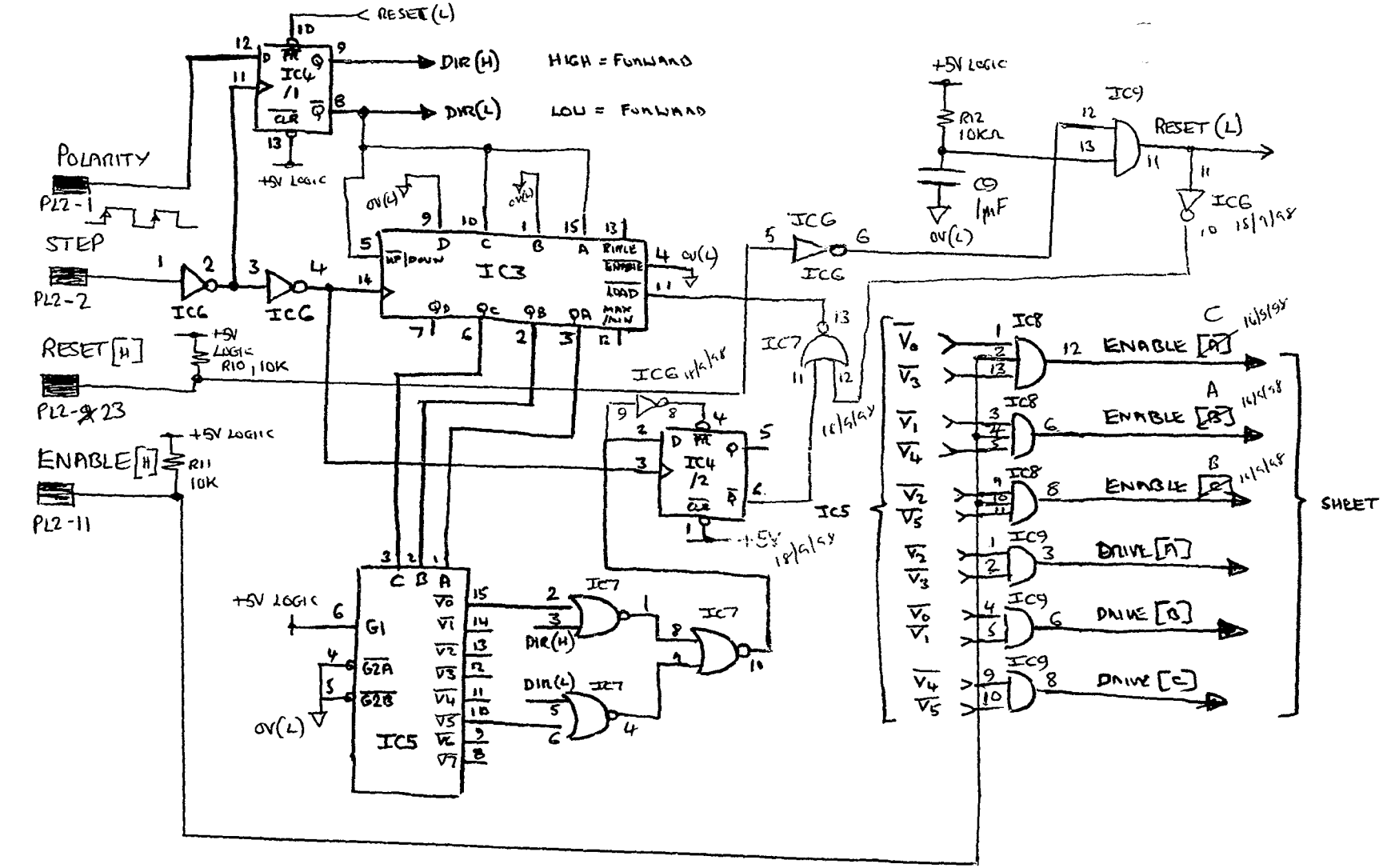

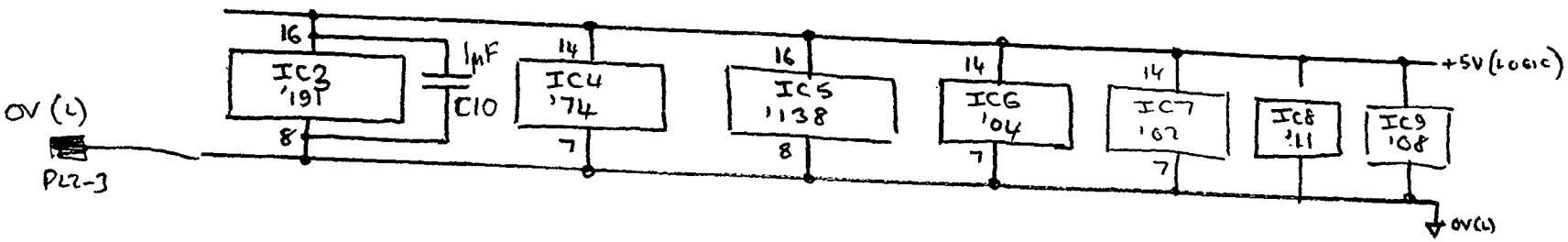

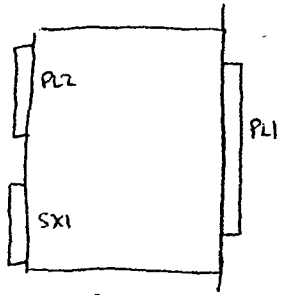

PIN ALLOCATION

1	PSU +VE	PL1 - A18
2	PSU -VE	PL1 - C18
3	PSU +VE (CL)	PL1 - A26
4	PSU +VE (CL)	PL1 - A24
5	PSU +VE (CL)	PL1 - A20
6	PSU -VE (CL)	PL1 - C26
7	PSU -VE (CL)	PL1 - C24
8	PSU -VE (CL)	PL1 - C20
9	HWA 0/V	PL1 - A14
10	SVA 0/V	PL1 - A12
11	SHA 0/V	PL1 - C12
12	+28V SHA	PL1 - C14
13	POLARITY	PL2 - 1
14	STEP	PL2 - 2
15	RESET (H)	PL2 - 9
16	ENABLE (H)	PL2 - 11
17	PHASE A	PL1 - A32
18	PHASE B	PL1 - A30
19	PHASE C	PL1 - C32
20	+5V (DIG)	PL1 - A6
21	0V (DIG)	PL1 - C6
22	+10V (POT)	PL1 - A5 *
23	0V (POT)	PL1 - C5 *
24	+10V (THERM)	PL1 - A4 *
25	0V (THERM)	PL1 - C4 *
26	+10V (AD590)	PL1 - A3 *
27	0V (AD590)	PL1 - C3 *
28	0V (L)	PL2 - 3

* GLUE ON TERMINAL BLOCKS

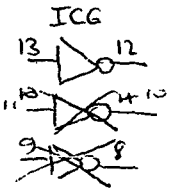

J K Watkins 27/8/98

SHEET 2 OF 3

CIRCUIT DIAGRAM OF STEPPER MOTOR CIRCUITRY

+ CURRENT LIMIT

DW

SHEET 2

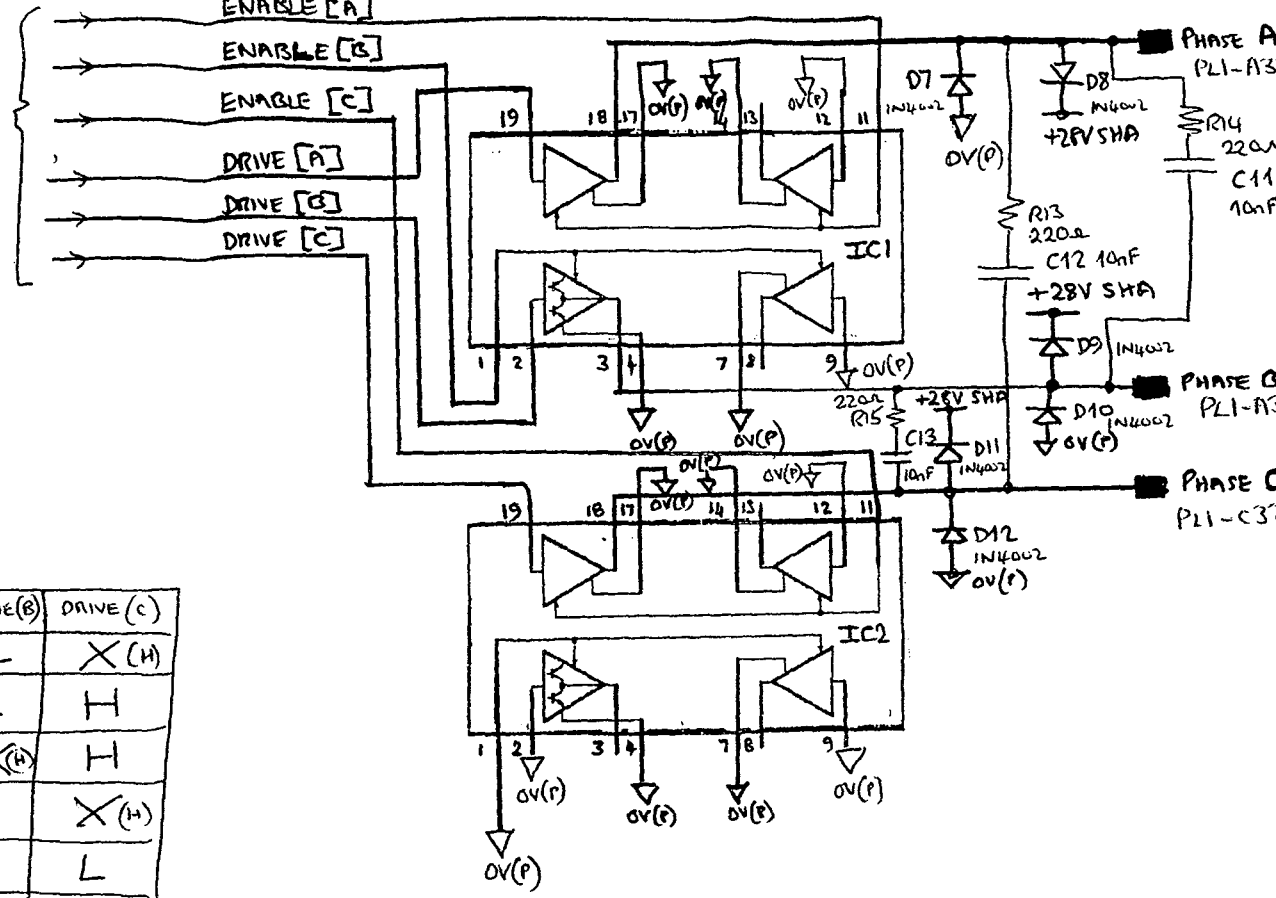

TRUTH TABLE

STEP	A	B	C	ENABLE(A)	ENABLE(B)	ENABLE(C)	DRIVE(A)	DRIVE(B)	DRIVE(C)
1	+	−	N/C	H	H	L	H	L	X (H)
2	N/C	−	+	L	H	H	X (H)	L	H
3	−	N/C	+	H	L	H	L	X (H)	H
4	−	+	N/C	H	H	L	L	H	X (H)
5	N/C	+	−	L	H	H	X (H)	H	L
6	+	N/C	−	H	L	H	H	X (H)	L

X = DO NOT CARE

IF ENABLE = L THEN ENABLE [A] [B] [C] = LOW

A4

J. K WATKINS 27/8/98

SHEET 3 OF 3

CIRCUIT DIAGRAM OF STEPPER DRIVE CIRCUITRY + CURRENT LIMIT

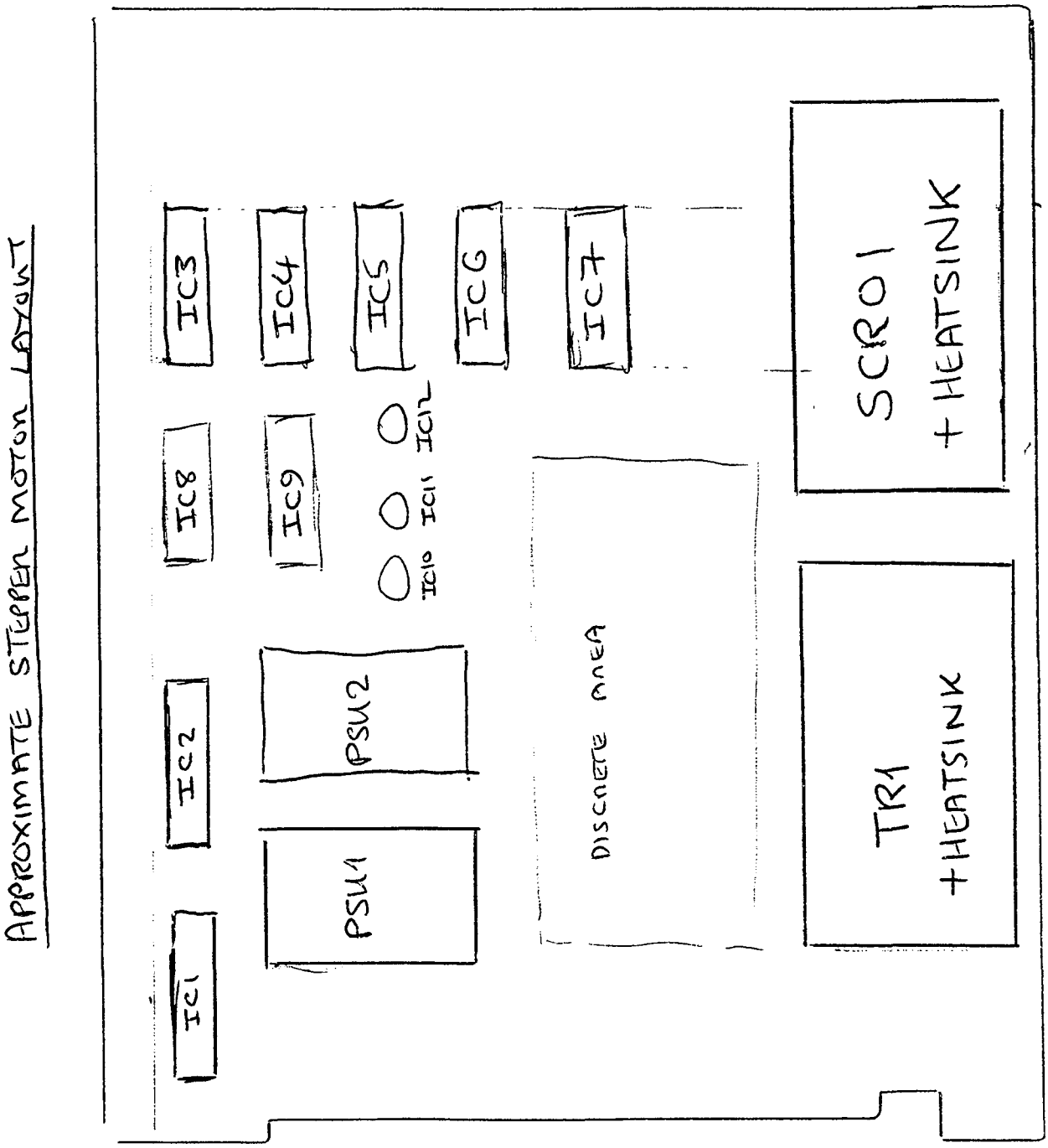

BOARD LAYOUT

AG

PARTS LIST

INTEGRATED CIRCUITS :-

IC1 *	L293E	PUSH PULL FOUR CHANNEL DRIVERS	RS 659-851
IC2 *	L293E	" " " " "	RS 659-851
IC3	74HCT191	UP/DOWN COUNTER	RS 652-131
IC4	74HCT74	FLIP/FLOP, D TYPE	RS 633-98
IC5	74HCT138	3 TO 8 DECODER	RS 301-43[illegible]
IC6	74HCT04	INVERTER, HEX	RS 301-369
IC7	74HCT02	NOR GATES	RS 633-903
IC8	74HCT11	3 I/P AND	RS 301-397
IC9	74HCT08	2 I/P AND	RS 301-375
IC10	AD581KH		RS 411-595
IC11	AD581KH		RS 411-595
IC12	AD581KH		RS 411-595

* HEATSINKS ATTACHED

2 OFF RS 402-513 CLIP ON HEATSINK

1 OFF HEATSINK BINDER RS 850-984

[IN CASE CLIP NOT BIG ENOUGH]

DC-DC CONVERTER :-

PSU Ø1	TED 2411	RS	114-5609
PSU Ø2	TED 2411	RS	114-5609

MOSFETS :-

TR1	IRFP9140		RS 189-0949
TR3	2N2907A	(PNP BIPOLAR)	STORES

* HEATSINK FOR ABOVE — RS 402-995

DUAL TRANSISTOR

TR2 2N3810A — FROM STOCKS

S R

SCR01 X0402DE SCR — FARNELL 706-024

* HEATSINK FOR ABOVE — RS 402-995

DIODES

A8

D1	15V ZENER DIODE	RS	283-744
D2	1mA CONSTANT CURRENT DIODE J505	RS	283-479
D3	1mA CONSTANT CURRENT DIODE J505	RS	283-479
D4	33V ZENER DIODE	RS	283-788
D5	47V ZENER DIODE	RS	283-801
D6	33V ZENER DIODE	RS	283-788
D7	MEDIUM POWER DIODE 1N4002	RS	261-152
D8	↓	↓	
D9			
D10			
D11			
D12			
D13	GP DIODE		1N4148

RESISTORS

A9

R1	0.1Ω, RESISTOR, 6WATT	RS199-6378
R2	100R, RESISTOR, 1/4WATT	RS 148-269
R3	100R, RESISTOR, 1/4 WATT	RS 148-269
R4	22K RESISTOR, 1/4 WATT	RS 148-815
R5	300R, RESISTOR, 1/4 WATT	RS 148-376
R6	22K RESISTOR, 1/4 WATT	RS 148-815
R7	4K7, RESISTOR, 6WATT	RS 199-6586
R8	1Ω, RESISTOR, 6 WATT	RS 199-6429
R9	1KΩ, RESISTOR, 1/4 WATT	RS 148-506
R10	10KΩ, RESISTOR, 1/4 WATT	RS 148-736
R11	10KΩ, RESISTOR, 1/4 WATT	RS 148-736
R12	10KΩ, RESISTOR, 1/4 WATT	RS 148-736
R13	220Ω, RESISTOR, 1/4 WATT	RS 148-348
R14	220Ω, RESISTOR, 1/4 WATT	RS 148-348
215	220Ω, RESISTOR, 1/4 WATT	RS 148-348
R16	1KΩ, RESISTOR, 1/8 WATT	STOCK
R17	10KΩ, RESISTOR, 1/8 WATT	STOCK

CAPACITORS

A1C

C1	10nF CERAMIC, 100V	RS	125-777
C2	10μF, ALUMINIUM, 100V	RS	493-93
C3	10nF CERAMIC, 100V	RS	125-777
C4	22μF, ALUMINIUM, 25V	RS	493-733
C5	1μF CERAMIC, 100V	RS	126-067
C6	1μF CERAMIC, 100V	RS	126-067
C7	1μF CERAMIC, 100V	RS	126-067
C8	1μF CERAMIC, 100V	RS	126-067
C9	1μF CERAMIC, 100V	RS	126-067
C10	1μF CERAMIC, 100V	RS	126-06
C11	10nF CERAMIC, 100V	RS	125-777
C12	10nF CERAMIC, 100V	RS	125-777
C13	10nF CERAMIC, 100V	RS	125-777
C14	22μV, ALUMINIUM, 25V	RS	493-733
C15	~~0.1μ~~ 1μF, CERAMIC, 100V	RS	126-067
C16	1μF, CERAMIC, 100V	RS	126-067
C17	1μF, CERAMIC, 100V	RS	126-067
C18	10μF, ALUMINIUM, 100V	RS	493.9

8. APPENDIX B

SCXI Wiring List

File · Scxihar.xls

Socket P212S . SSH Transducer and Tellback Interface

P212S	Function	Destn	Wire Groups	Wire Type	Comments
1	SSH Sun Sensor B Cable Shield	Shield	Grouped with 1,2,17,18,31,32	5TS26	
2	SSH Sun Sensor B Cathode 2	TB01/CH7+	Grouped with 1,2,17,18,31,32	5TS26	
17	SSH Sun Sensor B Cathode 1	TB01/CH6+	Grouped with 1,2,17,18,31,32	5TS26	
18	SSH Sun Sensor B Cathode 4	TB01/CH9+	Grouped with 1,2,17,18,31,32	5TS26	
31	SSH Sun Sensor B Anodes	TB01/CH18-	Grouped with 1,2,17,18,31,32	5TS26	
32	SSH Sun Sensor B Cathode 3	TB01/CH8+	Grouped with 1,2,17,18,31,32	5TS26	
11	SSH Latch Fully Disengaged uSw N.C	TB02/T4	Grouped with 11,27,41	3TS26	connect Shield to backshell
27	SSH Latch Fully Disengaged uSw Com	TB02/T15	Grouped with 11,27,41	3TS26	connect Shield to backshell
41	SSH Latch Fully Disengaged uSw N.O	TB02/CH2+	Grouped with 11,27,41	3TS26	connect Shield to backshell
12	SSH Door Fully Closed uSw N.C	TB02/T5	Grouped with 12,28,42	3TS26	connect Shield to backshell
28	SSH Door Fully Closed uSw Com	TB02/T15	Grouped with 12,28,42	3TS26	connect Shield to backshell
42	SSH Door Fully Closed uSw N.O	TB02/T6	Grouped with 12,28,42	3TS26	connect Shield to backshell
13	SSH Latch Fully Engaged uSw N.C.	TB02/T8	Grouped with 13,29,43	3TS26	connect Shield to backshell
29	SSH Latch Fully Engaged uSw Com	TB02/T16	Grouped with 13,29,43	3TS26	connect Shield to backshell
43	SSH Latch Fully Engaged uSw N.O.	TB02/T7	Grouped with 13,29,43	3TS26	connect Shield to backshell
14	SSH Door Fully Open uSw N.C.	TB02/T11	Grouped with 14,30,44	3TS26	connect Shield to backshell
30	SSH Door Fully Open uSw Com	TB02/T16	Grouped with 14,30,44	3TS26	connect Shield to backshell
44	SSH Door Fully Open uSw N.O.	TB02/T10	Grouped with 14,30,44	3TS26	connect Shield to backshell
21	SSH Motor Temperature B Drive	TB01/CH19+	Grouped with 21,22	2TS26	connect Shield to backshell
22	SSH Motor Temperature B Sense	TB01/CH13+	Grouped with 21,22	2TS26	connect Shield to backshell
3	SSH Sun Sensor A Cable Shield	Shield	Grouped with 3,4,19,20,33,34	5TS26	
4	SSH Sun Sensor A Cathode 2	TB01/CH3+	Grouped with 3,4,19,20,33,34	5TS26	
19	SSH Sun Sensor A Cathode 1	TB01/CH2+	Grouped with 3,4,19,20,33,34	5TS26	
20	SSH Sun Sensor A Cathode 4	TB01/CH5+	Grouped with 3,4,19,20,33,34	5TS26	
33	SSH Sun Sensor A Anodes	TB01/CH18-	Grouped with 3,4,19,20,33,34	5TS26	
34	SSH Sun Sensor A Cathode 3	TB01/CH4+	Grouped with 3,4,19,20,33,34	5TS26	
35	SSH Motor Temperature A Drive	TB01/CH19+	Grouped with 35,36	2TS26	connect Shield to backshell
36	SSH Motor Temperature A Sense	TB01/CH12+	Grouped with 35,36	2TS26	connect Shield to backshell
5	SSH HWA Temperature A Drive	TB01/CH19+	Grouped with 5,6	2TS26	connect Shield to backshell
6	SSH HWA Temperature A Sense	TB01/CH10+	Grouped with 5,6	2TS26	connect Shield to backshell
7	SSH HWA Temperature B Drive	TB01/CH19+	Grouped with 7,8	2TS26	connect Shield to backshell
8	SSH HWA Temperature B Sense	TB01/CH11+	Grouped with 7,8	2TS26	connect Shield to backshell

B2

File · Scxihar.xls

Socket P212S . SSH Transducer and Tellback Interface

P212S	Function	Destn	Wire Groups	Wire Type	Comments
9	SSH Door Position Sensor Cable Shield	Shield	Grouped with 9,24,25,39	3TS26	
24	SSH Door Position Sensor Drive	TB01/CH17+	Grouped with 9,24,25,39	3TS26	
25	SSH Door Position Sensor Return	TB01/CH16-	Grouped with 9,24,25,39	3TS26	
39	SSH Door Position Sensor Wiper	TB01/CH16+	Grouped with 9,24,25,39	3TS26	
10	Spare				
15	Spare				
16	Spare				
23	Spare				
26	Spare				
37	Spare				
38	Spare				
40	Spare				

B3

File · Scxihar.xls

Socket P211S SSH Actuator Interface

P211S	Function	Destn	Wire Groups	Wire Type	Comments
3	SSH HWA Shield	Shield	Common to HWA A,B	2TS22	
1	SSH HWA Heater A Drive	TB03/NC(6)	Grouped with 1, 11, 3	2TS22	
11	SSH HWA Heater A Return	TB03/COM(13)	Grouped with 1, 11, 3	2TS22	
2	SSH HWA Heater B Drive	TB03/NO(6)	Grouped with 2, 6, 3	2TS22	
6	SSH HWA Heater B Return	TB03/COM(13)	Grouped with 2, 6, 3	2TS22	
7	SSH Motor A Phase 1 Drive (Yel)	TB03/NC(9)	Grouped with 7,12,13,8	3TS24	
8	SSH Drive Motor A Shield	Shield	Grouped with 7,12,13,8	3TS24	
12	SSH Motor A Phase 2 Drive (Red)	TB03/NC(10)	Grouped with 7,12,13,8	3TS24	
13	SSH Motor A Phase 3 Drive (Wht)	TB03/NC(11)	Grouped with 7,12,13,8	3TS24	
9	SSH Motor B Phase 1 Drive (Yel)	TB03/N0(9)	Grouped with 9,10,14,15	3TS24	
10	SSH Motor B Shield	Shield	Grouped with 9,10,14,15	3TS24	
14	SSH Motor B Phase 2 Drive (Red)	TB03/NO(10)	Grouped with 9,10,14,15	3TS24	
15	SSH Motor B Phase 3 Drive (Wht)	TB03/NO(11)	Grouped with 9,10,14,15	3TS24	
4	Spare				
5	Spare				

BF

File Scxihar.xls

Socket P221S SVA Interface

P221S	Function	Destn	Wire Groups	Wire Type	Comments
1	SVA Motor Temp A Drive	TB01/CH19+	Grouped with 1,6	2TS26	shield unconnected, build problem
6	SVA Motor Temp A Sense	TB01/CH0+	Grouped with 1,6	2TS26	shield unconnected, build problem
2	SVA Door Fully Open uSw N.C.	TB02/T1	Grouped with 2,8,13	3TS26	shield unconnected, build problem
8	SVA Door Fully Open uSw N.O	TB02/CH1+	Grouped with 2,8,13	3TS26	shield unconnected, build problem
13	SVA Door Fully Open uSw Com	TB02/T14	Grouped with 2,8,13	3TS26	shield unconnected, build problem
11	SVA Motor Drive Shield	Shield	Grouped with 3,14 and 4,9		
3	SVA Motor Winding A Drive	TB03/NC(3)	Grouped with 3,14,11	2TS24	
14	SVA Motor Winding A Return	TB03/NC(4)	Grouped with 3,14,11	2TS24	
4	SVA Motor Winding B Drive	TB03/NO(3)	Grouped with 4,9,11	2TS24	
9	SVA Motor Winding B Return	TB03/NO(4)	Grouped with 4,9,11	2TS24	
5	SVA Door Fully Closed uSw N.O	TB02/T3	Grouped with 5,10,15	3TS26	shield unconnected, build problem
10	SVA Door Fully Closed uSw Com	TB02/T14	Grouped with 5,10,15	3TS26	shield unconnected, build problem
15	SVA Door Fully Closed uSw N.C.	TB02/T2	Grouped with 5,10,15	3TS26	shield unconnected, build problem
7	SVA Motor Temp B Drive	TB01/CH19+	Grouped with 7,12	2TS26	shield unconnected, build problem
12	SVA Motor Temp B Sense	TB01/CH1+	Grouped with 7,12	2TS26	shield unconnected, build problem

B5

File Scxihar.xls

+70V Power Supply

Item	70V PSU	Function	Destn	Wire Groups	Wire Type	Comments
1	+	PSU Positive	TB04/CH5+	Grouped with +/-	2T22	
2	-	PSU Negative	TB04/CH5-	Grouped with +/-	2T22	

B6

File : Scxihar.xls

Analogue Terminal Block :Based on SCXI1300 + Resistor Board + Additional Terminals

Item	Terminal Block 1	Function	Destn	Wire Groups	Wire Type	Comments
1	CH0 -	Internal 0V (AD490) Bus	Various	Daisy Chained to CH19-	24AWG	
2	CH0 +	SVA Motor Temp A Sense	P221S/6	Grouped with CH0+, CH19+, FL1	2TS26	
			R1-2	Single	24AWG	
3	CH1 -	Internal 0V (AD490) Bus	Various	Daisy Chained to CH19-	24AWG	
4	CH1 +	SVA Motor Temp B Sense	P221S/12	Grouped with CH1+, CH19+, FL1	2TS26	
			R2-2	Single	24AWG	
5	CH2 -	Internal 0V (Therm) Bus	Various	Daisy Chained to CH18-	24AWG	
6	CH2+	SSH Sun Sensor A Cathode 1	P212S/19	CH18-, FL1, CH2+, CH3+, CH4+, CH5+	5TS26	
			R7/R8	Single	24AWG	
7	CH3 -	Internal 0V (Therm) Bus	Various	Daisy Chained to CH18-	24AWG	
8	CH3 +	SSH Sun Sensor A Cathode 2	P212S/4	CH18-, FL1, CH2+, CH3+, CH4+, CH5+	5TS26	
			R9/R10	Single	24AWG	
9	CH4 -	Internal 0V (Therm) Bus	Various	Daisy Chained to CH18-	24AWG	
10	CH4 +	SSH Sun Sensor A Cathode 3	P212S/34	CH18-, FL1, CH2+, CH3+, CH4+, CH5+	5TS26	
			R11/R12	Single	24AWG	
11	CH5 -	Internal 0V (Therm) Bus	Various	Daisy Chained to CH18-	24AWG	
12	CH5+	SSH Sun Sensor A Cathode 4	P212S/20	CH18-, FL1, CH2+, CH3+, CH4+, CH5+	5TS26	
			R13/R14	Single	24AWG	
13	CH6 -	Internal 0V (Therm) Bus	Various	Daisy Chained to CH18-	24AWG	
14	CH6 +	SSH Sun Sensor B Cathode 1	P212S/17	CH18-, FL1, CH6+, CH7+, CH8+, CH9+	5TS26	
			R15/R16	Single	24AWG	
15	CH7 -	Internal 0V (Therm) Bus	Various	Daisy Chained to CH18-	24AWG	
16	CH7 +	SSH Sun Sensor B Cathode 2	P212S/2	CH18-, FL1, CH6+, CH7+, CH8+, CH9+	5TS26	
			R17/R18	Single	24AWG	
17	CH8 -	Internal 0V (Therm) Bus	Various	Daisy Chained to CH18-	24AWG	
18	CH8 +	SSH Sun Sensor B Cathode 3	P212S/32	CH18-, FL1, CH6+, CH7+, CH8+, CH9+	5TS26	
			R19/R20	Single	24AWG	
19	CH9 -	Internal 0V (Therm) Bus	Various	Daisy Chained to CH18-	24AWG	
20	CH9+	SSH Sun Sensor B Cathode 4	P212S/18	CH18-, FL1, CH6+, CH7+, CH8+, CH9+	5TS26	
			R21/R22	Single	24AWG	
21	CH10 -	Internal 0V (AD490) Bus	Various	Daisy Chained to CH19-	24AWG	

File Scxihar.xls

Analogue Terminal Block :Based on SCXI1300 + Resistor Board + Additional Terminals

Item	Terminal Block 1	Function	Destn	Wire Groups	Wire Type	Comments
22	CH10 +	SSH HWA Temperature A Sense	P212S/6	Grouped with CH10+, CH19+, FL1	2TS26	
			R3-2	Single	24AWG	
23	CH11 -	Internal 0V (AD490) Bus	Various	Daisy Chained to CH19-	24AWG	
24	CH11+	SSH HWA Temperature B Sense	P212S/8	Grouped with CH11+, CH19+, FL1	2TS26	
			R4-2	Single	24AWG	
25	CH12 -	Internal 0V (AD490) Bus	Various	Daisy Chained to CH19-	24AWG	
26	CH12 +	SSH Motor Temperature A Sense	P212S/36	Grouped with CH12+, CH19+, FL1	2TS26	
			R5-2	Single	24AWG	
27	CH13 -	Internal 0V (AD490) Bus	Various	Daisy Chained to CH19-	24AWG	
28	CH13 +	SSH Motor Temperature B Sense	P212S/22	Grouped with CH13+, CH19+, FL1	2TS26	
			R6-2	Single	24AWG	
29	CH14 -	SVA Motor A Monitor -ve	TB03/NC(2)	Grouped with CH14-, NC1	2T24	Changed from TB03/NC(4), 1/10/98
			R24	Single	24AWG	
30	CH14+	SVA Motor A Monitor	R23/R24	Single	24AWG	
31	CH15 -	SVA Motor B Monitor -ve	~~TB03/NC(4)~~	~~Grouped with CH15-, NC2~~	~~2T24~~	Deleted 1/10/98
32			R26	Single	24AWG	
33	CH15 +	SVA Motor B Monitor	R25/R26	Single	24AWG	
34	CH16 -	SSH Door Position Sensor Return	P212S/25	Grouped with CH16+/-, CH17+, FL1	3TS26	
			CH17-	Single	24AWG	
35	CH16 +	SSH Door Position Sensor Wiper	P212S/39	Grouped with CH16+/-, CH17+, FL1	3TS26	
36	CH17-	0V (Pot)	TB04/T4	CH17+/CH17-	2T24	
		SSH Door Position Sensor Return	CH16-	Single	24AWG	
37	CH17+	+10V (Pot)	TB04/T1	CH17+/CH17-	2T24	
		SSH Door Position Sensor Drive	P212S/24	Grouped with CH16+/-, CH17+, FL1	3TS26	
38	CH18-	0V (Therm)	TB04/T5	CH18+/CH18-	2T24	
		SSH Sun Sensor A Anodes	P212S/33	CH18-, FL1, CH2+, CH3+, CH4+, CH5+	5TS26	
		SSH Sun Sensor B Anodes	P212S/31	CH18-, FL1, CH6+, CH7+, CH8+, CH9+	5TS26	
		Internal 0V (Therm) Bus	Various	Daisy Chained to CH18-	24AWG	
39	CH18+	+10V (Therm)	TB04/T2	CH18+/CH18-	2T24	
		Internal +10V (Therm) Bus	Various	Daisy Chained to CH18+	24AWG	
40	CH19-	0V(AD490)	TB04/T6	CH19+/CH19-	2T24	

File . Scxihar.xls

Analogue Terminal Block :Based on SCXI1300 + Resistor Board + Additional Terminals

Item	Terminal Block 1	Function	Destn	Wire Groups	Wire Type	Comments
		Internal 0V (AD490) Bus	Various	Daisy Chained to CH19-	24AWG	
41	CH19+	+10V(AD490)	TB04/T3	CH19+/CH19-	2T24	
		SVA Motor Temp A Drive	P221S/1	Grouped with CH0+, CH19+, FL1	2TS26	
		SVA Motor Temp B Drive	P221S/7	Grouped with CH1+, CH19+, FL1	2TS26	
		SSH HWA Temperature A Drive	P212S/5	Grouped with CH10+, CH19+, FL1	2TS26	
		SSH HWA Temperature B Drive	P212S/7	Grouped with CH11+, CH19+, FL1	2TS26	
		SSH Motor Temperature A Drive	P212S/35	Grouped with CH12+, CH19+, FL1	2TS26	
		SSH Motor Temperature B Drive	P212S/21	Grouped with CH13+, CH19+, FL1	2TS26	
42	NC1	SVA Motor A Monitor +ve	TB03/NC(1)	Grouped with CH14-, NC1	2T24	Changed from TB03/NC(3), 1/10/98
			R23	Single	24AWG	
43	NC2	SVA Motor B Monitor +ve	~~TB03/NC(3)~~	~~Grouped with CH15-, NC2~~	~~2T24~~	Deleted 1/10/98
			R25	Single	24AWG	
44	R1-1	Internal 0V (AD490) Bus	Various	Daisy Chained to CH19-	24AWG	RESISTOR 12K1 RS 166-807
45	R1-2	SVA Motor Temp A Sense	CH0+			
46	R2-1	Internal 0V (AD490) Bus	Various	Daisy Chained to CH19-	24AWG	RESISTOR 12K1 RS 166-807
47	R2-2	SVA Motor Temp B Sense	CH1+			
48	R3-1	Internal 0V (AD490) Bus	Various	Daisy Chained to CH19-	24AWG	RESISTOR 12K1 RS 166-807
49	R3-2	SSH HWA Temperature A Sense	CH10+	Single	24AWG	
50	R4-1	Internal 0V (AD490) Bus	Various	Daisy Chained to CH19-	24AWG	RESISTOR 12K1 RS 166-807
51	R4-2	SSH HWA Temperature B Sense	CH11+	Single	24AWG	
52	R5-1	Internal 0V (AD490) Bus	Various	Daisy Chained to CH19-	24AWG	RESISTOR 12K1 RS 166-807
53	R5-2	SSH Motor Temperature A Sense	CH12+	Single	24AWG	
54	R6-1	Internal 0V (AD490) Bus	Various	Daisy Chained to CH19-	24AWG	RESISTOR 12K1 RS 166-807
55	R6-2	SSH Motor Temperature B Sense	CH13+	Single	24AWG	
56	R7	Internal +10V (Therm) Bus	Various	Daisy Chained to CH18+	24AWG	RESISTOR 8K45 RS 166-655
57	R7/R8	SSH Sun Sensor A Cathode 1	CH2+	Single	24AWG	
58	R8	Internal 0V (Therm) Bus	Various	Daisy Chained to CH18-	24AWG	RESISTOR 5K11 RS 166-447
59	R9	Internal +10V (Therm) Bus	Various	Daisy Chained to CH18+	24AWG	RESISTOR 8K45 RS 166-655
60	R9/R10	SSH Sun Sensor A Cathode 2	CH3+	Single	24AWG	
61	R10	Internal 0V (Therm) Bus	Various	Daisy Chained to CH18-	24AWG	RESISTOR 5K11 RS 166-447
62	R11	Internal +10V (Therm) Bus	Various	Daisy Chained to CH18+	24AWG	RESISTOR 8K45 RS 166-655

File . Scxihar.xls

Analogue Terminal Block :Based on SCXI1300 + Resistor Board + Additional Terminals

Item	Terminal Block 1	Function	Destn	Wire Groups	Wire Type	Comments
63	R11/R12	SSH Sun Sensor A Cathode 3	CH4+	Single	24AWG	
64	R12	Internal 0V (Therm) Bus	Various	Daisy Chained to CH18-	24AWG	RESISTOR 5K11 RS 166-447
65	R13	Internal +10V (Therm) Bus	Various	Daisy Chained to CH18+	24AWG	RESISTOR 8K45 RS 166-655
66	R13/R14	SSH Sun Sensor A Cathode 4	CH5+	Single	24AWG	
67	R14	Internal 0V (Therm) Bus	Various	Daisy Chained to CH18-	24AWG	RESISTOR 5K11 RS 166-447
68	R15	Internal +10V (Therm) Bus	Various	Daisy Chained to CH18+	24AWG	RESISTOR 8K45 RS 166-655
69	R15/R16	SSH Sun Sensor B Cathode 4	CH6+	Single	24AWG	
70	R16	Internal 0V (Therm) Bus	Various	Daisy Chained to CH18-	24AWG	RESISTOR 5K11 RS 166-447
71	R17	Internal +10V (Therm) Bus	Various	Daisy Chained to CH18+	24AWG	RESISTOR 8K45 RS 166-655
72	R17/R18	SSH Sun Sensor B Cathode 4	CH7+	Single	24AWG	
73	R18	Internal 0V (Therm) Bus	Various	Daisy Chained to CH18-	24AWG	RESISTOR 5K11 RS 166-447
74	R19	Internal +10V (Therm) Bus	Various	Daisy Chained to CH18+	24AWG	RESISTOR 8K45 RS 166-655
75	R19/R20	SSH Sun Sensor B Cathode 4	CH8+	Single	24AWG	
76	R20	Internal 0V (Therm) Bus	Various	Daisy Chained to CH18-	24AWG	RESISTOR 5K11 RS 166-447
77	R21	Internal +10V (Therm) Bus	Various	Daisy Chained to CH18+	24AWG	RESISTOR 8K45 RS 166-655
78	R21/R22	SSH Sun Sensor B Cathode 4	CH9+	Single	24AWG	
79	R22	Internal 0V (Therm) Bus	Various	Daisy Chained to CH18-	24AWG	RESISTOR 5K11 RS 166-447
80	R23	SVA Motor A Monitor +ve	NC1	Single	24AWG	RESISTOR 10K RS 144-368
81	R23/R24	SVA Motor A Monitor	CH14+	Single	24AWG	
82	R24	SVA Motor A Monitor -ve	CH14-	Single	24AWG	RESISTOR 1K RS 146-506
83	R25	SVA Motor B Monitor +ve	NC2	Single	24AWG	RESISTOR 10K RS 144-368
84	R25/R26	SVA Motor B Monitor	CH15+	Single	24AWG	
85	R26	SVA Motor B Monitor -ve	CH15-	Single	24AWG	RESISTOR 1K RS 146-506
86	FL1	Structure	Chassis	Single	24AWG	Flying lead, connect to chassis of assembly
		SSH Sun Sensor A Cable Shield	Shield	CH18-, FL1, CH2+, CH3+, CH4+, CH5+	5TS26	Use 24 or 26AWG, daisy chained
		SSH Sun Sensor B Cable Shield	Shield	CH18-, FL1, CH6+, CH7+, CH8+, CH9+	5TS26	Use 24 or 26AWG, daisy chained
		SVA Motor Temp A Shield	Shield	Grouped with CH0+, CH19+, FL1	2TS26	Use 24 or 26AWG, daisy chained
		SVA Motor Temp B Shield	Shield	Grouped with CH1+, CH19+, FL1	2TS26	Use 24 or 26AWG, daisy chained
		SSH HWA Temperature A Shield	Shield	Grouped with CH10+, CH19+, FL1	2TS26	Use 24 or 26AWG, daisy chained
		SSH HWA Temperature B Shield	Shield	Grouped with CH11+, CH19+, FL1	2TS26	Use 24 or 26AWG, daisy chained
		SSH Motor Temperature A Shield	Shield	Grouped with CH12+, CH19+, FL1	2TS26	Use 24 or 26AWG, daisy chained

B10

File · Scxihar.xls

Analogue Terminal Block :Based on SCXI1300 + Resistor Board + Additional Terminals

Item	Terminal Block 1	Function	Destn	Wire Groups	Wire Type	Comments
		SSH Motor Temperature B Shield	Shield	Grouped with CH13+, CH19+, FL1	2TS26	Use 24 or 26AWG, daisy chained
		SSH Door Pos Sensor Cable Shield	Shield	Grouped with CH16+/-, CH17+, FL1	3TS26	Use 24 or 26AWG, daisy chained

B11

File Scxihar.xls

Digital Terminal Block :Based on SCXI1301 + Additional Terminals

Item	Terminal Block 2	Function	Destn	Wire Groups	Wire Type	Comments
1	CH1 + (A30)	SVA Door Fully Open uSw N.O	P221S/8	Grouped with T1, T14, CH1+,	3TS26	
			R2-2	Single	24AWG	
2	CH1 - (C30)	Internal +5V (DIG) Bus	Various	Daisy Chained to T13	24AWG	
3	CH2 + (A26)	SSH Latch Fully Disen uSw N.O.	P212S/41	Grouped with T4,T12,T14, CH2+	3TS26	
			R6-2	Single	24AWG	
4	CH2 - (C26)	Internal +5V (DIG) Bus	Various	Daisy Chained to T13	24AWG	
5	R1-1	Internal +5V (DIG) Bus	Various	Daisy Chained to T13	24AWG	RESISTOR 10K RS 144-368
6	R1-2		T1	Single	24AWG	
7	R2-1	Internal +5V (DIG) Bus	Various	Daisy Chained to T13	24AWG	RESISTOR 10K RS 144-368
8	R2-2		CH1+	Single	24AWG	
9	R3-1	Internal +5V (DIG) Bus	Various	Daisy Chained to T13	24AWG	RESISTOR 10K RS 144-368
10	R3-2		T2	Single	24AWG	
11	R4-1	Internal +5V (DIG) Bus	Various	Daisy Chained to T13	24AWG	RESISTOR 10K RS 144-368
12	R4-2		T3	Single	24AWG	
13	R5-1	Internal +5V (DIG) Bus	Various	Daisy Chained to T13	24AWG	RESISTOR 10K RS 144-368
14	R5-2		T4	Single	24AWG	
15	R6-1	Internal +5V (DIG) Bus	Various	Daisy Chained to T13	24AWG	RESISTOR 10K RS 144-368
16	R6-2		CH2+	Single	24AWG	
17	R7-1	Internal +5V (DIG) Bus	Various	Daisy Chained to T13	24AWG	RESISTOR 10K RS 144-368
18	R7-2		T5	Single	24AWG	
19	R8-1	Internal +5V (DIG) Bus	Various	Daisy Chained to T13	24AWG	RESISTOR 10K RS 144-368
20	R8-2		T6	Single	24AWG	
21	R9-1	Internal +5V (DIG) Bus	Various	Daisy Chained to T13	24AWG	RESISTOR 10K RS 144-368
22	R9-2		T8	Single	24AWG	
23	R10-1	Internal +5V (DIG) Bus	Various	Daisy Chained to T13	24AWG	RESISTOR 10K RS 144-368
24	R10-2		T7	Single	24AWG	
25	R11-1	Internal +5V (DIG) Bus	Various	Daisy Chained to T13	24AWG	RESISTOR 10K RS 144-368
26	R11-2		T11	Single	24AWG	
27	R12-1	Internal +5V (DIG) Bus	Various	Daisy Chained to T13	24AWG	RESISTOR 10K RS 144-368
28	R12-2		T10	Single	24AWG	
29	T1 (B30)	SVA Door Fully Open uSw N.C.	P221S/2	Grouped with T1,T12,T14,CH1+,	3TS26	Connect to PL1 connector pin in brackets

B12

File Scxihar.xls

Digital Terminal Block :Based on SCXI1301 + Additional Terminals

Item	Terminal Block 2	Function	Destn	Wire Groups	Wire Type	Comments
			R1-2	Single	24AWG	
30	T2 (B29)	SVA Door Fully Closed uSw N.C	P221S/15	Grouped with T2,T3,T12,T14	3TS26	Connect to PL1 connector pin in brackets
			R3-2	Single	24AWG	
31	T3 (A29)	SVA Door Fully Closed uSw N.O	P221S/5	Grouped with T2,T3,T12,T14	3TS26	Connect to PL1 connector pin in brackets
			R4-2	Single	24AWG	
32	T4 (B26)	SSH Latch Fully Disen uSw N.C.	P212S/11	Grouped with T4,T12,T14, CH2+	3TS26	Connect to PL1 connector pin in brackets
			R5-2	Single	24AWG	
33	T5 (B25)	SSH Door Fully Closed uSw N.C.	P212S/12	Grouped with T5,T6,T12,T14	3TS26	Connect to PL1 connector pin in brackets
			R7-2	Single	24AWG	
34	T6 (A25)	SSH Door Fully Closed uSw N.O	P212S/42	Grouped with T5,T6,T12,T14	3TS26	Connect to PL1 connector pin in brackets
			R8-2	Single	24AWG	
35	T7 (A22)	SSH Latch Fully Engaged uSw N.O	P212S/43	Grouped with T7,T8,T12,T14	3TS26	Connect to PL1 connector pin in brackets
			R10-2	Single	24AWG	
36	T8 (B22)	SSH Latch Fully Engaged uSw N.C.	P212S/13	Grouped with T7,T8,T12,T14	3TS26	Connect to PL1 connector pin in brackets
			R9-2	Single	24AWG	
37	T9 (C22)	Internal +5V (DIG) Bus	Various	Daisy Chained to T13	24AWG	Connect to PL1 connector pin in brackets
38	T10 (A21)	SSH Door Fully Open uSw N.O.	P212S/44	Grouped with T10,T11,T12,T14	3TS26	Connect to PL1 connector pin in brackets
			R12-2	Single	24AWG	
39	T11 (B21)	SSH Door Fully Open uSw N.C.	P212S/14	Grouped with T10,T11,T12,T14	3TS26	Connect to PL1 connector pin in brackets
			R11-2	Single	24AWG	
40	T12	Structure	Chassis	Single	24AWG	Connect to chassis of assembly
		SVA Door Fully Open Shield	Shield	Grouped with T1,T12,T14,CH1+	3TS26	
		SVA Door Fully Closed Shield	Shield	Grouped with T2,T3,T12,T14	3TS26	
		SSH Latch Fully Disen Shield	Shield	Grouped with T4,T12,T14, CH2+	3TS26	
		SSH Door Fully Closed Shield	Shield	Grouped with T5,T6,T12,T14	3TS26	
		SSH Latch Fully Engaged Shield	Shield	Grouped with T7,T8,T12,T14	3TS26	
		SSH Door Fully Open Shield	Shield	Grouped with T10,T11,T12,T14	3TS26	
41	T13	+5V (DIG)	TB04/Hold	Grouped with T13/T14	2T24	
		Internal +5V (DIG) Bus	Various	Daisy Chained to T13	24AWG	
42	T14	0V (DIG)	TB04/Gnd	Grouped with T13/T14	2T24	
		SVA Door Fully Open uSw Com	P221S/13	Grouped with T1,T12,T14,CH1+	3TS26	

B13

File . Scxihar.xls
Digital Terminal Block :Based on SCXI1301 + Additional Terminals

Item	Terminal Block 2	Function	Destn	Wire Groups	Wire Type	Comments
		SVA Door Fully Closed uSw Com	P221S/10	Grouped with T2,T3,T12,T14	3TS26	
		SSH Latch Fully Disen uSw Com	P212S/27	Grouped with T4,T12,T14, CH2+	3TS26	
		SSH Door Fully Closed uSw Com	P212S/28	Grouped with T5,T6,T12,T14	3TS26	
		SSH Latch Fully Engaged uSw Com	P212S/29	Grouped with T7,T8,T12,T14	3TS26	
		SSH Door Fully Open uSw Com	P212S/30	Grouped with T10,T11,T12,T14	3TS26	

B14

File Scxihar.xls

Relay Switching . Based on SCXI1324 + Additional Terminals

Item	Terminal Block 3	Function	Destn	Wire Groups	Wire Type	Comments
1	COM(0) (B32)	PSU +ve (CL)	TB04/CH2+	Grouped with COM(0), NO(1)	2T22	
2	NO(0) (A31)	SVA Over Voltage	TB04/CH7+	Single	22AWG	
		SVA Supply	NC(1)	Single	22AWG	
		SVA Supply	NO(2)	Single	22AWG	
3	NC(0) (C31)	Not Used				
4	COM(1) (B30)	SVA Supply Switched.1	COM(3)	Single	22AWG	
5	NO(1) (A29)	PSU -ve (CL)	TB04/CH2-	Grouped with COM(0), NO(1)	2T22	
			NC(2)	Single	22AWG	
6	NC(1) (C29)	SVA Supply	NO(0)	Single	22AWG	
			TB01/NC01	Grouped with NC(1), NC(2)	2T24	Added 1/10/98
7	COM(2) (B28)	SVA Supply Switched.2	COM(4)	Single	22AWG	
8	NO(2) (A27)	SVA Supply	NO(0)	Single	22AWG	
9	NC(2) (C27)	PSU -ve (CL)	NO(1)	Single	22AWG	
			TB01/CH14-	Grouped with NC(1), NC(2)	2T24	Added 1/10/98
10	COM(3) (B26)	SVA Supply Switched.1	COM(1)	Single	22AWG	
11	NO(3) (A25)	~~SVA Motor B Monitor +ve~~	~~TB01/NC2~~	~~Grouped with NO(3), NO(4)~~	~~2T24~~	Deleted 1/10/98
		SVA Motor Winding B Drive	P221S/4	Grouped with NO(3), NO(4), FL1	2TS24	
12	NC(3) (C25)	~~SVA Motor A Monitor +ve~~	~~TB01/NC1~~	~~Grouped with NC(3), NC(4)~~	~~2T24~~	Deleted 1/10/98
		SVA Motor Winding A Drive	P221S/3	Grouped with NC(3), NC(4), FL1	2TS24	
13	COM(4) (B24)	SVA Supply Switched.2	COM(2)	Single	22AWG	
14	NO(4) (A23)	~~SVA Motor B Monitor -ve~~	~~TB01/CH15-~~	~~Grouped with NO(3), NO(4)~~	~~2T24~~	Deleted 1/10/98
		SVA Motor Winding B Return	P221S/9	Grouped with NO(3), NO(4), FL1	2TS24	
15	NC(4) (C23)	~~SVA Motor A Monitor -ve~~	~~TB01/CH14-~~	~~Grouped with NC(3), NC(4)~~	~~2T24~~	Deleted 1/10/98
		SVA Motor Winding A Return	P221S/14	Grouped with NC(3), NC(4), FL1	2TS24	
16	COM(5) (B22)	PSU +ve (CL)	TB04/CH3+	Grouped with COM(5), COM(13)	2T22	
17	NO(5) (A21)	HWA Over Voltage	TB04/CH6+	Single	22AWG	
		HWA Supply	COM(6)	Single	22AWG	
18	NC(5) (C21)	Not Used				
19	COM(6) (B20)	HWA Supply	NO(5)	Single	22AWG	
20	NO(6) (A19)	SSH HWA Heater B Drive	P211S/2	Grouped with COM(13), FL1, NO(6)	2TS22	
21	NC(6) (C19)	SSH HWA Heater A Drive	P211S/1	Grouped with COM(13), FL1, NC(6)	2TS22	

B15

File . Scxihar.xls

Relay Switching Based on SCXI1324 + Additional Terminals

Item	Terminal Block 3	Function	Destn	Wire Groups	Wire Type	Comments
22	COM(7) (B18)	PSU +ve (CL)	TB04/CH4+	Single	22AWG	
23	NO(7) (A17)	+28V SHA	TB04/CH6-	Single	22AWG	
24	NC(7) (C17)	Not Used				
25	COM(8) (B16)	Not Used				
26	NO(8) (A15)	Not Used				
27	NC(8) (C15)	Not Used				
28	COM(9) (B14)	SSH Motor Phase A Drive	TB04/CH0+	Grouped with COM(9) (10) (11)	3T22	
29	NO(9) (A13)	SSH Motor B Phase 1 Drive (Yel)	P211S/9	Grouped with FL1, NO(9) (10) (11)	3TS24	
30	NC(9) (C13)	SSH Motor A Phase 1 Drive (Yel)	P211S/7	Grouped with FL1, NC(9) (10) (11)	3TS24	
31	COM(10) (B12)	SSH Motor Phase B Drive	TB04/CH1+	Grouped with COM(9) (10) (11)	3T22	
32	NO(10) (A11)	SSH Motor B Phase 2 Drive (Red)	P211S/14	Grouped with FL1, NO(9) (10) (11)	3TS24	
33	NC(10) (C11)	SSH Motor A Phase 2 Drive (Red)	P211S/12	Grouped with FL1, NC(9) (10) (11)	3TS24	
34	COM(11) (B10)	SSH Motor Phase C Drive	TB04/CH0-	Grouped with COM(9) (10) (11)	3T22	
35	NO(11) (A9)	SSH Motor B Phase 3 Drive (Wht)	P211S/15	Grouped with FL1, NO(9) (10) (11)	3TS24	
36	NC(11) (C9)	SSH Motor A Phase 3 Drive (Wht)	P211S/13	Grouped with FL1, NC(9) (10) (11)	3TS24	
37	COM(12) (B8)	Not Used				
38	NO(12) (A7)	Not Used				
39	NC(12) (C7)	Not Used				
40	COM(13) (B6)	PSU -ve (CL)	TB04/CH3-	Grouped with COM(5), COM(13)	2T22	
		SSH HWA Heater A Return	P211S/11	Grouped with COM(13), FL1, NC(6)	2TS22	
		SSH HWA Heater B Return	P211S/6	Grouped with COM(13), FL1, NO(6)	2TS22	
41	NO(13) (A5)	Not Used				
42	NC(13) (C5)	Not Used				
43	COM(14) (B4)	Not Used				
44	NO(14) (A3)	Not Used				
45	NC(14) (C3)	Not Used				
46	COM(15) (B2)	Not Used				
47	NO(15) (A1)	Not Used				
48	NC(15) (C1)	Not Used				
49	FL1	Structure	Chassis	Single	24AWG	Connect to chassis of assembly
		SVA Motor Winding A Shield	Shield	Grouped with NC(3), NC(4), FL1	2TS24	

B16

File Scxihar.xls

Relay Switching · Based on SCXI1324 + Additional Terminals

Item	Terminal Block 3	Function	Destn	Wire Groups	Wire Type	Comments
		SVA Motor Winding B Shield	Shield	Grouped with NO(3), NO(4), FL1	2TS24	
		SSH HWA Heater A Shield	Shield	Grouped with COM(13), FL1, NC(6)	2TS22	
		SSH HWA Heater B Shield	Shield	Grouped with COM(13), FL1, NO(6)	2TS22	
		SSH Motor A Shield	Shield	Grouped with FL1, NC(9) (10) (11)	3TS24	
		SSH Motor B Shield	Shield	Grouped with FL1, NO(9) (10) (11)	3TS24	

B17

File Scxihar.xls

Stepper Motor Terminal Block :Based on SCXI1301 + Additional Terminals

Item	Terminal Block 4	Function	Destn	Wire Groups	Wire Type	Comments
1	CH0 + (A32)	SSH Motor Phase A Drive	TB03/B14	Grouped with CH0+,CH0-,CH1+	3T22	COM(9)
2	CH0 - (C32)	SSH Motor Phase C Drive	TB03/B10	Grouped with CH0+,CH0-,CH1+	3T22	COM(11)
3	CH1 + (A30)	SSH Motor Phase B Drive	TB03/B12	Grouped with CH0+,CH0-,CH1+	3T22	COM(10)
4	CH1 - (C30)	Spare				
5	CH2 + (A26)	PSU +ve (CL)	TB03/B32	Grouped with CH2+,CH2-	2T22	COM(0)
6	CH2 - (C26)	PSU -ve (CL)	TB03/A29	Grouped with CH2+,CH2-	2T22	NO(1)
7	CH3 + (A24)	PSU +ve (CL)	TB03/B22	Grouped with CH3+,CH3-	2T22	COM(5)
8	CH3 - (C24)	PSU -ve (CL)	TB03/COM(13)	Grouped with CH3+,CH3-	2T22	
9	CH4 + (A20)	PSU +ve (CL)	TB03/B18	Single	22AWG	COM(7)
10	CH4 - (C20)	PSU -ve (CL)				
11	CH5 + (A18)	PSU +ve	PSU01/+	Grouped with CH5+, CH5-	2T22	Reverse protection diodes added, IN4001 * 3
12	CH5 -(C18)	PSU -ve	PSU01/-	Grouped with CH5+, CH5-	2T22	Reverse protection diodes added, IN4001 * 3
13	CH6 + (A14)	HWA Over Voltage	TB03/A21	Single	22AWG	NO(5)
14	CH6 - (C14)	+28V SHA	TB03/A17	Single	22AWG	NO(7)
			CH7-	Single	22AWG	
15	CH7 + (A12)	SVA Over Voltage	TB03/A31	Single	22AWG	NO(0)
16	CH7 - (C12)	SHA Over Voltage	CH6-	Single	22AWG	
17	Hold (A6)	+5V (DIG)	TB02/T13	Grouped with Hold/Gnd	2T24	
18	Gnd (C6)	0V (DIG)	TB02/T14	Grouped with Hold/Gnd	2T24	
19	T1 (A5)	+10V (Pot)	TB01/CH17+	Grouped with T1/T4	2T24	Connect to PL1 connector pin in brackets
20	T2 (A4)	+10V (Therm)	TB01/CH18+	Grouped with T2/T5	2T24	Connect to PL1 connector pin in brackets
21	T3 (A3)	+10V(AD490)	TB01/CH19+	Grouped with T3/T6	2T24	Connect to PL1 connector pin in brackets
22	T4 (C5)	0V (Pot)	TB01/CH17-	Grouped with T1/T4	2T24	Connect to PL1 connector pin in brackets
23	T5 (C4)	0V (Therm)	TB01/CH18-	Grouped with T2/T5	2T24	Connect to PL1 connector pin in brackets
24	T6 (C3)	0V(AD490)	TB01/CH19-	Grouped with T3/T6	2T24	Connect to PL1 connector pin in brackets

B18

SECTION 5

Safety, Handling, Packing, Transportation Precautions and Procedures

SAFETY, HANDLING, PACKING, TRANSPORTATION PRECAUTIONS AND PROCEDURES

Electrical Safety Procedures applicable for functional testing of the Sunshield / HDA Assembly are defined in the SSH and SVA Test Equipment Manual, TC-MMS-400 which is included as part of this End Item Data Pack. There are no additional electrical safety requirements.

The Assembly is delivered installed on the STH Structure Assembly and grounding provisions have been made for transportation to ensure that the Sunshield / HDA Assembly has an electrical connection to the Transit Container. Note that this grounding hardware is for transportation purposes only; the Instrument Integrator is responsible for the flight standard grounding provisions.

The Flight Model handling, packing and transportation procedures are defined in the following RAL document :-

TC-RAL-168 **Preliminary Issue**	**HIRDLS Flight Transport Container Operating Instructions**