SP-HIR-228 DRAFT

HIRDLS

HIGHRESOLUTIONDYNAMICSLIMBSOUNDER

Originator: Philip I. Arter

Date: 25 August 1997

Subject / Title: SSH to CSS Interface Control Document (ICD)

Contents / Description / Summary:

Keywords:

Purpose (20 characters maximum):

Oxford University
Atmospheric, Oceanic & Planetary Physics
Parks Road
OXFORD OX1 3PU
United Kingdom

University of Colorado at Boulder
Center for Limb Atmospheric Sounding
3300 Mitchell Lane, Suite 250
Boulder, Colorado 80301-2296
United States of America

EOS

SP-HIR-228

SSH to CSS Interface Control Document (ICD)

Approved by: _____

Joanne Loh, US Program Manager Date

_____

Michael A. Dials, Technical Manager Date

_____

John G. Whitney, System Engineer Date

_____

W. R. Howard, Configuration Manager Date

Concurrence: _____

Nigel Morris, UK Program Manager Date

_____

SSH REE, Matra Marconi Space Date

_____

CSS REE, Lockheed Martin Missles & Space Date

NASA/GSFC Approval

Approved by: N/A _____

Laura Milam, Instrument Manager Date

Log of Changes

Rev.	Date	Section	Change Description
	97-08-25		Initial Draft

1.0 Scope

This Interface Control Document (ICD) defines the specific design implementation of the Mechanical, Electrical, and Thermal Conductive interfaces between the Sunshield Subsystem (SSH) and the Cooler Subsystem (CSS). The interfaces between these two subsystems are limited to Mechanical, and Thermal (conductive) between the Space View Aperture Assembly (SVA) and Cooler Radiator Panel.

2.0 Applicable Documents

The documents listed below are a part of this ICD to the extent specified herein. In the case of a conflict between the contents of this document and any Applicable or Referenced document, this document shall take precedence.

SP-HIR-013	Instrument Technical Specification (ITS)	Current Revision
SP-HIR-200	Internal Interface Control Document (IICD)	Current Revision

3.0 Interface Requirements

3.1 Mechanical

3.1.1 Drawings

SVA mechanical interface drawing = SP-HIR-228-DW1
SVA envelope/interface w/ CSS drawing = TBD
Cooler Radiator Panel mechanical drawing = TBD
SVA mounting holes = TBD shown on drawing DW1
Cooler Radiator Panel mounting holes = TBD inserts
Attachment hardware = TBD ea M4 Titanium (IMI 318) bolts
Bolt torque = TBD Nm
Tooling = TBD

3.1.2 Alignment

SVA alignment method = TBD
SVA datum = (0,0,0) center of base
SVA axes A1, A2, A3 shown in drawing
SVA position wrt TRCF = TBD
SVA position tolerance = TBD
SVA orientation/angular alignment wrt IRCF = TBD
Angular alignment tolerance = TBD

3.1.3 Mass Properties

SVA mass = TBD kg
SVA center of mass = TBD
SVA moments of inertia = TBD
SVA venting = none

3.2 Electrical

3.2.1 Drawings

3.2.2 Grounding

Grounding strap = 6 x 0.5 mm (TBV) provided by Instrument Integrator
Grounding strap mounting surface = free of paint
Grounding strap attachment = M4 x 8.4 bonding stud w/ nut & washer at location shown on drawing DW1

3.3 Thermal

SVA temperature = 30C or less (TBV)
Conductive heat transfer surfaces = TBD ea mounting feet shown on drawing DW1
SVA housing material = Aluminum
Contact area = TBD
SVA power dissipation = TBD W for reference
Conducted through feet = TBD W
Conducted through wiring harness = TBD W

HIRDLS

HIGH RESOLUTION DYNAMICS LIMB SOUNDER

Originator: Philip I. Arter Date: 17 October 1997

Subject / Title: **TSS to PSS Interface Control Document (ICD)**

Contents / Description / Summary:

Keywords: TSS, PSS, Interface
Purpose (20 characters maximum): Interface definition

Oxford University
Atmospheric, Oceanic & Planetary Physics
Parks Road
OXFORD OX1 3PU
United Kingdom

University of Colorado at Boulder
Center for Limb Atmospheric Sounding
3300 Mitchell Lane, Suite 250
Boulder, Colorado 80301-2296
United States of America

EOS

[Intentionally Blank]

TSS to PSS Interface Control Document (ICD)

Approved by: _____

Joanne Loh, US Program Manager Date

_____

Nigel Morris, UK Program Manager Date

_____

Michael A. Dials, Technical Manager Date

_____

John G. Whitney, System Engineer Date

_____

W. R. Howard, Configuration Manager Date

_____

Art Kraemer, TSS Program Manager Date

Concurrence: _____

TSS REE, Lockheed Martin Missles and Space Date

_____

PSS REE, Rutherford Appleton Laboratory Date

NASA/GSFC Approval

Approved by: N/A

Laura Milam, Instrument Manager Date

[Intentionally Blank]

Change Log

Rev.	Date	Section	Change Description
draft	97-08-28		Initial draft
draft	97-10-07		Incorporated TC-LOC-227 inputs dated 97-09-12
draft	97-10-08	3.2.2.3	Deleted "Each voltage line to the TEU shall be fully redundant." Changed "+5 Vdc - Ripple & Noise: <0.40 mVpp" to "40 mV" Changed "+15 Vdc - Ripple & Noise: <0.25 mVpp" to "25 mV" Changed "-15 Vdc - Ripple & Noise: <0.25 mVpp" to "25 mV"
draft	97-10-16	3.1	Changed heading to "Interface Configuration" Added "The top-level block diagram of this…" Inserted figure from 3.2.2 Changed figure to show "TEU A" and "TEU B" Deleted "(QBA)" and "(QBB)" from figure
		3.2.1.1	Changed text per JGW_comments.doc dated 97-10-16
		3.2.2	Changed heading to "Power Interface" Moved figure to 3.1
		3.2.2.1	Changed "…controlled by the IPU." To "…switched in the PCU by Ground Command via the IPU."
		3.2.2.3	Replaced entire section with JGW input dated 97-10-16 Deleted Power Consumption Tables 3.2.2.3-1, 3.2.2.3-2, 3.2.2.3-3, 3.2.2.3-4
		3.2.3	Changed to "Refer to TC-UCB-009…"
		3.3	Changed to "Refer to TC-UCB-009…"

[Intentionally Blank]

TABLE OF CONTENTS

1.0 SCOPE 8

2.0 DOCUMENT REFERENCES 8

2.1 Applicable Documents 8

2.2 Information Documents 8

3.0 INTERFACE REQUIREMENTS 9

3.1 Interface Concept Overview 9

3.2 Electrical Interface 10
3.2.1 Grounding and Shielding 10
3.2.2 Power Interface 10
3.2.3 Control and Data 12
3.2.4 Analog Monitors 13
3.2.5 Physical Electrical Interface 13

3.3 FUNCTIONAL INTERFACE 16

3.4 MECHANICAL INTERFACE 16

3.5 THERMAL INTERFACE 16

3.6 OPTICAL INTERFACE 16

3.7 ELECTRICAL BONDING 16

3.8 OTHER INTERFACES 16

1.0 Scope

This Interface Control Document (ICD) defines the specific design implementation of the Mechanical, Electrical, and Thermal Conductive interfaces between the Telescope Subsystem (TSS) and the Power Subsystem (PSS). The interfaces between these two subsystems are limited to Electrical between the Power Converter Unit (PCU) and Telescope Electronics Unit (TEU), and between the PCU and Encoder Electronics Assembly (EEA).

2.0 Document References

2.1 Applicable Documents

The documents listed below are a part of this ICD to the extent specified herein. In the case of a conflict between the contents of this document and any Applicable or Referenced document, this document shall take precedence.

SP-HIR-013	Instrument Technical Specification (ITS)	Current Revision
SP-HIR-200	Internal Interface Control Document (IICD)	Current Revision

2.2 Information Documents

TC-HIR-169	HIRDLS Power Distribution, Switching and Grounding	Current Revision
SP-HIR-036	Power Supply Subsystem Specification Document	Current Revision
SP-HIR-040	Telescope Subsystem Specification Document	Current Revision

3.0 Interface Requirements

3.1 Interface Concept Overview

The only interfaces between the PSS and the TSS are in the areas of electrical power and grounding. There are no control, data, mechanical, thermal, or optical interfaces between the PSS and TSS. The PCU will provide power directly to the Telescope Electronics Unit (TEU) and Encoder Electronics Assembly (EEA), and will provide power indirectly, through the TEU, to the Chopper Mechanical Unit, Scan Mirror drive motors, Accelerometers, and Wobble Sensor Electronics Assembly (WSEA). The top-level block diagram of this configuration is shown in Figure 3.1-1.

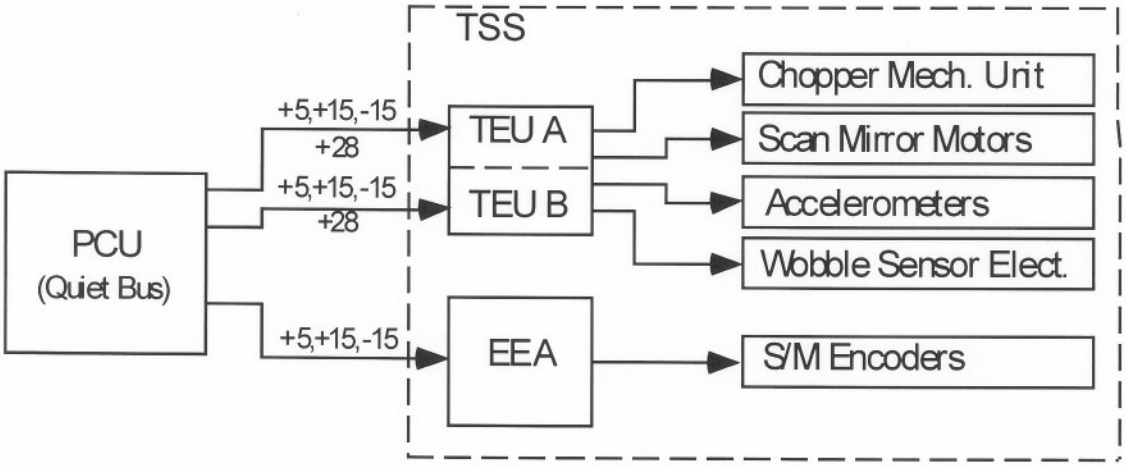

Figure 3.1-1
PCU to TSS Power Configuration

3.2 Electrical Interface

3.2.1 Grounding and Shielding

3.2.1.1 Primary Power Return

Within HIRDLS, primary power return wiring shall be isolated from all other returns and from chassis ground by 10.0 megohms DC or greater.

3.2.1.2 Secondary Power and Signal Return

Secondary power and signal returns shall be isolated from the primary power return by 10.0 megohms or greater. These returns shall each have a single-point ground point tied to structure ground at the HIRDLS single-point ground reference point.

3.2.1.3 Equipment Enclosure Grounds

N/A

3.2.1.4 Wire/Cable Shields Grounds

Cables shall have an overall shield connected to chassis ground through the connector shell. Individual shields shall be connected to chassis ground through a connector pin.

3.2.2 Power Interface

3.2.2.1 Primary Power

The TEU shall derive power from the +28V Quiet Buses A and B which will be switched in the PCU by Ground Command via the IPU. The configuration is shown in Figure 3.1-1.

3.2.2.2 Secondary Power

3.2.2.3 PCU to TSS Power Interface Characteristics

The PCU shall supply electrical power to the TSS as follows; these power interfaces shall conform to the requirements defined in the following paragraphs:

a) The PCU will supply redundant switched power to the TEU. Power will be switchedby Ground Command via the IPU. Both unregulated and regulated power will be supplied;

b) The PCU will supply non-redundant switched power to the EEA. Power switching within the EEA will be by Ground Command via the IPU.

The PCU-to-TSS outputs of +5 Vdc ,+15 Vdc and -15 Vdc come from redundant converters which are controlled by Ground Command via the IPU. The TEU, EEA and GEU share the same converters. Unregulated, switched +28 Vdc from the primary, spacecraft Quiet Bus shall also be provided to the TEU; this PCU output shall not exceed +36 volts steady state at the input of the TEU.

Table 3.2.2.3 shows the characteristics of the PCU outputs to the TSS.

	+5V	+15V	-15V	+28V (reg)	See Note
Voltage limits at PCU end of cable	+5.00 +5.10	+15.00 +15.30	-15.00 -15.30	+28.00 +28.50	1
TEU Nominal DC load current (mA)	1600	333	333	357	2
TEU Maximum DC load current (mA)	1600	333	333	357	2
EEA Nominal DC load current (mA)	1000	267	100	N/A	2
EEA Maximum DC load current (mA)	1000	267	100	N/A	2
Maximum resistance of cable + connector pins	300 milliohm	300 milliohm	300 milliohm	300 milliohm	
Maximum PCU supply output resistance	100 milliohm (DC to 5KHz)	100 milliohm (DC to 5KHz)	100 milliohm (DC to 5KHz)	100 milliohm (DC to 5KHz)	3
PCU-induced spikes at PCU end of cable	<150 mV peak at 25 MHz	<150 mV peak at 25 MHz	<150 mV peak at 25 MHz	<150 mV peak at 25 MHz	
PCU-induced ripple at PCU end of cable	<20 mV peak	<20 mV peak	<20 mV peak	<20 mV peak	4

Table 3.2.2.3 PCU Output Characteristics

Notes

1. At specified nominal DC load current
2. In this context, "DC" means for time periods longer than 5 secs.
3. Represents load regulation at PCU, i.e. 1 mV per 10 mA (max)
4. Over a bandwidth of 0-5 MHz

3.2.2.4 TSS Fault Tolerance

The TSS shall not be damaged by the unannounced removal of power. Neither the PSS nor the TSS shall be damaged by the grounding of any of the interface lines between them. The PCU shall not be damaged by the shorting of any output line to any other output line or to ground.

3.2.2.5 PCU-to-TEU Power Interface Characteristics

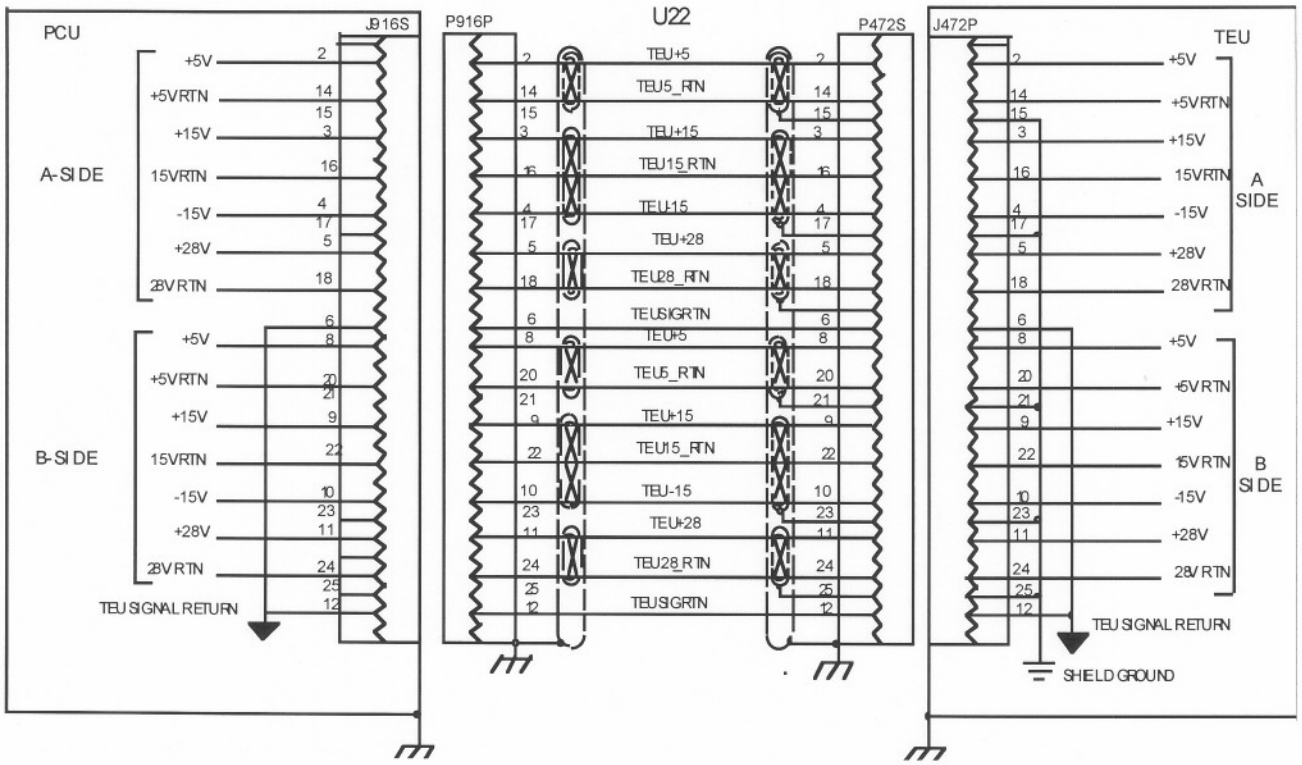

Figure 3.2.2.5-1 PCU-to-TEU Interconnect Diagram

3.2.2.6 PCU-to-EAA Power Interface Characteristics

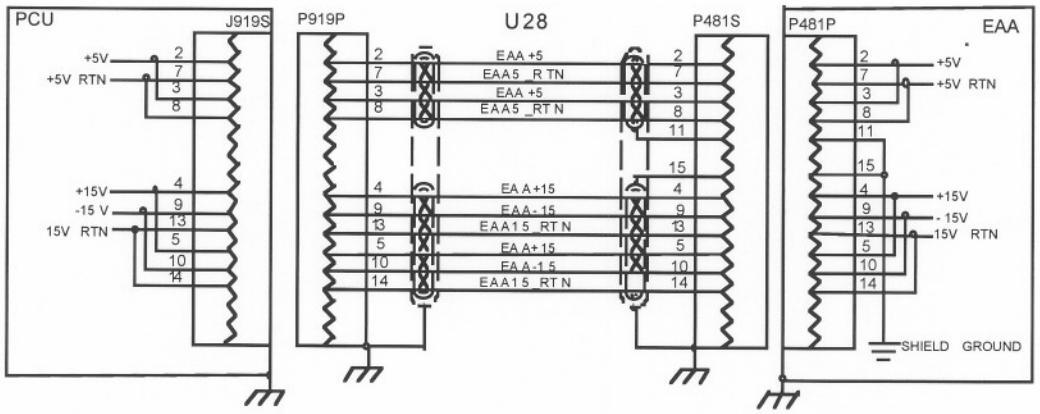

Figure 3.2.2.6-1 PCU-to-EEA Interconnect Diagram

3.2.3 Control and Data

See TC-UCB-009 (Inter-Subsystem Control & Data Interfaces Workbook)

3.2.4 Analog Monitors

N/A

3.2.5 Physical Electrical Interface

3.2.5.1 Connector Definition

Connectors hard mounted on boxes or the structure are referred to as "receptacles" and will have the letter "J" preceding the connector number. Connectors located on harnesses, cables or wires will be referred to as "plug and the letter "P" will precede the connector number. The letter "S" or "P" at the end of the connector specifies contact type; "P" for pin and "S" for socket.

3.2.5.2 Connector Assignment

The PCU-to-TSS interface shall utilize the following connectors:

PCU-to-TEU:

PCU Receptacle: J916S (311P409-3S-B12)	Mating Plug: P916P (311P409-3P-B12)
TEU Receptacle: J472P (311P409-3P-B12)	Mating Plug: P472S (311P409-3S-B12)

PCU-to-EEA:

PCU Receptacle: J919S (311P407-1S-B12)	Mating Plug: P919P (311P407-1P-B12)
EAA Receptacle: J481P (311P407-1P-B12)	Mating Plug: P481S (311P407-1S-B12)

3.2.5.3 PCU-to-TEU Connector Pin Assignments

P916P	311P409-3P-B12	Cable U20 (PCU to TEU)					P472S	311P409-3S-B12
J916S	311P409-3S-B12						J472P	311P409-3P-B12
PIN	SIGNAL NAME	TYPE	Vmax	Imax	Group	WIRE	Dest.	FUNCTION
			Volts	Amps		TYPE	on P916P	
1	Blank						1	Blank
2	A_TEU_+5_PWR	Power	5	1	T2-1A	22NG-2	2	TSS TEU +5 Volt Power
3	A_TEU_+15_PWR	Power	15	0.5	T3-1A	22NG-3	3	TSS TEU +15 Volt Power
4	A_TEU_-15_PWR	Power	15	0.5	T3-1B	22NG-3	4	TSS TEU -15 Volt Power
5	A_TEU_+28QC_PWR	Power	28	1.2	T2-2A	22NG-2	5	TSS TEU +28 Volt Power
6	TEUSIGRTN	Power					6	TSS TEU Signal Return
7	Blank						7	
8	B_TEU_+5_PWR	Power	5	1	T2-3A	22NG-2	8	TSS TEU +5 Volt Power
9	B_TEU_+15_PWR	Power	15	0.5	T3-2A	22NG-3	9	TSS TEU +15 Volt Power
10	B_TEU_-15_PWR	Power	15	0.5	T3-2B	22NG-3	10	TSS TEU -15 Volt Power
11	B_TEU_+28QC_PWR	Power	28	1.2	T2-4A	22NG-2	11	TSS TEU +28 Volt Power
12	TEUSIGRTN	Power					12	TSS TEU Signal Return
13	Blank						13	Blank
14	A_TEU_5_RTN	Pwr Rtn		1	T2-1B	22NG-2	14	TSS TEU +5 Volt Power Return
15	TEU5SHLDA						15	TSS TEU 5V Shield A
16	A_TEU_15_RTN	Pwr Rtn		0.5	T3-1C	22NG-3	16	TSS TEU +15 Volt Power Return
17	TEU15SHLDA						17	TSS TEU 15V Shield A
18	A_TEU_28_RTN	Pwr Rtn		1.2	T2-2B	22NG-2	18	TSS TEU +28 Volt Power Return
19	TEU28VSHLDA						19	TSS TEU 28V Shield A
20	B_TEU_5_RTN	Pwr Rtn		1	T2-3B	22NG-2	20	TSS TEU +5 Volt Power Return
21	TEU5SHLDB						21	TSS TEU 5V Shield B
22	B_TEU_15_RTN	Pwr Rtn		0.5	T3-2C	22NG-3	22	TSS TEU 15 Volt Power Return
23	TEU15SHLDB						23	TSS TEU 15V Shield B
24	B_TEU_28_RTN	Pwr Rtn		1.2	T2-4B	22NG-2	24	TSS TEU 28 Volt Power Return
25	TEU28VSHLDB						25	TSS TEU 28V Shield B
	TEUCHASSIS							Overall Shield to Chassis

Table 3.2.5.3-1 PCU-to-TEU Connector Pin Assignments

3.2.5.4 PCU-to-EEA Connector Pin Assignments

P919 P	**311P407-1P-B12**	**Cable U28 (PCU to EAA)**					**P481S**	**311P407-1S-B12**
J919S	311P407-1S-B12						J481P	311P407-1P-B12
PIN	SIGNAL NAME	TYPE	Vmax	Imax	Group	WIRE	Dest.	FUNCTION
			Volts	Amps		TYPE	on P481	
1	Blank						1	Blank
2	EAA_+5	Power	6		T4-1A	24NG-2	2	TSS EAA +5V Power
3	EAA_+5	Power	6		T4-1B	24NG-2	3	TSS EAA +5V Power
4	EAA_+15	Power	17		T3-1A	24NG-3	4	TSS EAA +15V Power
5	EAA_+15	Power	17		T3-2A	24NG-3	5	TSS EAA +15V Power
6	Blank						6	Blank
7	EAA_5_RTN	Pwr Rtn			T4-1C	24NG-2	7	TSS EAA +5V Power Return
8	EAA_5_RTN	Pwr Rtn			T4-1D	24NG-2	8	TSS EAA +5V Power Return
9	EAA_-15	Power	-17		T3-1C	24NG-3	13	TSS EAA -15V Power
10	EAA_-15	Power	-17		T3-2C	24NG-3	14	TSS EAA -15V Power
11	Blank						11	TSS EAA 5V Shield
12	Blank						12	TSS EAA 5V Shield A
13	EAA_15_RTN	Pwr Rtn			T3-1B	24NG-3	9	TSS EAA 15V Power Return
14	EAA_15_RTN	Pwr Rtn			T3-2B	24NG-3	10	TSS EAA 15V Power Return
15	Blank						15	TSS EAA 15V Shield B
	U28CHASSIS							Overall Shield to Chassis

Table 3.2.5.4-1 PCU-to-EEA Connector Pin Assignments

3.3 FUNCTIONAL INTERFACE

See TC-UCB-009 (Inter-Subsystem Control & Data Interfaces Workbook)

3.4 MECHANICAL INTERFACE

N/A

3.5 THERMAL INTERFACE

N/A

3.6 OPTICAL INTERFACE

N/A

3.7 ELECTRICAL BONDING

N/A

3.8 OTHER INTERFACES

N/A

UNCONTROLLED FOR REFERENCE USE ONLY

P211S	**311P407-1S-B12**	**Part of Cable U12 (SSH/HRM to IPU)**					**P728P**	**311P407-4P-B12**
J211P	311P407-1P-B12						J728S	311P407-4S-B12
PIN	SIGNAL NAME	TYPE	Vmax Volts	Imax Amps	Group	WIRE TYPE	Dest.	FUNCTION
1	A_HRM_HWA	Voltage	31		T4-1A	*	16	HRM HWA A
2	B_HRM_HWA	Voltage	31		T4-1C	*	17	HRM HWA B
3	Blank							
4	SSH_CHASS_GND							
5	Blank							
6	B_HRM_HWA_RTN				T4-1D	*	38	HRM HWA B Return
7	A_SSH_MOT_Y	Pulse	28		T3-2B	**	39	SSH Drive Motor A Phase A (Yel)
8	A_SSH_MOT_SHD							SSH Drive Motor A Shield
9	B_SSH_MOT_Y	Pulse	28		T3-3B	**	41	SSH Drive Motor B Phase A (Yel)
10	B_SSH_MOT_SHD							SSH Drive Motor B Shield
11	A_HRM_HWA_RTN				T4-1B	*	37	HRM HWA A Return
12	A_SSH_MOT_R	Pulse	28		T3-2A	**	18	SSH Drive Motor A Phase B (Red)
13	A_SSH_MOT_W	Pulse	28		T3-3C	**	40	SSH Drive Motor A Phase C (Wht)
14	B_SSH_MOT_R	Pulse	28		T3-3A	**	20	SSH Drive Motor B Phase B (Red)
15	B_SSH_MOT_W	Pulse	28		T3-3C	**	42	SSH Drive Motor B Phase C (Wht)
	SSH_CHASS_GND							Overall Shield to Chassis
*	M27500-22SC4S23							
**	M27500-24SC5S23							
***	M27500-26SC3S23							
****	M27500-26SC5S23							
*****	M22759/33-26-9							